M. KESSLER.

FILTER.

APPLICATION FILED AUG. 13, 1919.

1,410,017. Patented Mar. 21, 1922.

4 SHEETS—SHEET 1.

Fig. 1

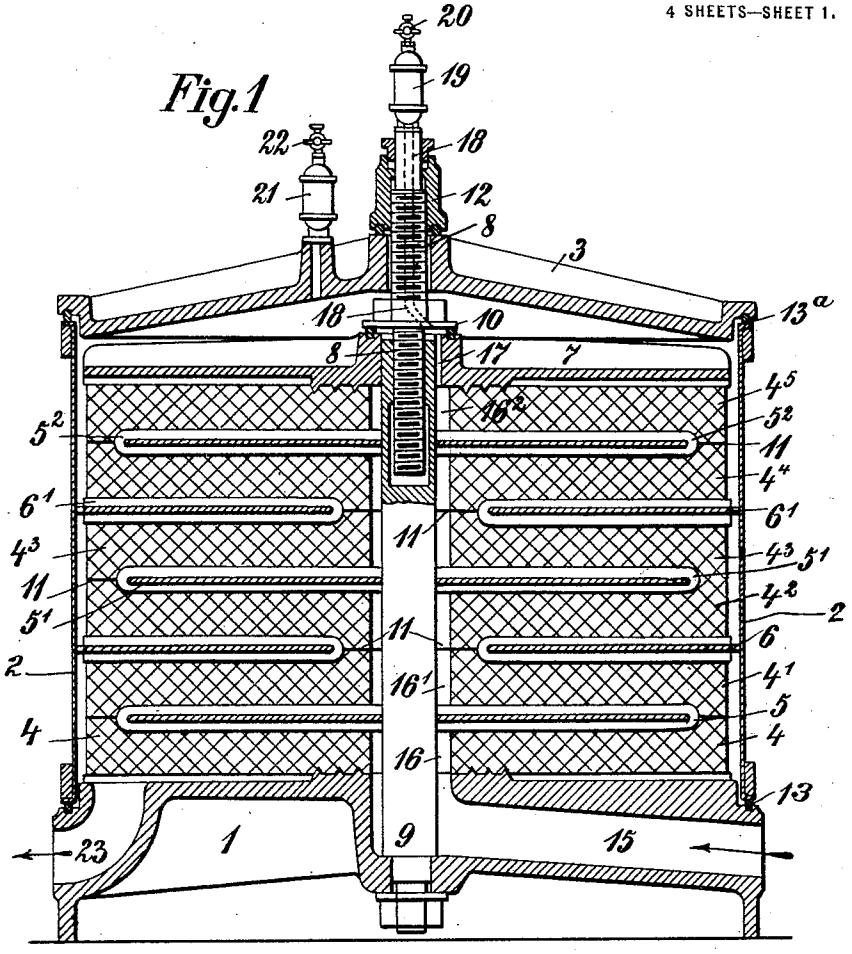

Fig. 2

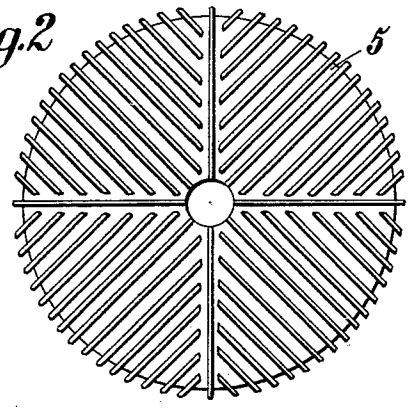

Fig. 3

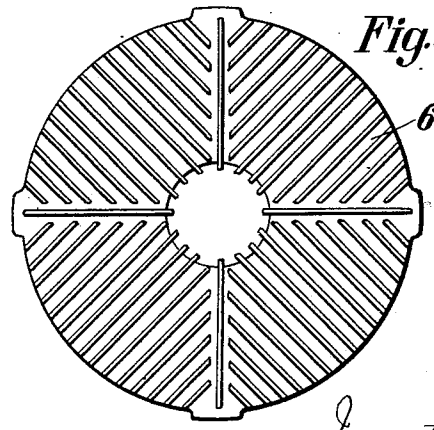

Inventor.

Max Kessler,

By Henry Orth & Co.

Atty.

M. KESSLER.

FILTER.

APPLICATION FILED AUG. 13, 1919.

1,410,017.

Patented Mar. 21, 1922.

4 SHEETS—SHEET 2.

Fig. 4

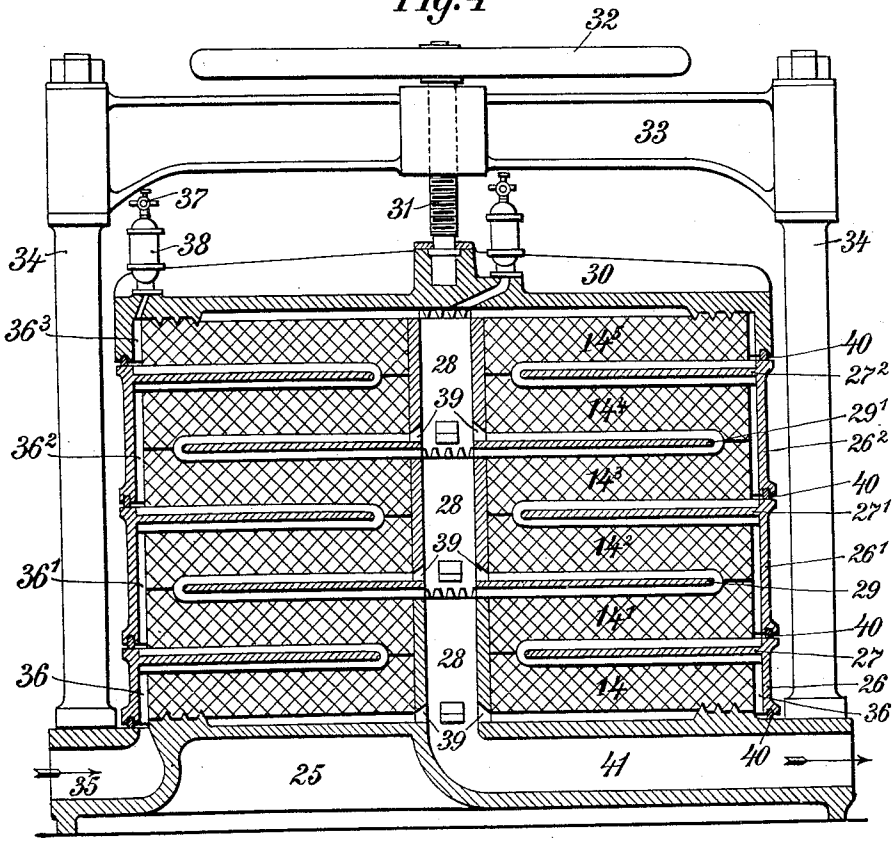

Fig. 5

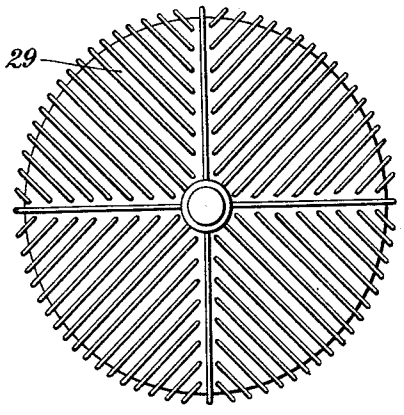

Fig. 6

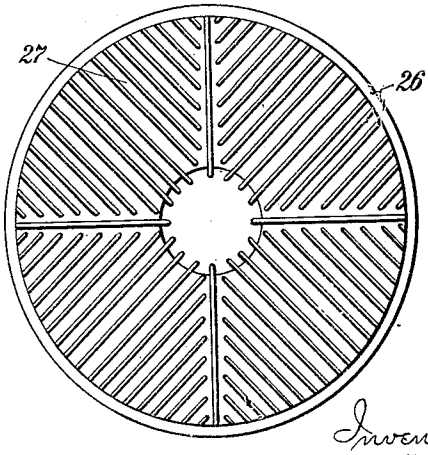

Inventor,
Max Kessler,
By Henry Orth & Co
Atty.

M. KESSLER.

FILTER.

APPLICATION FILED AUG. 13, 1919.

1,410,017. Patented Mar. 21, 1922.

4 SHEETS—SHEET 3.

Fig. 7

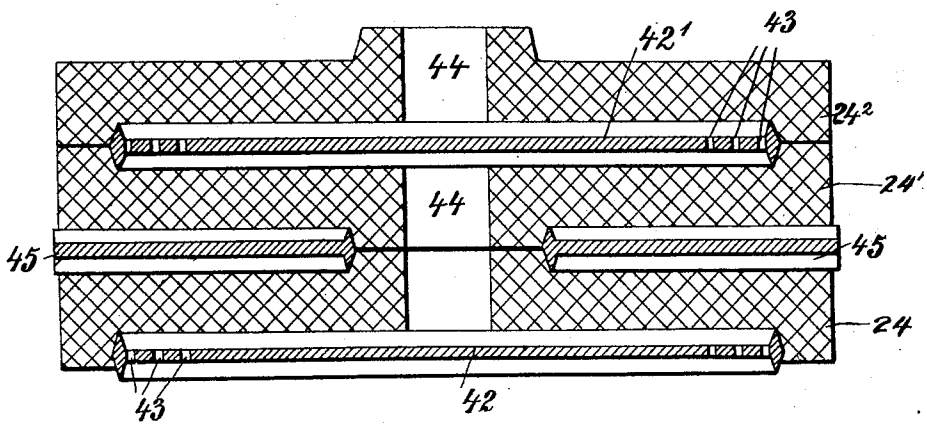

Fig. 8

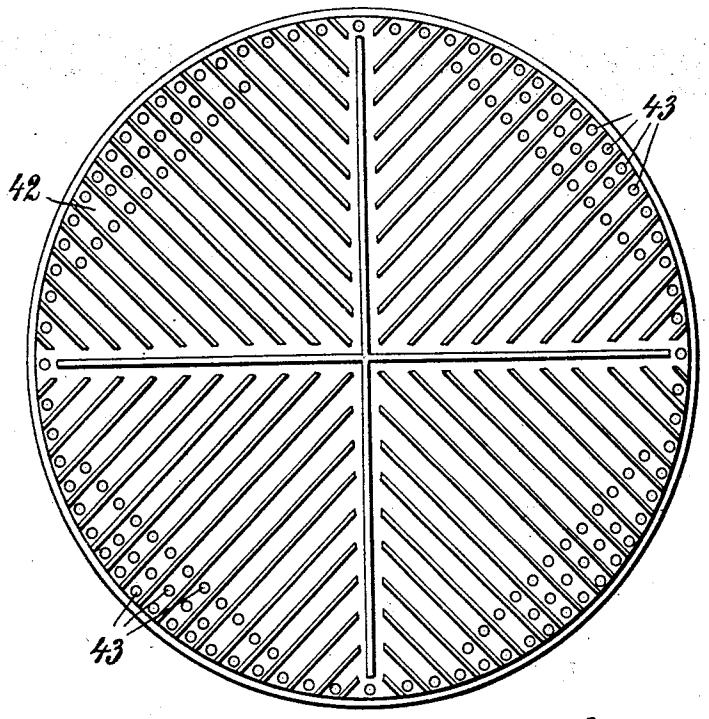

Inventor
Max Kessler,
By [signature] Atty.

M. KESSLER.

FILTER.

APPLICATION FILED AUG. 13, 1919.

1,410,017.

Patented Mar. 21, 1922.

4 SHEETS—SHEET 4.

Fig. 9

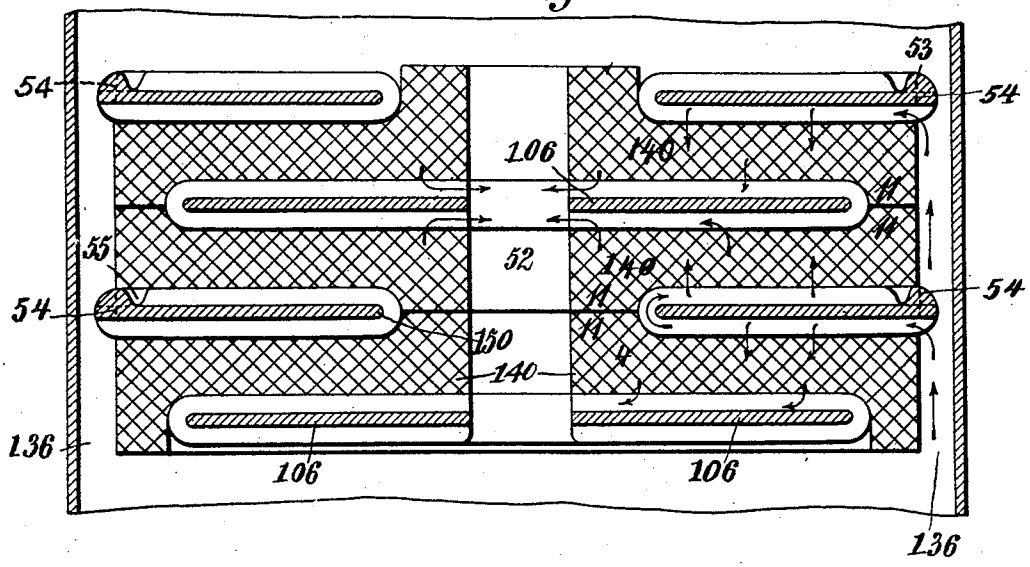

Fig. 10

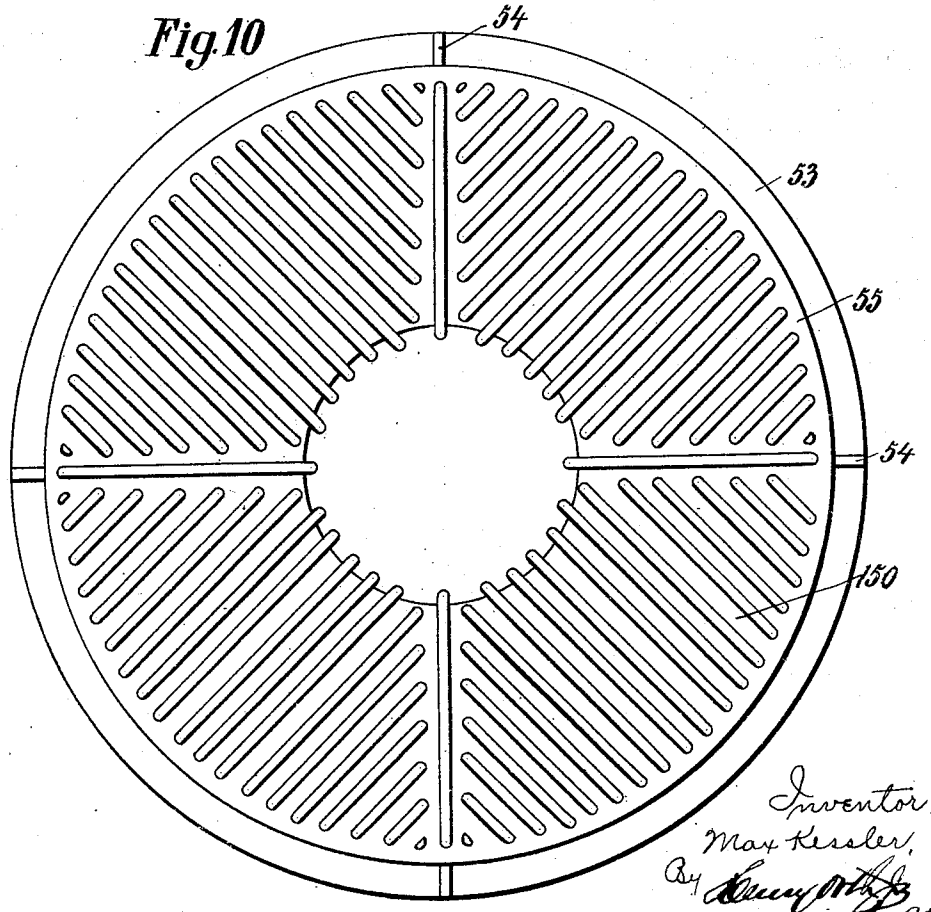

Inventor.
Max Kessler.
By [illegible] Atty.

UNITED STATES PATENT OFFICE.

MAX KESSLER, OF MANNHEIM, GERMANY.

FILTER.

1,410,017. Specification of Letters Patent. Patented Mar. 21, 1922.

Application filed August 13, 1919. Serial No. 317,296.

To all whom it may concern:

Be it known that I, MAX KESSLER, a subject of the King of Bavaria, residing at 39 Meerlachstrasse, Mannheim, Germany, have invented certain new and useful Improvements in Filters, (for which I have filed applications in Germany, Sept. 21, 1917; and addition, Nov. 20, 1917;) and I do hereby declare the following to be a full, clear and exact description of the invention.

My present invention pertains to filters, the objects, construction and advantages of which will be hereinafter set forth, reference being had to the annexed drawings, in which Figure 1 is a vertical sectional view of the filter; Fig. 2 a plan view of an inlet-distributing plate; Fig. 3 a plan view of a discharge-collecting plate; Fig. 4 a vertical sectional view of a filter, composed of single shells; Fig. 5 a plan view of an inlet-distributing plate of this filter; Fig. 6, a plan view of a discharge-collecting plate, cast in one piece with the shell; Fig. 7 a vertical sectional view of a further modification; Fig. 8 a plan view of an inlet-distributing plate of this filter; Fig. 9 a vertical sectional view of a further modification, the inlet-distributing plates of which are provided on the edge with a circular projection on one side, and Fig. 10 a plan view of an inlet-distributing plate of this filter.

In the heretofore known filters, having filter layers, arranged one above the other, inlet-distributing plates and discharge collecting plates, provided on the upper and under side with ribs, being inserted alternately between the filter layers, the liquid was fed simultaneously to all inlet-distributing plates from a common inlet channel, so that all distributing plates were connected "parallel" to each other.

The air, enclosed between the inlet-distributing plates and the filter layers was forced through the filter layers whereby these layers were damaged, or it was conducted off through a special channel, arranged near to the central channel for leading off the filtered liquid.

According to the present invention the air is removed in a simple and efficient manner in that the liquid is not fed simultaneously to all inlet-distributing plates from a common inlet channel, but is fed successively in such a manner to the distributing-plates, arranged in "series" that it flows wholly or partly over both sides of each inlet distributing plate. In consequence of which air or gas bubbles cannot be accumulated in any interstice but they are carried away from one distributing place to the next, until they come finally to a sight glass, from which they are removed by opening a cock or a discharge valve.

In the filter shown in Fig. 1 the casing consists of the base plate 1, the cylindrical mantle 2 and the cover plate 3. The filter layers, the inlet-distributing plates and the discharge collecting plates are arranged in the casing in the following manner:

On the base plate 1 is placed a filter layer 4 upon this an inlet distributing plate 5, on this a filter layer 4′, on this a discharge collecting plate 6, and in this order, according to the size of the filter, the filter layers 4^2, 4^3, 4^4 and 4^5 the inlet distributing plates and the discharge collecting plates are placed in the casing. The cover plate 7 is placed on the top filter layer 4^5. Pressure is exerted on all the filter layers by the cover plate 7, which is depressed by means of a nut 10 working on a threaded spindle 8, mounted in a vertical axially arranged shaft 10 which is fixed in base plate 1 and extends up through the casing. The filter layers are formed at their inner and outer edges on opposite sides with projections 11, which extend past the outer edges of the distributing plates 5 and the inner edges of the discharge collecting plates 6. As the projections of adjacent layers are in contact with each other said layers form a continuous zig-zag filtering path.

When the filter layers are compressed as required by the cover plate 7, the mantle 2 of the casing is put on the base plate 1, a packing ring 13 being inserted between the mantle and the base plate. The casing is then closed, by the cover 3, a packing ring 13 being inserted between the cover and the mantle 2. The cover 3 is pressed down by the nut 12 against the packing ring 13^a and the mantle 2, so that the casing is made tight in all parts.

The liquid to be filtered is fed through the channel 15 of the base plate 1 and passes by the central annular channel 16 to the lower inlet distributing plate 5, firmly enclosing the central fixed shaft 9. The liquid therefore flows around the distributing plate 5, first on the under side from the center to the periphery and then on the upper side from the periphery to the center. The

liquid then enters section 16′ of the central annular channel and reaches the second distributing plate 5′, flows around this plate in the same manner as before described, and in the same manner around the following distributing plate 5^2.

By the liquid flowing in this way around the ribbed distributing plates the air, being between the ribs and filter layers is not enclosed, but carried with the liquid into the upper part 16^2 of the central annular channel and passes through the channel 17 of the pressing plate 7 and the channel 18 of the spindle 8 into the sight glass 19. From this glass the air escapes by a cock 20, which is opened at the beginning of the process, while it is closed when liquid enters into the glass 19.

The liquid is filtered by passing from the distributing plates 5 through the filter layers 4 to the discharge collecting plates 6. These plates 6 are provided on both sides with ribs, in the same manner as the distributing plates 5. The filter layers are supported by the ribs and the liquid is conducted in the channels between the ribs.

The filtered liquid passes from the discharge collecting plates 6 into the outer collecting chamber between the cylindrical mantle 2, the periphery of the filter layers, 4, 4′, 4^2 . . . 4^5, and the cover plate 7 and cover 3. On the latter is arranged a sight glass 21, provided with an air cock 22, for the escape of the air from the outer collecting chamber. In the lower end of this chamber the discharging channel 23 is provided from which the filtered liquid is discharged.

The filter, shown in Fig. 4, is built up of single filter shells. The path of the liquid in this filter is opposite to that of the first described filter, the liquid being fed to the outer chamber of the casing and drawn off from the central channel. This filter is constructed as follows:

On the base plate 25, provided with supporting ribs is placed a filter layer 14 and a surrounding filter shell 26, provided in its upper part with a ribbed plate 27, having a large central opening. On this plate is placed the following filter layer 14′. In the central openings of these filter layers is placed a bushing 28. On this bushing is put the collecting plate 29 and on this the following filter layer 14^2. Then the second filter shell 26′ with the distributing plate 27′ is brought in place and so on. On the last distributing plate 27^2 of the filter shell 26^2 is put a filter layer 14^5 and on this the cover 30. By means of a screw spindle 31, provided on its upper end with a hand wheel 32 the cover 30 is pressed down until the filter shells 26, 26′ and 26^2 by packing rings 40 are tightened against each other as well as against the base plate 25 and the cover 30, For this purpose the screw spindle 31 is arranged in the traverse 33, connected by rods 34 with the base plate.

The liquid to be filtered, enters through the channel 35 of the base plate 25, rises in the under part 36 of the outer annular channel, formed by the periphery of the filter layers 14 and the filter shell 26 until it reaches the first distributing plate 27. The liquid then flows around this plate, first on the under side from the periphery to the center, then on the upper side from the center to the periphery and enters in the following part 36′ of the outer annular channel of the second filter shell 26′. In this manner the liquid flows around all distributing plates 27 and carries the air, from between the supporting ribs of these plates and the filter layers along with it. The air is then discharged in a known manner through the air cock 37 of the sight glass 38.

As there is a difference of pressure between the distributing plates 27 and the collecting plate 29, the unfiltered liquid is filtered by flowing through the filter layers to the collecting plates 29. The liquid then passes through channels 39 of the bushing 28 into the central collecting channel, formed by the bushings 28 and leaves the filter through the discharge channel 41 of the base plate 25.

In Figs. 7 and 8 a modification is shown, in which the distributing plates 42 are provided on the periphery with an outer rib and are perforated near this rib. In this arrangement the liquid flows on the under side of the plates 42 from the center to the periphery and is fed through the openings 43 to the upper side of the plate and to the inner central channel 44, which is formed by the central openings of the filter layer 24.

It will be understood, that the distributing plates may have a greater or lesser number of openings 43, than shown in Fig. 8, as even a small movement of the liquid, flowing continuously from the entrance to the upper part of the filter, will be sufficient to carry the air along with it. This movement can also be obtained by using distributing plates, which allow one part of the liquid to flow directly to the following plate, so that only a small part of the liquid will flow over all sides of the distributing plates.

This may be effected, by arranging on that edge of the distributing plates, which is in connection with the inlet channel, a restriction of the free passage.

A filter of this construction, in which the liquid is fed through the outer ring channel and is discharged from the central channel, is shown in Fig. 9 in vertical section. Fig. 10 is a plan view of a distributing plate.

The ribbed distributing plate 150 reaching with its outer edge into the outer circular feeding channel 136 of the filter, is provided on its edge on the upper side with

a circular projection 53, which may have the same height as the ribs. This projection is interrupted by radial slits 54. The supporting ribs of the distributing plate 150 do not touch the circular projection 53, so that at the inner edge of the projection there remains a circular channel 55, connecting the channels between the ribs. The liquid therefore can flow from one channel into the others and is distributed as required.

In starting the filter the unfiltered liquid rises in the outer annular space 136, surrounding the filter layers 140 and the distributing plates 150, and flows on the under side of these plates between the ribs of the same and the filter layer 140. In its further passage the liquid flows around the inner edge of the plate and over the upper side of the same to the annular channel 55, carrying with it the air, from the space between the ribs of the distributing plates. This air escapes through the slits 54 and rises in the outer annular space 136, from the upper end of which it is discharged in a known manner. It does not matter if a small quantity of liquid enters through the slits 54 to the ribs of the upper side of the distributing plates. The main stream has the opposite direction, so that the air is driven to the annular channel 55 and can escape through the slits 54 into the outer annular space 136.

During filtration the liquid flows from the distributing plates 150 through the filter layers 140 to the collecting plates 106, the inner edge of which reaches the (not shown) central shaft. In all places, where liquid is taken away from a distributing plate 150, of course a new quantity of liquid flows to the plate, coming from the side opposite the circular projection 53, because here the liquid can enter without difficulty. Therefore during filtration a stream of liquid around the distributing plates 150 is maintained, so that all bubbles of air or gas are driven to the annular channel 55 and escape through the slits 54 to the outer annular space.

The same effect is obtained, when the annular projection 53 is arranged on the under side of the distributing plate 150. In a filter in which the liquid flows in an opposite direction, i. e., is fed through the central channel, while it is discharged out of the outer annular channel, the restriction is arranged on the inner edge of the distributing plates, reaching to the central channel. The effect is the same as in the first described arrangement.

I claim:

1. In a filter, a casing, spaced impervious inlet distributing plates and alternating impervious discharge collecting plates in said casing, filter elements included between said plates, said plates extending but partly over the area of the filter elements, and said filter elements having contacting portions beyond the edges of the plates to form a continuous zig-zag filtering path, means to supply the liquid to be filtered to the distributing plates, and means to collect liquid from the discharge plates.

2. In a filter, a casing, spaced circular, impervious inlet distributing plates and alternating impervious discharge collecting plates in said casing, said plates having ribs forming grooves extending to the peripheries thereof, and filter elements between the plates having circular contacting portions beyond the edge of said plates to form a continuous zig-zag filtering path.

3. In a filter, a casing, impervious inlet distributing plates and alternating impervious collecting and discharge plates, said plates having ribs on both sides, forming grooves terminating at their peripheries, filter elements between the plates, having contacting portions extending beyond the edges of the respective plates to form a continuous zig-zag filtering path, an inlet chamber communicating with said distributing plates, and a discharge chamber communicating with the discharge plates.

4. In a filter, a casing, inlet impervious distributing plates and alternating impervious collecting and discharge plates, said plates having ribs on both sides thereof forming grooves extending to the peripheries of the plates, the grooves on one side of a plate communicating with the grooves on the other side at the outer edge of the plate, and filter elements included between the plates having portions extending past the edges of the plates to form a continuous zig-zag filtering path, a chamber common to all the distributing plates and a chamber common to all the collecting plates.

5. In a filter, a casing, inlet distributing plates and alternating discharge plates, filter elements between said plates, each element having a portion extending beyond the edge of an inlet plate and contacting with a portion extending beyond the edge of a discharge plate, thereby forming a continuous zig-zag filtering path, a central chamber extending through the casing and communicating with the distributing plates, air venting means for said chamber, a peripheral chamber between the casing and filter elements communicating with the discharge plates, and air venting means for said chamber.

6. In a filter, a casing, a central shaft mounted therein, impervious annular distributing plates in axial contact with the shaft, impervious annular discharge plates interposed between the distributing plates, the inner edges of the discharge plates being out of contact with the central shaft, thereby forming interior annular spaces be-

tween said edges and the shaft, said plates having ribs on both sides thereof forming grooves extending from their inner edges to the peripheries of the plates, and filtering elements between the plates extending beyond the peripheries of the distributing plates and beyond the inner edges of the discharge plates to form a continuous zigzag filtering path.

7. In a filter, a casing, a vertical shaft centrally mounted therein, impervious annular distributing plates, impervious annular discharge plates interposed between the distributing plates, the inner edges of the distributing plates, contacting with the shaft and the outer edges of the discharge plates contacting with the casing, said plates having ribs on both sides forming grooves extending from their inner to their outer edges, and filtering elements between the plates having contacting portions extending beyond the outer edges of the distributing plates and the inner edges of the discharge plates, said elements forming an inner annular chamber common to the distributing plates and an outer annular chamber common to the discharge plates.

8. In a filter, a casing, a centrally arranged vertical shaft mounted therein, a plurality of superposed filtering elements surrounding the shaft and cooperating with the shaft and casing to form inner and outer annular chambers, a plurality of impervious annular distributing plates between the filtering elements and having grooves formed in both faces communicating with the inner annular chamber, and a plurality of impervious annular discharge plates between the filtering elements alternating with the distributing plates and having grooves formed in both faces communicating with the outer annular chamber.

9. In a filter, a casing, a centrally arranged vertical shaft mounted therein, a plurality of superposed filtering elements surrounding the shaft and cooperating with the latter and casing to form inner and outer annular chambers, a plurality of impervious annular distributing plates interposed between the filtering elements, the inner edges of said plates dividing the inner chamber into separate compartments, ribs on both sides of said plates forming grooves communicating with said compartments, a plurality of impervious annular discharge plates interposed between the filtering elements and alternating with the distributing plates, the outer edges of the discharge plates dividing the outer annular chamber into separate compartments, ribs on both sides of the discharge plates forming grooves communicating with the last named compartments.

10. In a filter, a casing, a centrally arranged vertical shaft mounted therein, a plurality of superposed filtering elements surrounding the shaft and cooperating with the latter and casing to form inner and outer annular chambers, a plurality of impervious annular distributing plates interposed between the filtering elements, the inner edges of said plates dividing the inner chamber into separate compartments, ribs on both sides of said plates forming grooves communicating with said compartments, a plurality of impervious annular discharge plates interposed between the filtering elements and alternating with the distributing plates, the outer edges of the discharge plates dividing the outer annular chamber into separate compartments, ribs on both sides of the discharge plates forming grooves communicating with the last named compartments, an inlet conduit communicating with the bottom compartment of the inner annular chamber and an outlet conduit communicating with the bottom compartment of the outer annular chamber.

In testimony whereof I have signed my name to this specification, in the presence of two subscribing witnesses.

MAX KESSLER.

Witnesses:
G. A. Ott,
B. Pross.