US00D682259S

(12) United States Design Patent

Fahrendorff et al.

(10) Patent No.: US D682,259 S
(45) Date of Patent: ** *May 14, 2013

(54) **DEVICE SKIN**

(75) Inventors: **Anders Fahrendorff**, Ottawa (CA); **Ian James Murchison**, Toronto (CA)

(73) Assignee: **Research In Motion Limited**, Waterloo, Ontario (CA)

(*) Notice: This patent is subject to a terminal disclaimer.

(**) Term: **14 Years**

(21) Appl. No.: **29/389,884**

(22) Filed: **Apr. 18, 2011**

(51) **LOC (9) Cl.** **14-03**

(52) **U.S. Cl.**
USPC **D14/250**

(58) **Field of Classification Search** ... D14/203.3–203.7, D14/217, 496, 238.1, 240, 447, 137, 138 AA, D14/138 R, 138 G, 218, 341–347, 248, 250–253, D14/440; D3/103, 247, 201, 218, 269, 273, D3/301, 303; D13/103, 107–108, 119; 220/4.02; 248/309.1; 361/679.56, 679.3, 679.25, 816, 361/679.01, 679.55; 379/426, 433.11, 455, 379/437; 455/575.1, 575.8; 206/305, 320, 206/316.1, 724; 224/191, 197
See application file for complete search history.

(56) **References Cited**

U.S. PATENT DOCUMENTS

D302,177	S	*	7/1989	Evenson	D19/92
D597,089	S	*	7/2009	Khan et al.	D14/250
D600,908	S	*	9/2009	Richardson et al.	D3/218
D603,389	S	*	11/2009	Khan et al.	D14/250
D606,529	S	*	12/2009	Ferrari et al.	D14/250
D609,228	S	*	2/2010	Ferrari et al.	D14/250
D614,179	S	*	4/2010	Behar et al.	D14/248
D618,231	S	*	6/2010	Fahrendorff et al.	D14/250
D621,395	S	*	8/2010	Richardson et al.	D14/250
D624,533	S	*	9/2010	Richardson et al.	D14/250
D624,910	S	*	10/2010	Richardson et al.	D14/250
D638,410	S	*	5/2011	Khan et al.	D14/250
D644,216	S	*	8/2011	Richardson et al.	D14/250
D644,636	S	*	9/2011	Richardson et al.	D14/250
D644,639	S	*	9/2011	Weller et al.	D14/250
D648,717	S	*	11/2011	Fahrendorff et al.	D14/250
D649,538	S	*	11/2011	Magness et al.	D14/250
D652,031	S	*	1/2012	Fahrendorff et al.	D14/250
D653,656	S	*	2/2012	Charnas et al.	D14/250
D662,926	S	*	7/2012	Fahrendorff et al.	D14/250
2010/0104814	A1	*	4/2010	Richardson et al.	428/156

OTHER PUBLICATIONS

Review of BlackBerry Soft Shell Case for the BlackBerry Bold 9930 / 9900 by Kevin Michaluk, published on Aug. 29, 2011, <URL:http://crackberry. com/blackberry-soft-shell-case-blackberry-bold-9930-9900-review>, retrieved from internet on Sep. 2, 2012.*

(Continued)

Primary Examiner — Carla Jobe Wright

(57) **CLAIM**

We claim the ornamental design for a device skin, as shown and described.

DESCRIPTION

FIG. **1** is a front perspective view of a device skin;
FIG. **2** is a back perspective view of the device skin;
FIG. **3** is a back elevational view thereof;
FIG. **4** is a front elevational view thereof;
FIG. **5** is a right elevational view thereof;
FIG. **6** is a left elevational view thereof;
FIG. **7** is a top plan view thereof; and,
FIG. **8** is a bottom plan view thereof.

The broken lines shown in FIG. **5** depict environment of the device skin and form no part of the claimed design.

1 Claim, 6 Drawing Sheets

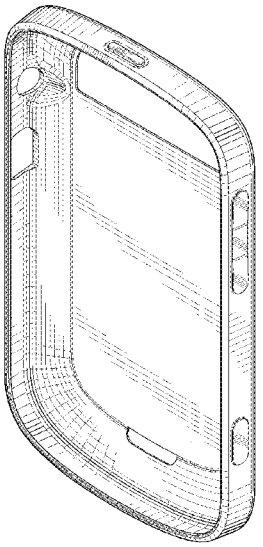

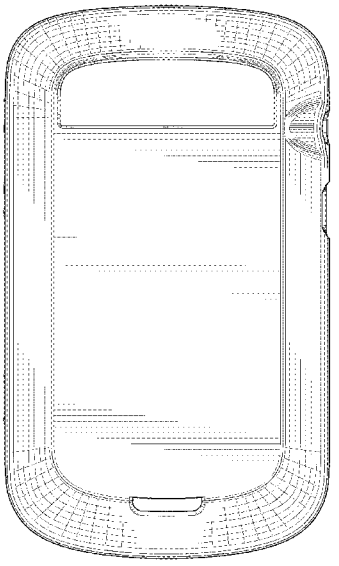

OTHER PUBLICATIONS

OtterBox Impact Series Case for BlackBerry Bold 9900 smartphone, <URL:http://www.otterbox.com/BlackBerry-Bold-9900-Impact-Series-Case/RBB1-9900S,default,pd. html?dwvar_RBB1-9900S_color=20&start=1&cgid=blackberry-bold-9900-casesf>, retrieved from internet on Sep. 2, 2012.*

BoxWave Blackberry Bold 9930 DuoSuit, Slim-Fit TPU Skin Case for Blackberry Bold 9930, <URL:http://www.buy.com/prod/boxwave-blackberry-bold-9930-duosuit-slim-fit-tpu-skin-case-for/228471364.htm>, retrieved from internet on Sep. 2, 2012.*

* cited by examiner

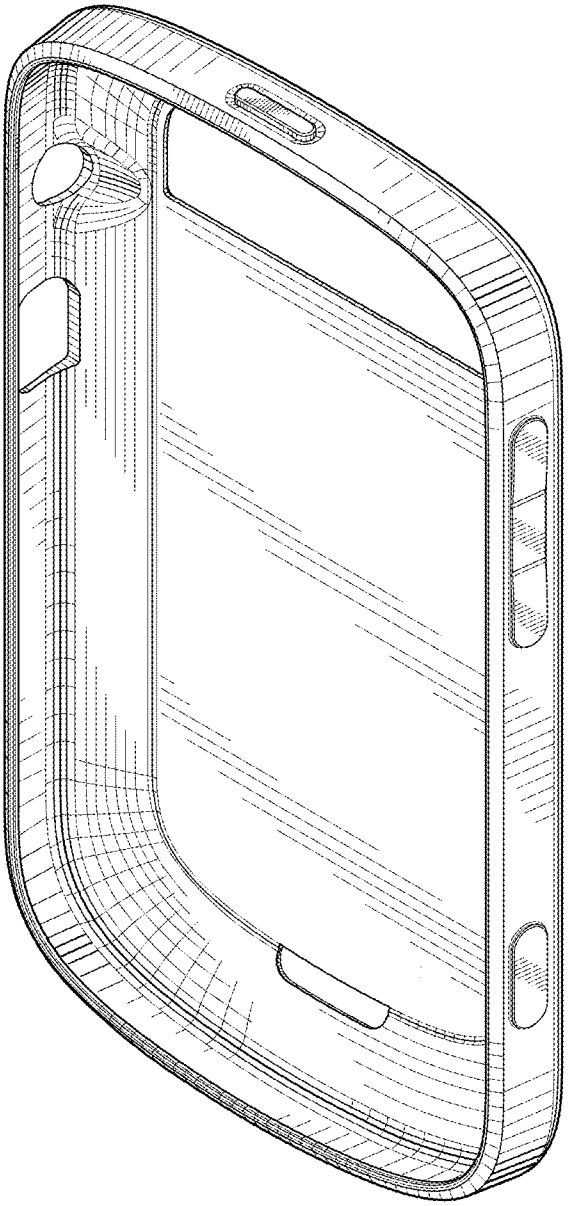

FIG.1

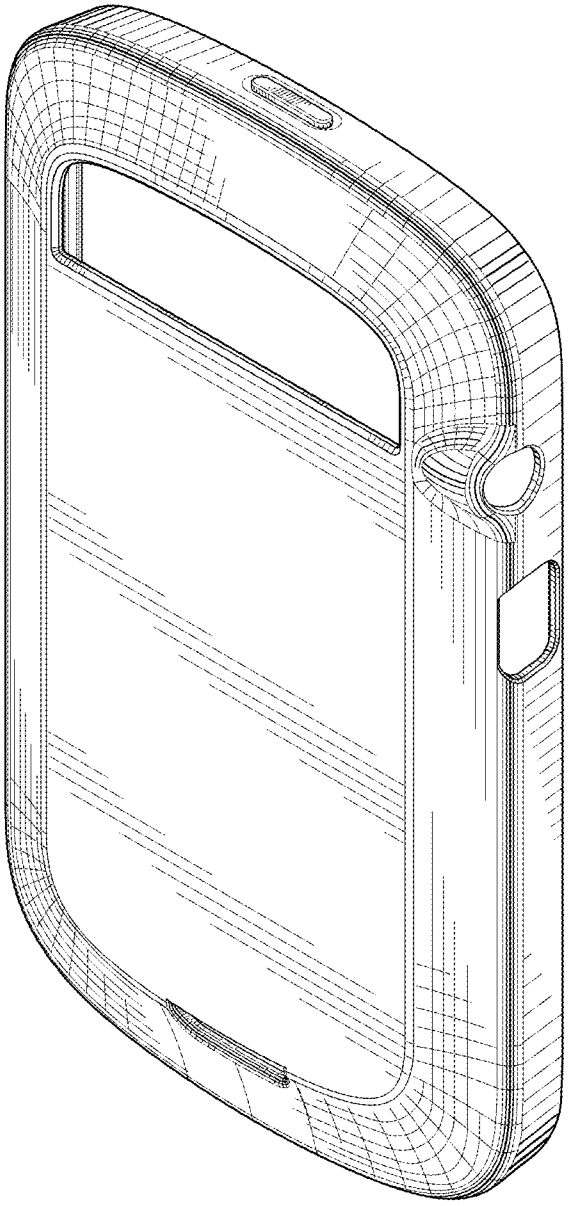

FIG.2

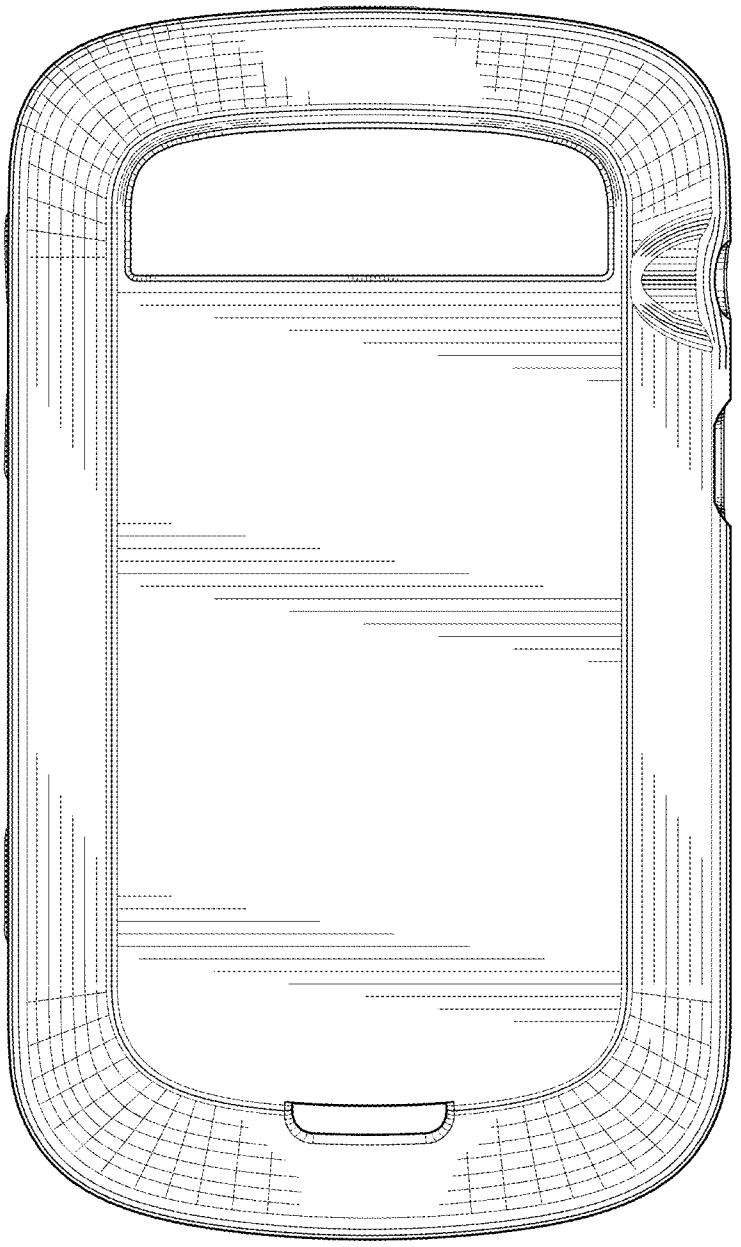

FIG.3

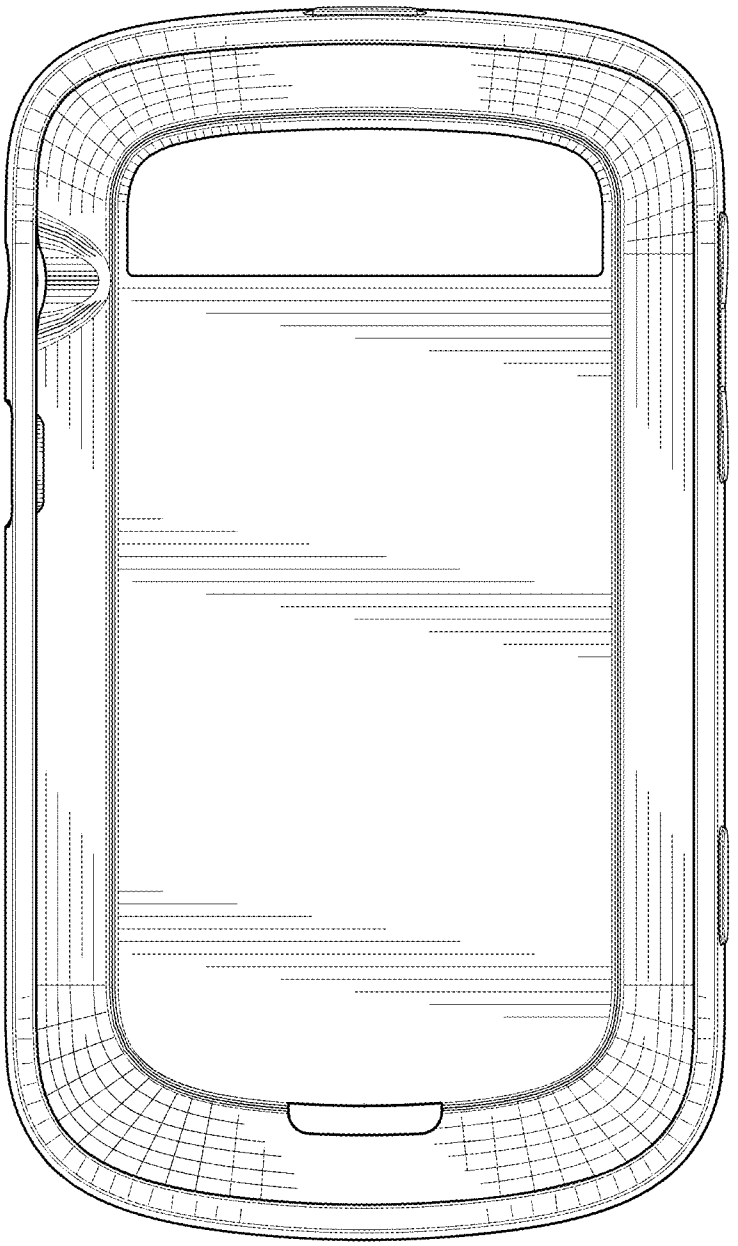

FIG.4

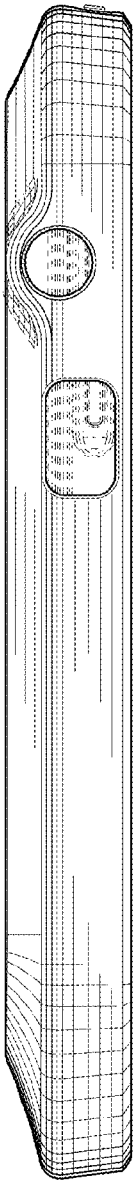

FIG.5

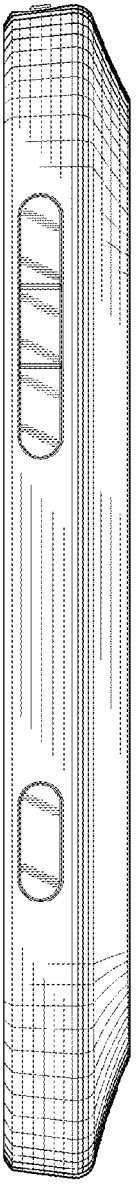

FIG.6

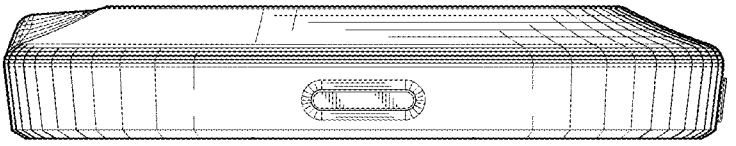

FIG.7

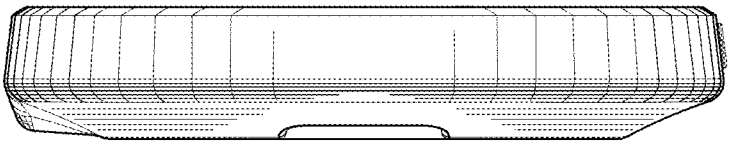

FIG.8