Feb. 27, 1962 A. W. HARKNESS 3,022,517

MECHANISM FOR SUSPENDING A FLUSH VALVE FROM THE TRIP LEVER

Filed Oct. 14, 1958

Fig.1

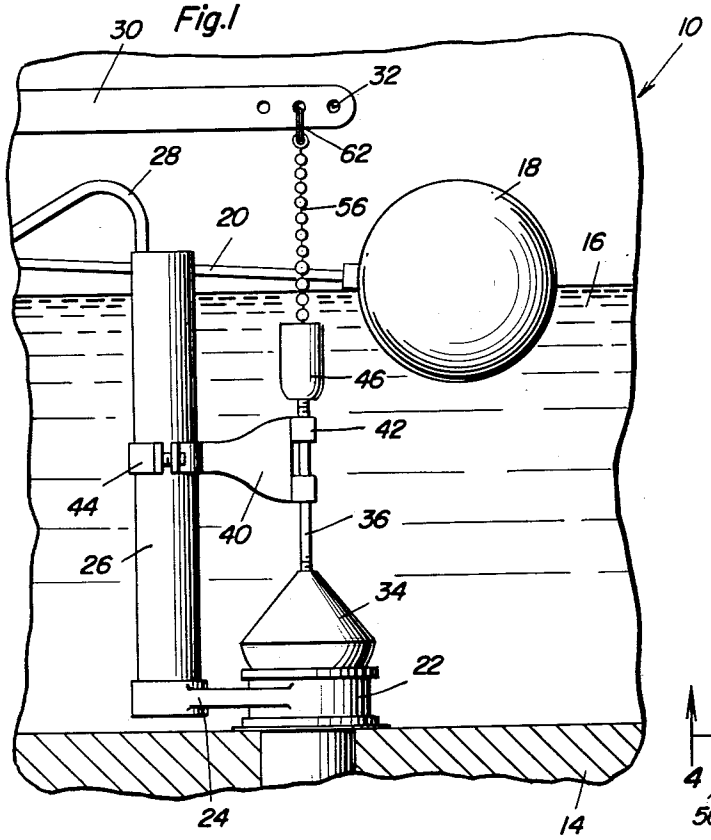

Fig.2

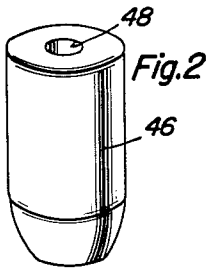

Fig.3

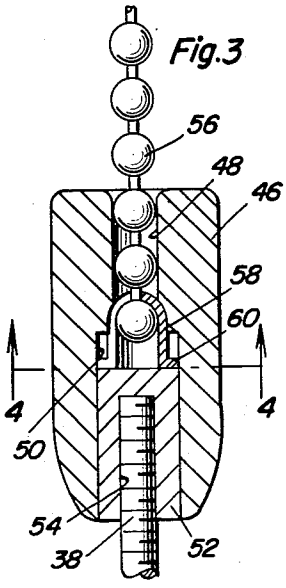

Fig.5

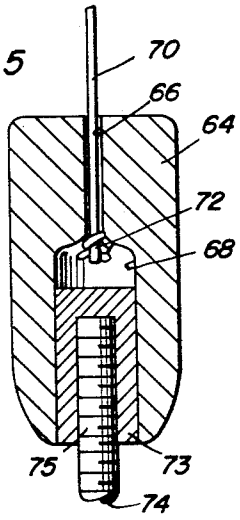

Fig.6

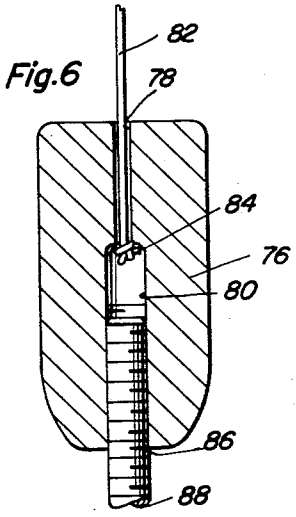

Fig.4

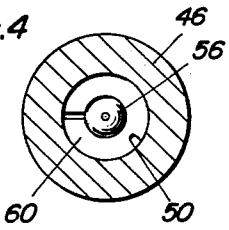

Andrew W. Harkness
INVENTOR.

BY Clarence A. O'Brien and Harvey B. Jacobson
Attorneys

United States Patent Office 3,022,517
Patented Feb. 27, 1962

3,022,517

MECHANISM FOR SUSPENDING A FLUSH VALVE FROM THE TRIP LEVER

Andrew W. Harkness, 36 Jackson Ave., South Glens Falls, N.Y.

Filed Oct. 14, 1958, Ser. No. 767,167
2 Claims. (Cl. 4—57)

The present invention generally relates to a novel interior construction in flush tanks and more particularly to a particular mechanism for suspending the usual flush valve from the trip lever.

In conventional flush tanks, the upstanding rod from the flush valve is supported in a guide and normally is provided with an eye on the top thereof. A second link of rigid wire is connected to the trip lever and is provided with an offset eye encircling the rod below the eye member on the top thus providing a lost motion connection between the valve rod and the wire rod suspended from the trip lever. This offset lift feature quite often caused binding and incomplete closing of the flush valve. Therefore, it is the primary object of the present invention to provide a novel mechanism for suspending the flush valve from the trip lever and more particularly to provide such a mechanism which is flexible and which has a novel means for attachment to the upper end of the valve rod.

A further object of the present invention is to provide a device in accordance with the preceding object which is simple in construction, easy to install, effective in operation and relatively inexpensive to manufacture.

These together with other objects and advantages which will become subsequently apparent reside in the details of construction and operation as more fully hereinafter described and claimed, reference being had to the accompanying drawing forming a part hereof, wherein like numerals refer to like parts throughout, and in which:

FIGURE 1 is a side elevational view of a portion of the interior of a flush tank illustrating the mechanism of the present invention installed therein;

FIGURE 2 is a perspective view of a portion of the invention;

FIGURE 3 is a vertical sectional view taken generally along the longitudinal center line of the mechanism for connecting the lift rod on the valve to the flexible lifting element;

FIGURE 4 is a transverse, sectional view taken substantially upon a plane passing along section line 4—4 of FIGURE 3;

FIGURE 5 is a sectional view similar to FIGURE 3 illustrating another form of the invention; and

FIGURE 6 is a sectional view similar to FIGURE 3 illustrating still another form of the invention.

Referring now specifically to the drawings, numeral 10 generally designates the flush tank including a bottom 14 and the usual supply of water 16 disposed therein which is controlled by a float member 18 mounted on one end of a float rod 20 for controlling the inlet valve. A discharge adapter and valve seat 22 is mounted on and extends through the bottom 14 and the adapter 22 is provided with a laterally offset portion 24 having the usual overflow pipe 26 extending upwardly therefrom for providing discharge for overflow of water in the event the float 18 does not work properly. Extending into the open upper end of the overflow pipe 24 is a refill tube 28 for refilling the commode after emptying in a manner well known. There is also provided a trip lever 30 connected to the usual handle for swinging movement in a vertical plane with the trip lever 30 having a series of apertures 32 in the free end thereof which generally are in the same vertical plane as the adapter 22.

Supported on the valve seat in the adapter 22 is the

usual hollow flush valve 34 having a vertical valve rod or stem 36 secured thereto in any suitable manner with the upper end of the stem 36 being externally screw threaded as indicated by the numeral 38. The valve rod 36 is slidably supported and orientated by a guide bracket 40 having a pair of loops 42 encircling the rod 36 and having a split clamp assembly 44 for rigidly and adjustably clamping the same onto the overflow pipe 26.

For connecting the threaded upper end 38 of the stem 36 with the trip lever 30, there is provided a main body of generally cylindrical configuration and designated by the numeral 46 which includes a longitudinal bore 48 extending into the same from the upper end thereof and a longitudinal bore 50 extending into the same from the lower end thereof with the bore 50 being larger than the bore 48. An insert 52 is disposed in the bore 50 and the insert 52 is provided with an internally threaded socket or blind bore 54 for detachably receiving the threaded end 38 of the valve rod 36. Extending into the bore 48 is the free end of a bead chain 56 which terminates adjacent the juncture between the bore 50 and the bore 48. A split and generally bell-shaped retainer 58 is mounted on the last bead of the beaded chain 56 and includes an outwardly extending peripheral flange 60 disposed in the larger bore 50 thereby preventing withdrawal of the beaded chain 56 from the body 46 inasmuch as the insert 52 is held securely in the bore 50. The other end of the beaded chain is secured to one of the apertures 32 by virtue of a spring ring 62 whereby the beaded chain 56 provides a flexible connection between the trip lever 30 and the body 46 as well as the rod 36 thereby providing an upward pull on the rod 36 generally in alignment with the longitudinal axis thereof.

FIGURE 5 illustrates a modified form of the present invention in which the main body is designated by the reference numeral 64 and includes a small longitudinal bore 66 communicating with the top surface thereof and an enlarged longitudinal bore 68 communicating with the bottom thereof with the bore 68 having an insert 69 receiving the threaded upper end 72 of a valve rod 74. The bore 66 receives a nylon coated wire 70 or equivalent material which is knotted as indicated by the numeral 72 at the lower end of the bore 66 thus securing the nylon covered wire 70 or similar device to the body 64.

FIGURE 6 illustrates another form of the invention in which the body is designated by the numeral 76 and which includes a small diameter bore 78 and a larger diameter bore 80. The smaller bore 78 receives a nylon covered wire 82 knotted as indicated by the numeral 84. The lower bore 80 receives directly the screw threaded end 86 of the valve rod 88.

In each instance, the valve rod is attached to a flexible lift member which is secured to the trip lever. The nylon wire is secured to the trip lever by threading through the several apertures appearing in the trip lever for securing the flexible nylon covered wire to the trip lever.

While the device may be constructed of various shapes and sizes, the device is contemplated being constructed principally of birch wood but may be constructed of various other materials such as plastic, hard rubber, sponge rubber or the like. The main body is approximately three quarter inch in diameter and may be approximately one and one-half inches long with the top of the same being flat and the lower part having about a 45° taper.

The foregoing is considered as illustrative only of the principles of the invention. Further, since numerous modifications and changes will readily occur to those skilled in the art, it is not desired to limit the invention to the exact construction and operation shown and described, and accordingly, all suitable modifications and

equivalents may be resorted to, falling within the scope of the invention as claimed.

What is claimed as new is as follows:

1. A device for suspending the vertical guided lift rod of a toilet tank flush valve from the trip lever comprising a flexible member adapted to be attached to the trip lever, a body member adapted to be rigidly attached to the upper end of the vertical lift rod, and flexible means connected to said body member and said flexible member whereby the forces exerted on the body member are transmitted through a flexible member and the flexible means, said body being provided with a small longitudinal bore communicating with the upper end thereof and a larger longitudinal bore communicating with the lower end thereof, said bores communicating and forming a shoulder, said flexible member extending through the smaller bore, said flexible means including an enlargement means on the inner end of the flexible member for engaging the shoulder defined by the juncture between the smaller and larger bore, said flexible member being in the form of a bead chain, said enlargement means including a split bell-shaped retainer engaging the last bead of the chain for mounting the chain on the body.

2. In combination with a flush tank having an overflow tube disposed vertically therein, a guide member mounted on the overflow tube, a flush valve ball having a stem extending upwardly therefrom and vertically guidingly received by said guide member, one end of said stem extending above the guide member and being threaded, a manually operated lift lever support from the tank and overlying the threaded end of the stem in spaced relation thereto, an enlarged solid body threadedly engaged with the threaded end of the stem, and a flexible

member interconnecting said body and the lift lever whereby lifting force exerted on the body will be through the flexible member, said body including a longitudinal bore extending therethrough in alignment with the stem and including an upper portion and a lower portion with the upper portion having a smaller diameter than the lower portion thereby forming a downwardly facing shoulder, and means on the end of said flexible member remote from the lift lever engaging the shoulder thereby transferring lifting force from the flexible member to the body, said shoulder being located intermediate the ends of the bore whereby the lifting force will be transferred to the body in spaced relation to the ends thereof, said threaded stem terminating adjacent said shoulder, said lift lever being provided with a plurality of longitudinally spaced apertures, said flexible member being attached to one of the apertures, a split ring member forming a connection between the flexible member and the lift lever for orientating the flexible member in alignment with the stem, said flexible member being in the form of a bead chain, said means on the end of the chain engaging the shoulder including a split, bell-shaped retainer engaging the last bead of the chain, said bell-shaped retainer having an outwardly extending bottom flange for reception in the upper end of the lower portion of the bore.

References Cited in the file of this patent

UNITED STATES PATENTS

297,455	Scott	Apr. 22, 1884
1,987,229	Curtin	Jan. 8, 1935
2,625,691	Clifton	Jan. 20, 1953
2,719,304	Schultz	Oct. 4, 1955
2,777,135	Harkness	Jan. 15, 1957