US 20060262236A1

(19) **United States**

(12) **Patent Application Publication** (10) **Pub. No.: US 2006/0262236 A1**

Abileah (43) **Pub. Date: Nov. 23, 2006**

(54) **REFLECTION RESISTANT TOUCH SCREENS**

(75) Inventor: **Adiel Abileah**, Portland, OR (US)

Correspondence Address:
CHERNOFF, VILHAUER, MCCLUNG & STENZEL
1600 ODS TOWER
601 SW SECOND AVENUE
PORTLAND, OR 97204-3157 (US)

(73) Assignee: **Planar Systems, Inc.**

(21) Appl. No.: **11/493,432**

(22) Filed: **Jul. 25, 2006**

Related U.S. Application Data

(62) Division of application No. 10/376,155, filed on Feb. 28, 2003.

(60) Provisional application No. 60/361,238, filed on Mar. 1, 2002.

Publication Classification

(51) **Int. Cl.**
G02F 1/1335 (2006.01)

(52) **U.S. Cl.** **349/12**

(57) **ABSTRACT**

A flexible, non-birefringent cover and a polarizer on the front of a resistive touch panel reduce touch screen image distortion and obscuration resulting from the reflection of ambient light. Reduced reflection of ambient light is also obtained by touch screens of alternative construction incorporating combinations anti-reflection panels and polarizers located behind the touch panel.

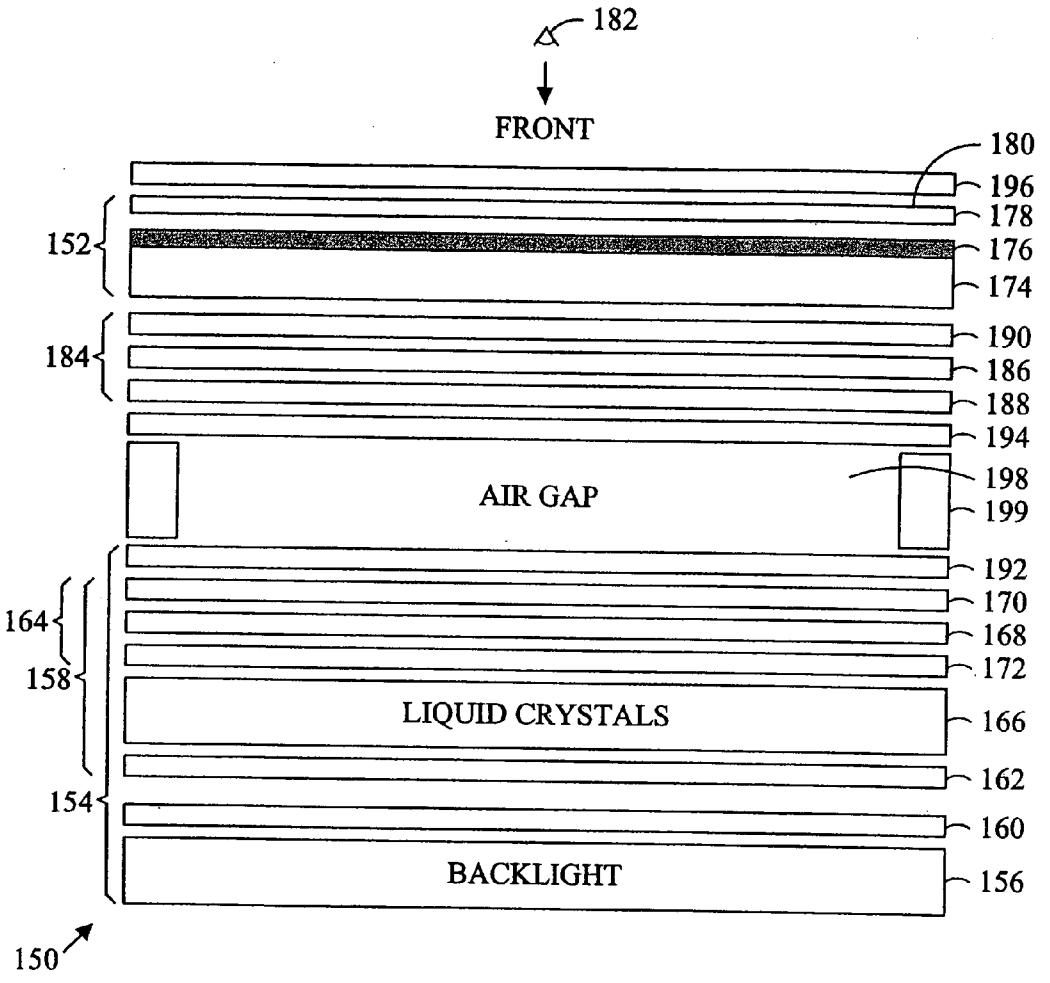

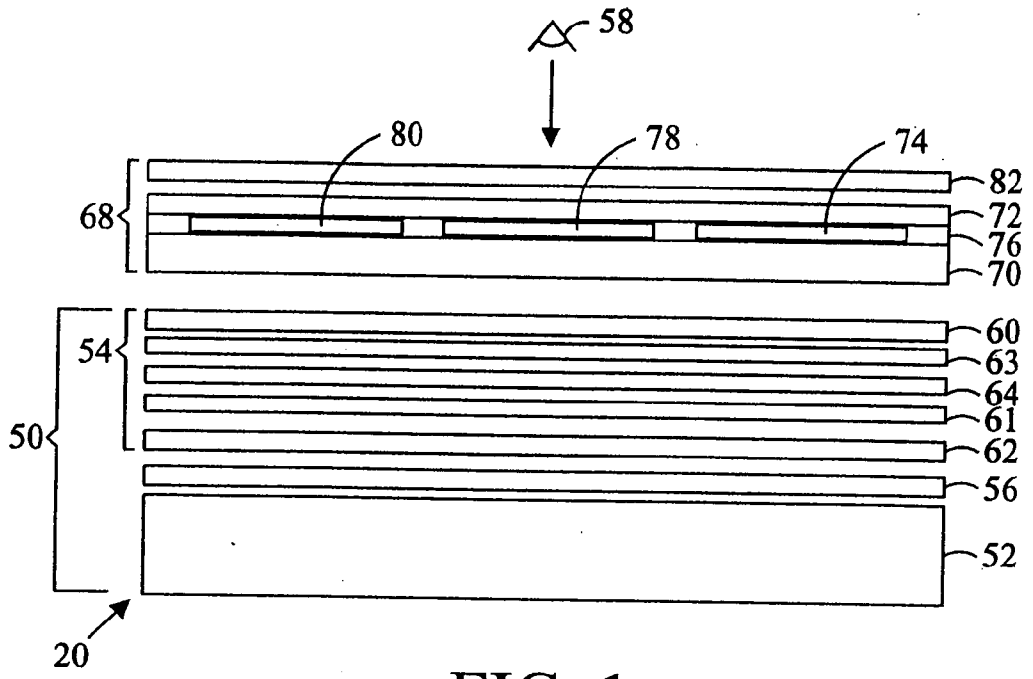
58
80
78
74
68
82
72
76
70
54
60
63
64
61
62
50
56
52
20

FIG. 1

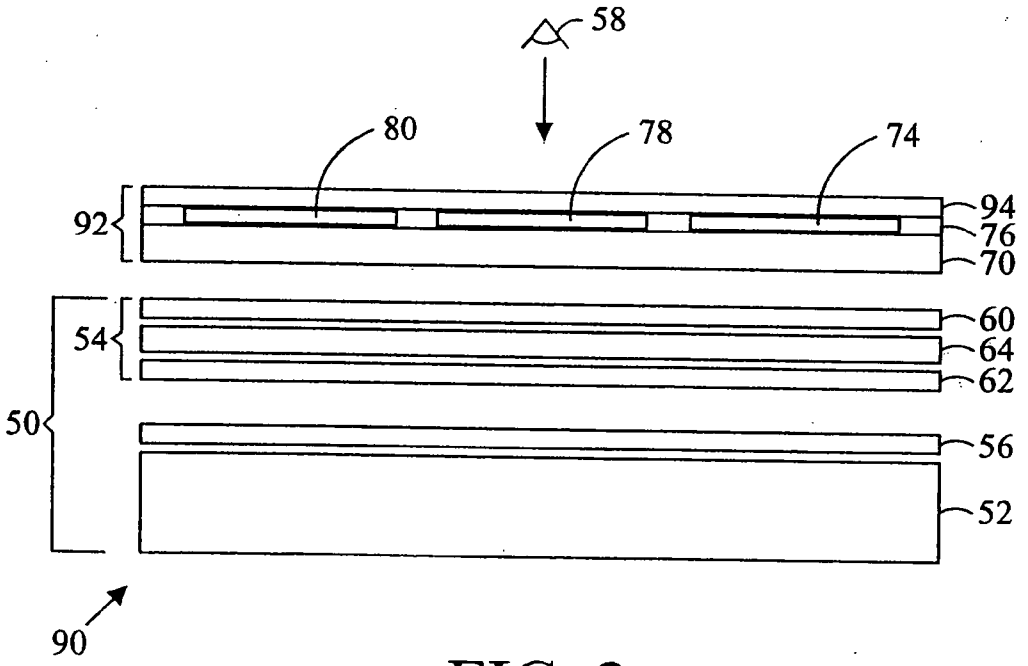
58
80
78
74
92
94
76
70
54
60
64
62
50
56
52
90

FIG. 2

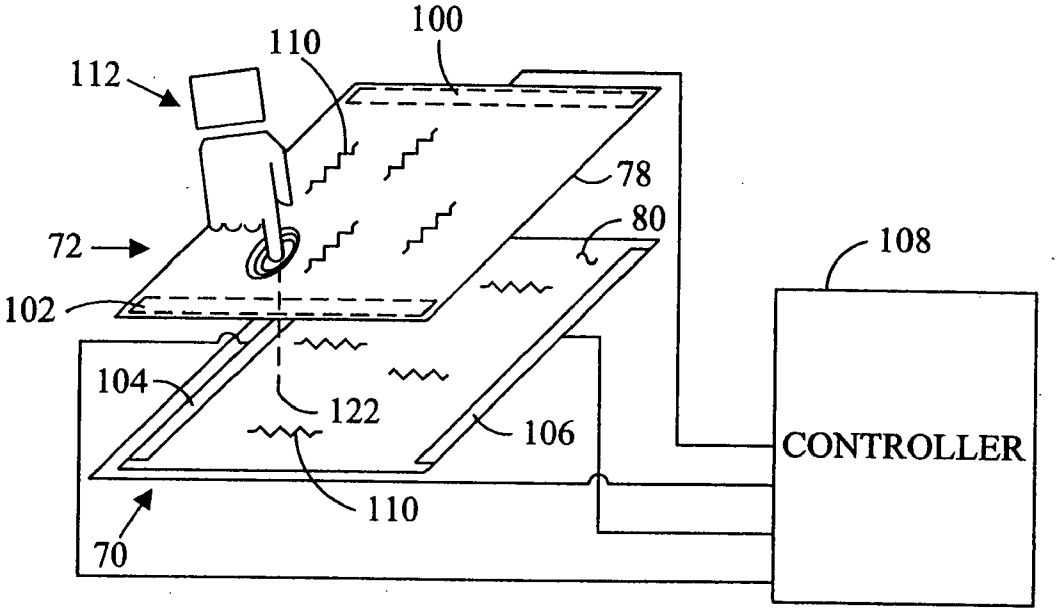
100
110
112
78
80
72
108
102
104
122
106
CONTROLLER
110
70

FIG. 3

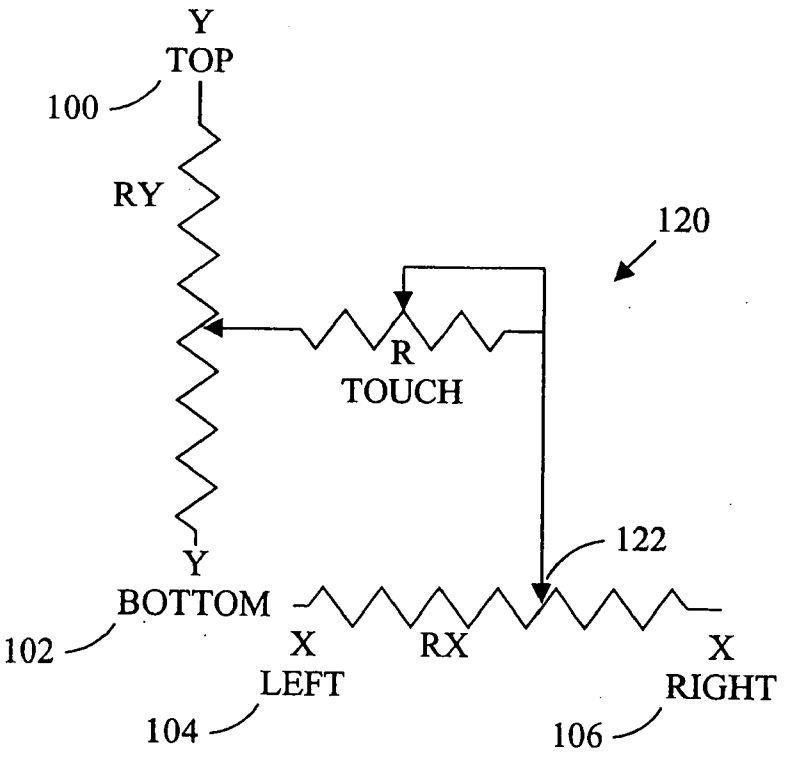
Y
TOP
100
RY
120
R
TOUCH
122
Y
BOTTOM
102
X
LEFT
104
RX
X
RIGHT
106

FIG. 4

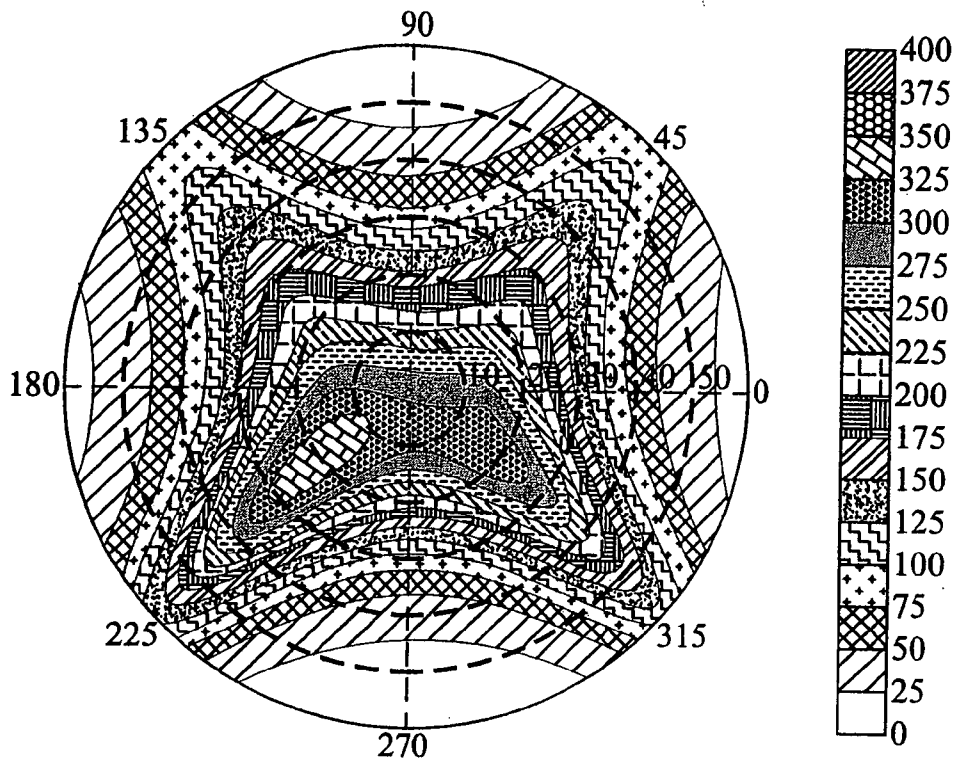
90
135
45
180
0
225
315
270
400
375
350
325
300
275
250
225
200
175
150
125
100
75
50
25
0

FIG. 5

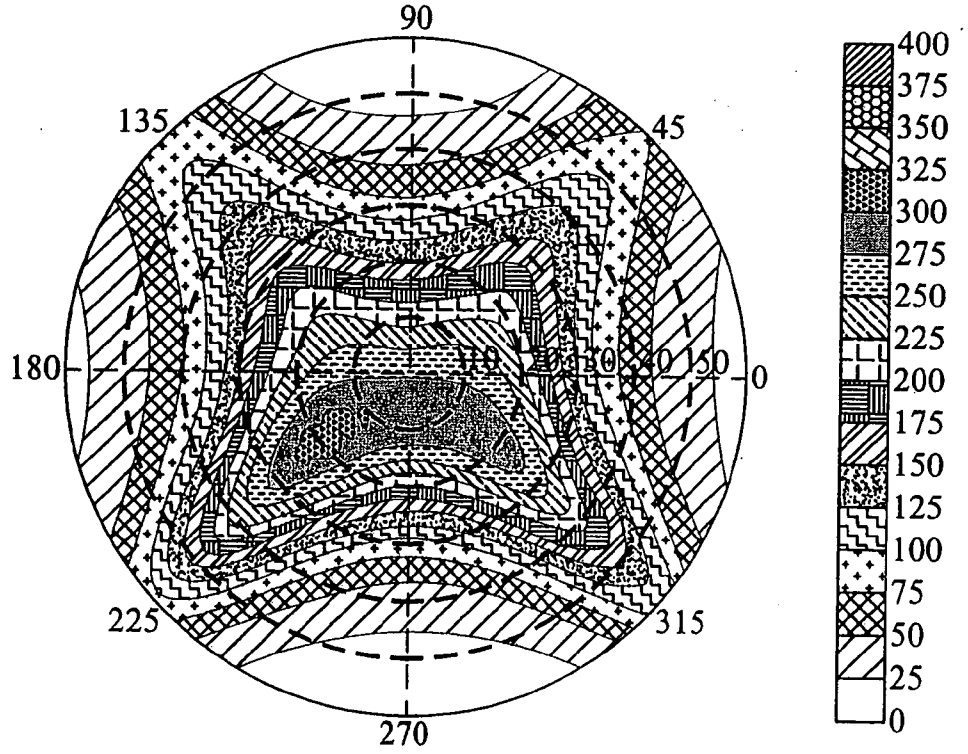
90
135
45
180
0
225
315
270
400
375
350
325
300
275
250
225
200
175
150
125
100
75
50
25
0

FIG. 6

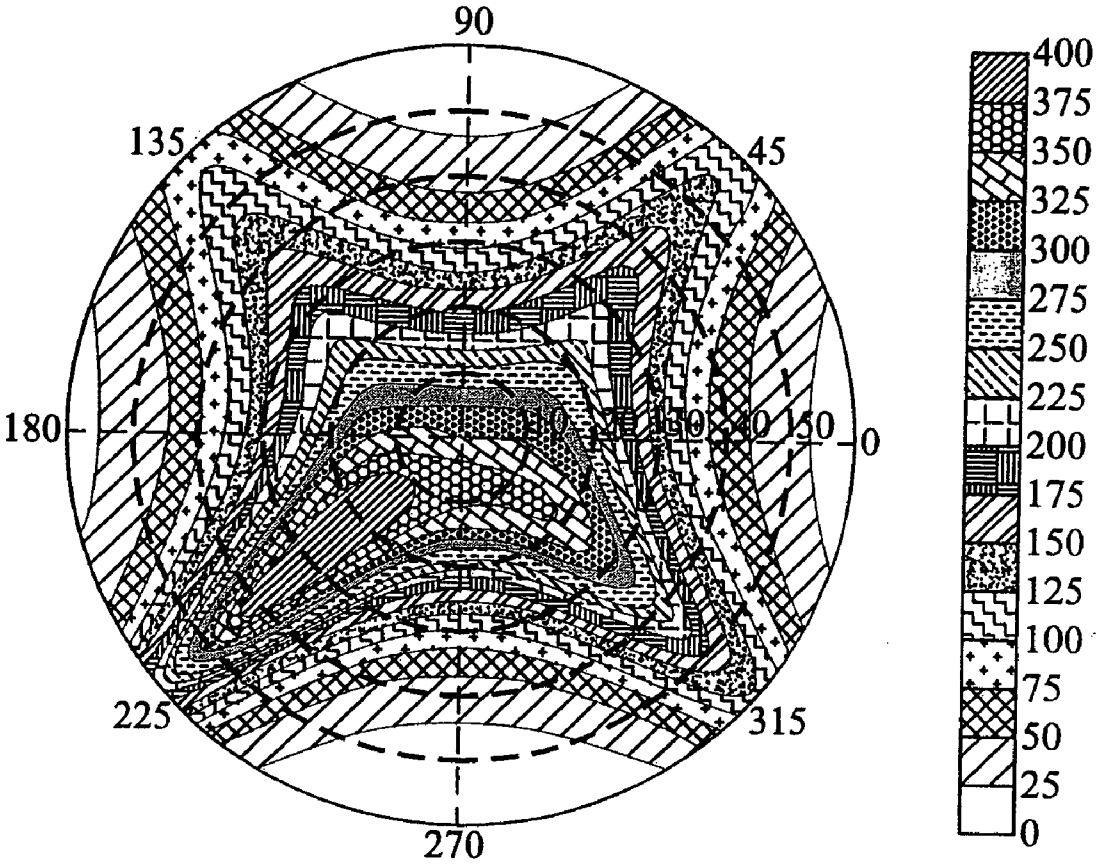
90
135
45
180
0
225
315
270
400
375
350
325
300
275
250
225
200
175
150
125
100
75
50
25
0

FIG. 7

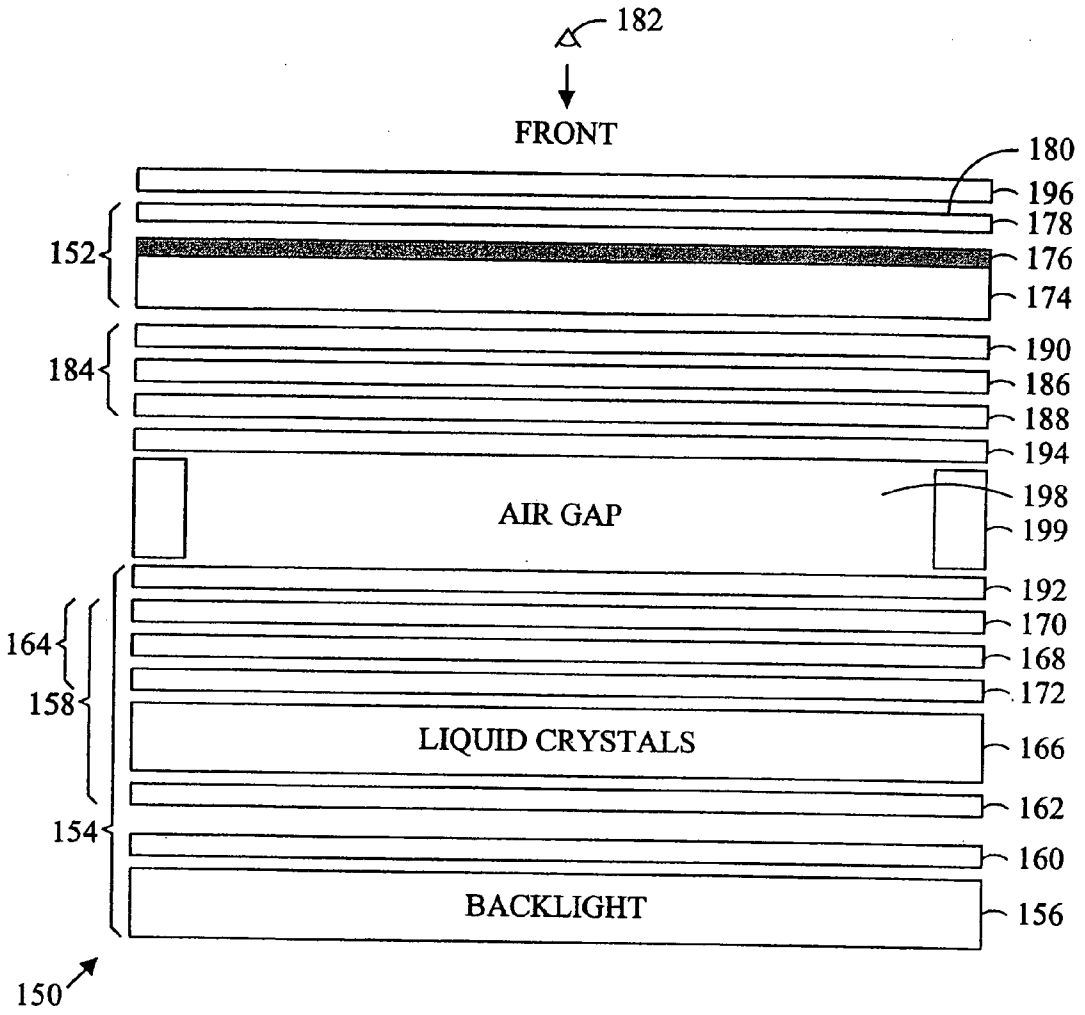
182
FRONT
180
196
178
152
176
174
184
190
186
188
194
AIR GAP
198
199
192
164
170
168
158
172
LIQUID CRYSTALS
166
162
154
160
BACKLIGHT
156
150

FIG. 8

TOUCH SCREEN CONSTRUCTION						
Screen No.	Light Valve Polarizer (Material)	Antireflection Panel 1 -Coated Panel Material-	Antireflection Panel 2 -Coated Panel Material-	Touch Panel Polarizer	Anti-Glare-Touch Panel Front	Antireflection Panel 3 -Coated Panel Material-
1	Birefringent	NO	NO	NO	NO	NO
2	Birefringent	NO	NO	NO	YES	NO
3	Birefringent	Birefringent	NO	NO	NO	NO
4	Birefringent	Birefringent	NO	NO	YES	NO
5	Birefringent	Birefringent	Birefringent	NO	NO	NO
6	Birefringent	Birefringent	Birefringent	NO	YES	NO
7	Birefringent	Birefringent	Birefringent	NO	NO	Birefringent
8	Birefringent	Birefringent	Birefringent	NO	NO	Anti-Glare Birefringent
9	Birefringent	NO	NO	YES	NO	Anti-Glare Birefringent
10	Non-birefringent	NO	NO	NO	NO	NO
11	Non-birefringent	NO	NO	NO	YES	NO
12	Non-birefringent	Birefringent	NO	NO	NO	NO
13	Non-birefringent	Birefringent	NO	NO	YES	NO
14	Non-birefringent	Birefringent	Birefringent	NO	NO	NO
15	Non-birefringent	Birefringent	Birefringent	NO	YES	NO
16	Non-birefringent	Birefringent	Birefringent	NO	NO	Birefringent
17	Non-birefringent	Birefringent	Birefringent	NO	NO	Anti-Glare Birefringent
18	Non-birefringent	NO	NO	YES	NO	NO
19	Non-birefringent	NO	NO	YES	YES	NO
20	Non-birefringent	Non-birefringent	NO	YES	NO	NO
21	Non-birefringent	Non-birefringent	NO	YES	YES	NO
22	Non-birefringent	Non-birefringent	Non-birefringent	YES	NO	NO
23	Non-birefringent	Non-birefringent	Non-birefringent	YES	YES	NO
24	Non-birefringent	Non-birefringent	Non-birefringent	YES	NO	Birefringent
25	Non-birefringent	Non-birefringent	Non-birefringent	YES	NO	Anti-Glare Birefringent

TABLE 1A

SPECULAR REFLECTANCE BY COMPONENT (%)							
Screen No.	Light Valve Polarizer	Antireflection Coating - Light Valve Polarizer	Antireflection Coating Touch Panel Back	Touch Panel Polarizer	Anti-Glare-Touch Panel Front	Antireflection Coating Touch Panel Front	Reflectance Total (%)
1	0.60	4.00	4.00	0	0	4.00	12.60
2	0.60	4.00	4.00	0	50	4.00	10.60
3	0.60	0.50	4.00	0	0	4.00	9.10
4	0.60	0.50	4.00	0	50	4.00	7.10
5	0.60	0.50	0.50	0	0	4.00	5.60
6	0.60	0.50	0.50	0	50	4.00	3.60
7	0.60	0.50	0.50	0	0	0.50	2.10
8	0.60	0.50	0.50	0	50	0.50	1.85
9	0.60	4.00	0.25	64	50	0.25	0.61
10	0.60	4.00	4.00	0	0	4.00	12.60
11	0.60	4.00	4.00	0	50	4.00	10.60
12	0.60	0.50	4.00	0	0	4.00	9.10
13	0.60	0.50	4.00	0	50	4.00	7.10
14	0.60	0.50	0.50	0	0	4.00	5.60
15	0.60	0.50	0.50	0	50	4.00	3.60
16	0.60	0.50	0.50	0	0	0.50	2.10
17	0.60	0.50	0.50	0	50	0.50	1.85
18	0.60	4.00	4.00	64	0	4.00	7.10
19	0.60	4.00	4.00	64	50	4.00	5.10
20	0.60	0.50	4.00	64	0	4.00	5.84
21	0.60	0.50	4.00	64	50	4.00	3.84
22	0.60	0.50	0.50	64	0	4.00	4.58
23	0.60	0.50	0.50	64	50	4.00	2.58
24	0.60	0.50	0.50	64	0	0.50	1.08
25	0.60	0.50	0.50	64	50	0.50	0.83

TABLE 1B

DIFFUSE REFLECTANCE BY COMPONENT (%)							
Screen No.	Light Valve Polarizer	Antireflection Coating - Light Valve Polarizer	Antireflection Coating Touch Panel Back	Touch Panel Polarizer	Anti-Glare-Touch Panel Front	Antireflection Coating Touch Panel Front	Reflectance Total (%)
1	0.17	0.06	0.10	0	0	0.06	0.39
2	0.17	0.06	0.10	0	50	0.06	0.42
3	0.17	0.06	0.10	0	0	0.06	0.39
4	0.17	0.06	0.10	0	50	0.06	0.42
5	0.17	0.06	0.10	0	0	0.06	0.39
6	0.17	0.06	0.10	0	50	0.06	0.42
7	0.17	0.06	0.10	0	0	0.06	0.39
8	0.17	0.06	0.10	0	50	0.06	0.42
9	0.17	0.06	0.03	64	50	0.03	0.14
10	0.17	0.06	0.10	0	0	0.06	0.39
11	0.17	0.06	0.10	0	50	0.06	0.42
12	0.17	0.06	0.10	0	0	0.06	0.39
13	0.17	0.06	0.10	0	50	0.06	0.42
14	0.17	0.06	0.10	0	0	0.06	0.39
15	0.17	0.06	0.10	0	50	0.06	0.42
16	0.17	0.06	0.10	0	0	0.06	0.39
17	0.17	0.06	0.10	0	50	0.06	0.42
18	0.17	0.06	0.10	64	0	0.06	0.18
19	0.17	0.06	0.10	64	50	0.06	0.21
20	0.17	0.06	0.10	64	0	0.06	0.18
21	0.17	0.06	0.10	64	50	0.06	0.21
22	0.17	0.06	0.10	64	0	0.06	0.18
23	0.17	0.06	0.10	64	50	0.06	0.21
24	0.17	0.06	0.10	64	0	0.06	0.18
25	0.17	0.06	0.10	64	50	0.06	0.21

TABLE 1C

Screen No.	TRANSMITTANCE (%)	TOTAL REFLECTED LIGHT (fL)	CONTRAST RATIO
1	88	283.2	1.70
2	88	245.6	1.81
3	92	213.2	1.93
4	92	175.6	2.13
5	95	143.2	2.38
6	95	105.6	2.87
7	99	73.2	3.68
8	99	70.6	3.78
9	85	23.3	8.00
10	88	283.2	1.70
11	88	245.6	1.81
12	92	213.2	1.93
13	92	175.6	2.13
14	95	143.2	2.38
15	95	105.6	2.87
16	99	73.2	3.68
17	99	70.6	3.78
18	76	156.2	2.08
19	76	118.6	2.42
20	79	131.0	2.28
21	79	93.4	2.79
22	82	105.8	2.59
23	82	68.2	3.45
24	85	35.8	5.61
25	85	33.2	5.96

TABLE 1D

REFLECTION RESISTANT TOUCH SCREENS

CROSS-REFERENCE TO RELATED APPLICATIONS

[0001] This application is a division of U.S. patent application No. 10/376,155, filed Feb. 28, 2003, which application claims the benefit of U.S. Provisional App. No. 60/361,238, filed Mar. 1, 2002.

BACKGROUND OF THE INVENTION

[0002] The present invention relates to a touch screen display and, more particularly, to a reflection resistant, touch sensitive display.

[0003] A touch screen display permits a user to input information to a computer system by touching an icon or other visual element displayed on a screen or by tracing a symbol on a screen to be identified and interpreted by the computer system. Direct user interaction through a touch sensitive screen is considered to be one of the most intuitive methods of computer input. As a result, touch screens have been widely applied to personal digital equipment; to public access data processing systems, such as self-service fuel pumps, automated teller machines and automated ticketing systems; and to instrumentation and controls for medical equipment, aircraft, and vehicles.

[0004] Several types of touch screens have developed to address the needs of the wide variety of potential applications. Surface Acoustic Wave (SAW) touch screens comprise a glass panel with acoustic transceivers attached to three comers and reflecting stripes arranged along the edges. The transceivers generate inaudible sound waves that travel across the screen. When a user's finger makes contact with the screen, a portion of the wave's energy is absorbed. The touch screen controller detects the energy loss and calculates the coordinates of the contact. A Near Field Imaging (NFI) touch screen comprises a base layer and a front layer of glass separated by a transparent conductive film deposited in a patterned topology. A controller applies an excitation waveform to the conductive layer to generate a low strength electrostatic field in the front layer of glass. The field is modulated when the glass is contacted by a finger or a conductive stylus, producing a differential signal that is detected and spatially resolved by the controller to determine the location of the contact with the screen.

[0005] Capacitive touch screens comprise multiple layers of glass with a thin conductive film between a pair of glass layers. A narrow pattern of electrodes is placed between glass layers. The conductive film may be, for example, patterned indium tin oxide (ITO) or a thin wire mesh. An oscillator circuit attached to each corner of the screen induces a low voltage electric field in the coating. When the glass screen is touched, the properties of the electric field change. The touch screen's controller computes the coordinates of the point of contact with the screen by measuring the relative changes of the electric field at a plurality of electrodes.

[0006] The most popular type of touch screen is a resistive touch screen. Resistive touch screens comprise a substantially rigid substrate and a flexible cover each having a surface coated with a transparent conductive material, usually indium tin oxide (ITO). The substrate and cover are bonded together with the conductive surfaces facing each other but separated by an air gap produced by a pattern of transparent insulators deployed on one of the surfaces. When a user presses on the flexible cover, the cover is deformed and the conductive surfaces make contact. A controller measures the voltage drop in circuits resulting from contact between the conductive layers to determine the coordinates of the point at which the contact was made.

[0007] Resistive and capacitive touch sensitive systems are typically produced as a transparent, touch-sensitive panel that is placed in front of the screen or display surface of the underlying electronic display. The touch sensitive systems are commonly used in conjunction with several types of displays including cathode ray tubes (CRTs) and liquid crystal displays (LCDs). LCD-based displays are preferred for many touch screen applications because LCDs are lighter, more compact, more rugged, and use less energy than CRT displays.

[0008] Generally, an LCD comprises a light valve that controls the intensity of light passing through the panel from a source at the back of the LCD (a "backlight") to a viewer's eyes at the front of the panel. The light valve generally comprises a pair of polarizers separated by layer of liquid crystals filling a cell gap between the polarizers. The optical axes of the two polarizers are arranged relative to each other so that light from the backlight is either blocked or transmitted through the polarizers. The liquid crystals are birefringent and translucent and the relative orientation of the crystals of the layer can be controlled to switch the light valve from a transmitting state where light is transmitted through the two polarizers to a non-transmitting state where light transmission is blocked. For example, the walls of the cell gap may be buffed to create microscopic grooves that orient adjacent molecules of liquid crystal with optical axes of the two polarizers. Liquid crystals exhibit a dipole that attracts neighboring crystals and causing the crystals of columns spanning the liquid crystal layer to align with each other. If the crystals at the limits of the layer are arranged at an angle to each other to align with the optical axis of the polarizers, the crystals of the intervening column will be progressively twisted into alignment by the dipole. The plane of vibration of light transmitted from the first polarizer passing through a column of crystals is also "twisted" so that it is aligned with the optical axis of the second polarizer and visible to the viewer (in a "normally white" LCD). To turn a pixel off and create an image, a voltage is applied to an electrode of an array of electrodes on the walls of the cell gap with reference to a common electrode causing adjacent liquid crystals to be twisted out of alignment with the optical axis of the adjacent polarizer attenuating the light transmitted from the backlight to the viewer. (Conversely, the polarizers of the light valve of a "normally black" LCD are arranged so that the pixel is "off" or "black" when the controlling electrode is not energized and switched "on" or "white" when the electrode is energized.)

[0009] While LCDs are the displays of choice for many touch screen applications, the combination of an LCD display device and a touch panel can be problematic. The principal problem is that touch panels are reflective and, when exposed to intense ambient lighting, the luminance of the reflection often overpowers the image being displayed by the LCD.

[0010] The reflectivity of a resistive touch panel is principally the result of coating the facing surfaces of the cover and the substrate with the transparent conductive coating of ITO. ITO has a relatively high index of refraction (typically, n=1.83 for light in the green wavelengths) while the air in the gap between the resistive surfaces has an index of refraction of 1.0. The percentage of perpendicularly incident light reflected from a discontinuity in the index of refraction is, approximately:

$$R(\%) = \left(\frac{n_2 - n_1}{n_2 + n_1}\right)^2$$

[0011] where: n_2=index of refraction for the optically denser material

[0012] n_1=index of refraction for the optically less dense material

[0013] R=percentage of incident light reflected

[0014] (It is noted that the aforementioned equation is only accurate for perpendicular viewing directions.) The result of two transitions of the air-to-ITO boundaries by ambient light from the front of the panel is reflection of roughly 17% of the ambient light incident on the panel. This reflection is sufficient to obscure the displayed image under modest to high intensity ambient lighting conditions.

[0015] Sawai et al., U.S. Pat. No. 6,020,945, disclose an optical filter for a resistive touch panel that is intended to prevent reflection of external light and obscuration of the displayed image. The optical filter comprises, generally, a filter polarizer in front of the screen of the display. The filter polarizer may be a circular polarizer comprising a combination of a linear polarizer and a quarter wave phase difference plate. Much of the ambient light striking the front of the panel is absorbed by the filter polarizer. In addition, light passing through the filter polarizer and reflecting from the ITO layers passes twice through a quarter wave phase difference plate. The phase difference plate alters the polarization of the reflected light so that the reflected light is blocked by the filter polarizer.

[0016] On the other hand, the linear polarized light of the image from the LCD light valve is circular polarized by a second phase difference plate before passing through the touch panel. The optical axis of a circular polarizing, filter polarizer is aligned so that the circular polarized light from the LCD is transmitted through the filter polarizer to the viewer. While a touch panel filter reduces reflection of ambient light, the combination of the filter polarizer and phase difference plates substantially attenuates the light from the light valve reducing the brightness of the image, and the combination of the touch panel and filter substantially distort the image.

[0017] What is desired, therefore, is a touch screen providing substantially reduced reflection of ambient light and an undistorted image.

[0018] The foregoing and other objectives, features, and advantages of the invention will be more readily understood upon consideration of the following detailed description of the invention, taken in conjunction with the accompanying drawings.

BRIEF DESCRIPTION OF THE SEVERAL VIEWS OF THE DRAWINGS

[0019] **FIG. 1** is an exploded cross-section of a touch screen comprising a resistive touch panel and an associated liquid crystal display (LCD).

[0020] **FIG. 2** is an exploded cross-section of a touch screen comprising a resistive touch panel of alternative construction and an associated liquid crystal display (LCD).

[0021] **FIG. 3** is a schematic representation of the arrangement of the conductive elements of an exemplary four-wire resistive touch panel.

[0022] **FIG. 4** is an equivalent circuit of an exemplary four-wire resistive touch panel.

[0023] **FIG. 5** is an isocontrast plot of the output of an exemplary LCD.

[0024] **FIG. 6** is an isocontrast plot of the output of a touch screen comprising the exemplary LCD of **FIG. 5** and a resistive touch panel.

[0025] **FIG. 7** is an isocontrast plot of the output of a touch screen comprising the exemplary LCD of **FIG. 5** and a resistive touch panel including a front polarizer.

[0026] **FIG. 8** is an exploded cross-section of a reflection resistant touch screen comprising a capacitive touch panel and an associated LCD.

[0027] TABLE 1A is a table of alternate reflection resistant touch screen constructions indicating arrangements and characteristics of touch screen elements.

[0028] TABLE 1B is a table of the specular reflection contributions from the components of the touch screens of alternate construction described in TABLE 1A.

[0029] TABLE 1C is a table of the diffuse reflection contributions from the components of the touch screens of alternate construction described in TABLE 1A.

[0030] TABLE 1D is a table illustrating the optical performance of the touch screens of alternate construction described in TABLE 1A.

DETAILED DESCRIPTION OF PREFERRED EMBODIMENT

[0031] Referring to **FIGS. 1 and 2** (like elements are identified by common item numbers), a touch screen generally comprises a transparent touch sensitive panel **68** (indicated by a bracket) which is installed proximate to the display screen of a computer operated display, such as a liquid crystal display (LCD) **50** or a cathode ray tube (CRT) monitor. A user can see the displayed image through the touch panel and interact with the computer system by touching the front surface of the touch panel at a location designated by the computer with the display of an icon or other visible indicator. Typically, touch panels and displays are produced as separate units and are often supplied by different manufacturers.

[0032] A liquid crystal display (LCD) **50** (indicated by a bracket) comprises generally, a backlight **52** and a light valve **54** (indicated by a bracket). Since liquid crystals do not emit light, most LCD panels are backlit with flourescent tubes or arrays of light-emitting diodes (LEDs) that are built

into the sides or back of the panel. To disperse the light and obtain a more uniform intensity over the surface of the display, light from the backlight **52** typically passes through a diffuser **56** before impinging on the light valve **54**.

[**0033**] The transmittance of light from the backlight **52** to the eye of a viewer **58**, observing an image displayed on the front of the panel, is controlled by the light valve **54**. The light valve **54** comprises a pair of polarizers **60** and **62** separated by a layer of liquid crystals **64** contained in a cell gap between the polarizers. Light from the backlight **52** impinging on the first polarizer **62** comprises electromagnetic waves vibrating in a plurality of planes. Only that portion of the light vibrating in the plane of the optical axis of a polarizer can pass through the polarizer. In an LCD light valve, the optical axes of the first **62** and second **60** polarizers are typically arranged at an angle so that light passing through the first polarizer would normally be blocked from passing through the second polarizer in the series. However, the orientation of the translucent crystals in the layer of liquid crystals 64 can be locally controlled to either "twist" the vibratory plane of the light into alignment with the optical axes of the polarizers, permitting light to pass through the light valve creating a bright picture element or pixel, or out of alignment with the optical axis of one of the polarizers, attenuating the light and creating a darker area of the screen or pixel.

[**0034**] The surfaces of a first glass plate **63** and a second glass plate **51** form the walls of the cell gap and are buffed to produce microscopic grooves to physically align the molecules of liquid crystal **64** immediately adjacent to the walls. Molecular forces cause adjacent liquid crystal molecules to attempt to align with their neighbors with the result that the orientation of the molecules in the column of molecules spanning the cell gap twist over the length of the column. Likewise, the plane of vibration of light transiting the column of molecules will be "twisted" from the optical axis of the first polarizer **62** to a plane determined by the orientation of the liquid crystals at the opposite wall of the cell gap. If the wall of the cell gap is buffed to align adjacent crystals with the optical axis of the second polarizer, light from the backlight **52** can pass through the series of polarizers **60** and **62** to produce a lighted area of the display when viewed from the front of the panel (a "normally white" LCD).

[**0035**] To darken a pixel and create an image, a voltage, typically controlled by a thin film transistor, is applied to an electrode in an array of transparent electrodes deposited on the walls of the cell gap. The liquid crystal molecules adjacent to the electrode are attracted by the field produced by the voltage and rotate to align with the field. As the molecules of liquid crystal are rotated by the electric field, the column of crystals is "untwisted," and the optical axes of the crystals adjacent to the cell wall are rotated progressively out of alignment with the optical axis of the corresponding polarizer progressively reducing the local transmittance of the light valve **54** and attenuating the luminance of the corresponding pixel. Conversely, the polarizers and buffing of the light valve can be arranged to produce a "normally black" LCD having pixels that are dark (light is blocked) when the electrodes are not energized and light when the electrodes are energized. Color LCD displays are created by varying the intensity of transmitted light for each of a plurality of primary color (typically, red, green, and blue) sub-pixels that make up a displayed pixel.

[**0036**] The aforementioned example was described with respect to a twisted nematic device. However, this description is only an example and other devices may likewise be used, including, but not limited to, multi-domain vertical alignment (MVA), patterened vertical alignment (PVA), in-plane switching (IPS), and super-twisted nematic (STN) type LCDs.

[**0037**] Several touch panel technologies are available. Resistive touch panels are typically the least expensive and, therefore, the most common. Referring to **FIG. 1**, a resistive touch panel **68** (indicated by a bracket) comprises generally a substantially rigid, transparent substrate **70** and a flexible cover **72** that are bonded together but separated by an air gap **74** that is maintained by a plurality of transparent insulators **76** that are deployed between the substrate and the cover. The proximate surfaces **78** and **80** of the substrate **70** and flexible cover **72**, respectively, are coated with a transparent conductive material, typically, indium tin oxide (ITO). Referring to **FIG. 3**, the conductive ITO layers **78** and **80** deposited on the cover **72** and the substrate **70**, respectively, comprise resistive conductors between a pair of bus bars at the top **100** and bottom **102** edges of the cover substrate and the right **106** and left **104** edges of the other panel element (e.g., bottom). When a user presses **112** on the flexible cover **72**, the cover deforms and the conductive surface layers **78** and **80** make selective contact **122** completing an electrical circuit, as illustrated in **FIG. 4**.

[**0038**] A touch screen controller **108** determines the coordinates of the point of contact by measuring voltage between points in the circuits that are completed through the conductive surface layers. Resistive touch panels are generally classified as four-wire, five-wire, and eight-wire touch panels according to the number of conductors in the resistive circuit. For example, **FIG. 4** illustrates an equivalent circuit **120** of a four-wire resistive touch panel. The controller **108** compares the voltage between either the top bus bar **100** or the bottom bus bar **102** of the first layer and one of the left **104** and right **106** bus bars of the second conductive layer with a reference voltage (top bus bar **100** to bottom bus bar **102**) to determine the x-coordinate of the contact point **122**. The controller **108** then switches the procedure and determines the y-coordinate of the screen touch by comparing the reference voltage to the voltage between either the right **104** or left **106** bus bar of the second layer and either the top **100** or bottom **102** bus bar of the first layer.

[**0039**] LCD-based touch screens are highly desirable for many applications because an LCD is lighter, more rugged, more energy efficient, and more compact than a CRT. However, a resistive touch panel **68** is very reflective and in modest to high intensity ambient lighting the luminance of the reflection from the touch panel may be sufficient to obscure the image displayed by an LCD.

[**0040**] The readability of an LCD is a function of the luminance (brightness) and contrast of the LCD display and the luminance of the reflected ambient light. While the brightness of the LCD can be increased by increasing the intensity of the backlight, the contrast between light and dark areas of the screen is limited by the ability of the light valve to extinguish light from the backlight to produce

darkened pixels. The contrast of the screen is typically specified by the ratio of the contrast of light and dark pixels:

$$CR = \frac{L_W}{L_B}$$

[0041] where: CR=contrast ratio

[0042] L_W=luminance of white state (lighted pixel)

[0043] L_B=luminance of black state (darkened pixel)

[0044] The contrast ratio is typically specified for a display viewed in a darkened room because of the effect of reflected ambient light on the contrast ratio at a defined viewing angle. For example, an LCD with a white state luminance of 200 nits and a black state luminance of 0.5 nits has a contrast ratio of 400 when viewed in a darkened room. On the other hand, if the LCD is viewed in a well-lit room that produces a glare of 20 nits at the front surface, the white state luminance will be 220 nits, the black state luminance will be 20.5 nits, and the contrast ratio will be 10.7 (220/20.5) substantially less than the contrast ratio for the display in the darkened room. Since the extinction ratio of the light valve and, therefore, the contrast ratio of the LCD in a darkened room are essentially fixed, increasing the brightness of the backlight to overcome the effects of ambient light reflections produces limited improvements in the readability of the display. Reducing the reflection of ambient light from a touch panel without significantly reducing the brightness or the contrast ratio of the displayed image can significantly improve the readability of LCD displays used in environments with higher intensity ambient lighting.

[0045] Ambient light impinging on the front of a touch screen passes through the transparent layers of the touch panel and the LCD. Light is reflected when it crosses the boundary between two materials that have differing indices of refraction. For example, the high reflectivity of the resistive touch panel is principally the result of the interaction of ambient light with the resistive coating on the proximate surfaces **78** and **80** of the substrate **70** and cover **72** of the touch panel. Indium tin oxide (ITO) is commonly used to create the transparent conductive surfaces on the substrate and cover. ITO has a high index of refraction (typically, n=1.83 for light in the green wavelengths) while the air in the gap between the resistive surfaces has an index of refraction of 1.0. As a result of transiting the air-ITO interface, a substantial portion of the ambient light impinging on the front of the panel is reflected back to the viewer **58**.

[0046] A polarizer **82** arranged in front of the touch screen can significantly reduce the reflection of ambient light. The ambient light randomly vibrates in all planes, but only that portion of the light vibrating in the plane of a polarizer can pass through the polarizer. As a result, a polarizer in front of the touch screen substantially reduces the light reaching the ITO interfaces for reflection back to the viewer **58**. If the optical axis of the polarizer **82** on the front of the screen is aligned with the optical axis of the second polarizer **60** of the light valve **54** transmission of the image from the light valve is maximized. However, adding a polarizer **82** to the front of the touch screen distorts the image. The present inventor concluded that the image distortion is primarily the result of the interaction of the polarized light comprising the image with birefringent materials interposed between the light valve and the polarizer **82**. For example, the flexible cover of resistive touch panels is typically manufactured from polyester (PET) which is birefringent as a result of its molecular structure. In addition, the birefringence of a material is altered by the effects of local strain on the molecular structure. When the flexible cover of a resistive touch panel is deformed by contact, stress causes the birefringence of the cover to vary spatially. As a result, the polarizer **82** interferes to varying degrees with the polarized light comprising the image and the image is distorted. The present inventor concluded that reflection of ambient light could be reduced by arranging a polarizer in front of the touch panel and that the image quality could be preserved by avoiding introducing birefringence in the optical path between the light valve **54** and the viewer **58**.

[0047] In the LCD touch screen **20**, the front surface of the touch panel **68** comprises a polarizer **82**. The flexible cover **72** of the touch panel **68** comprises a substantially non-birefringent, flexible plastic material, such as polycarbonate (PC), triacetate cellulose (TAC), or polyvinyl alcohol (PVA). Since the cover **72** is substantially non-birefringent, the polarization of light transiting the cover is unaffected by the cover and distortion of the image as a result of interference between the optical axes of the polarizer **82** and stressed areas of the deformed cover **72** is avoided. The birefringence has a retardation, preferably, less than 25; more preferably, less than 15; and yet more preferably, less than 5.

[0048] Referring to **FIG. 2**, the touch panel **92** of an alternative touch screen **90** incorporates a polarizer **94** (indicated by a bracket) comprising a polarizing element **95** supported by and bonded to a first surface of a flexible, non-glass, support layer **97**. The support layer **97** comprises a non-birefringent material such as PVA that is bonded to the birefringent polarizing element **95** to form a polarizer **94** that can be substituted for the separate polarizer **82** and cover **72** utilized in touch panel **20**. The polarizer **94** is attached to the front of the touch panel **92**. The second surface of the support layer **97** proximate to the substrate **70** is coated with ITO to provide the electrical conductivity required for a resistive touch panel. The front surfaces of the polarizers **82** and **92** are typically coated with a material that reduces reflection and repels oil to minimize visual effects of finger touches.

[0049] Comparison of isocontrast plots for the output of an LCD display without a touch panel **120**, see **FIG. 5**; the LCD equipped a resistive touch panel **122**, see **FIG. 6**; and the LCD equipped with a resistive touch panel including a non-birefringent front cover **124**, see **FIG. 7**, illustrate the improvement in contrast ratio (without image distortion) that can be achieved with the innovative LCD touch screen.

[0050] While the touch panels **68** and **92**, including non-birefringent covers and front polarizers, substantially reduce the reflection of ambient light, extending the usefulness of LCD touch screens to environments with higher ambient light intensity, the touch screens have limited usefulness in outdoor applications. The plastic materials typically used in the manufacture of polarizers for LCDs and touch panels deteriorate when exposed to ultraviolet light. **FIG. 8** illustrates a touch screen adapted for outdoor use comprising a capacitive touch panel **152** (indicated by a bracket), an LCD

154 (indicated by a bracket), and a plurality of additional components that can be arranged to provide exemplary touch screens **150** of alternate construction that are suitable for exposure to ultraviolet light and reduce reflection of ambient light. Capacitive touch panels are often used in outdoor applications because the touch panel can be sealed to prevent the entry of moisture or other contaminants. In addition, capacitive touch panels are typically constructed from glass panels that provide durability, resistance to scratches, and ultraviolet light (UV) protection for components underlying the glass panels of the touch panel.

[**0051**] The LCD **154** comprises generally, a backlight **156** and a light valve **158** (indicated by a bracket). Light from the backlight **156** is dispersed by a diffuser **160** before impinging on the light valve **158**. The light valve **158** comprises a first polarizer **162** and a second polarizer **164** (indicated by a bracket) that are separated by a layer of liquid crystals **166** contained in a cell gap between the polarizers. The orientation of molecules of liquid crystals **166** and the optical axis of the first **162** and second polarizers **164** control the transmission of light from the backlight **156** through the light valve **158**.

[**0052**] As illustrated in detail for the second polarizer **164** of the light valve **158**, polarizers used in LCD construction typically comprise a polymer-based polarizing layer **168** that is sandwiched between a pair of carrier layers **170** and **172** that provide strength and durability to the polarizer. The carrier layer **170** typically comprises a birefringent material such as polyester and the carrier layer **172** is substantially non-birefringent. In alternative constructions of the reflection resistant touch screen **150**, the carrier layers **170** and **172** of the polarizers may comprise a substantially non-birefringent material, such as polycarbonate or triacetate cellulose (i.e., insubstantial x,y birefringence and some birefringence in the z-direction).

[**0053**] The capacitive touch panel **152** comprises a glass substrate **174** with a conductive coating **176** applied to the front surface of the substrate. The conductive patterned surface coating or wire mesh **176** is covered by a protective coating layer **178**. When the user contacts the protective coating layer **178**, a change in the local capacitance occurs which may be measured by a change in the current drawn and/or the frequency response from the conductive layer. A controller (not illustrated) compares the current flow from a plurality of electrodes at the periphery of the conductive layer to determine the location of the user's contact with the panel.

[**0054**] The protective coating layer **178** for the touch panel **152** may have a glare diffusing front surface **180**. Glare is the result of reflection of light at an exposed surface. The reflection from an untreated polished surface is generally specular as in a reflection from a mirror. Typically, antiglare treatments roughen or coat the surface to create a texture that scatters the incident light and cause the reflection to be distributed over a large cone or diffused. Antiglare or glare diffusing surfaces also provide some protection from finger prints and similar surface contamination that may cause readability problems. Glare diffusing surfaces reduce the intensity of the reflected light that reaches the viewer's eyes and is particularly effective in indoor applications where ambient light typically originates from several sources. On the other hand, under direct sunlight it may be relatively easy for a viewer **182** to avoid the intense specular reflection from a single source while the somewhat less intense, but diffuse reflection from a glare diffusing surface may be sufficient to cause readability problems.

[**0055**] To reduce the reflection of ambient light that transits the touch screen **152**, the panel may also incorporate a polarizer **184** adjacent to the back surface of the touch panel **152**. The polarizer **184** is protected from exposure to ultraviolet light by the glass of the touch panel substrate **174**. The polarizer **184** comprises a polarizing layer **186** supported by a pair of carrier layers **188** and **190**. The carrier layer **188** of the polarizer **184** may comprise either a birefringent material, such as polyester, or a substantially non-birefringent material, such as polycarbonate or triacetate cellulose, while the carrier layer **188** comprises a substantially non-birefringent material. Ambient light transiting the touch panel **152** comprises light vibrating in a plurality of planes. Since the polarizer **184** will only pass light vibrating in the plane of its optical axis and absorb substantially all of the light vibrating in other planes, a substantial portion of the ambient light transiting the touch panel is absorbed at the polarizer **184**. The optical axis of the polarizer **184** is aligned with the optical axis of the second polarizer **164** of the light valve **158** so that the polarized light comprising the image is transmitted through the polarizer **184** to the viewer **182** at the front of the touch screen display **150** with minimum attenuation.

[**0056**] To further reduce reflection of ambient light impinging on the front of the touch screen **152**, the touch screen may include one or more anti-reflection panels **192**, **194**, and **196**. A first anti-reflection panel **192** may be interposed between the touch panel **152** and the second polarizer **164** of the light valve. Typically, this anti-reflection panel **192** is adhered to the front surface of the second polarizer **164**. A second anti-reflection panel **194** may also be interposed between the light valve **158** and the touch panel **152**. The second anti-reflection panel **194** may be proximate to the back side of the glass substrate **174** or the touch panel polarizer **184**, if the touch screen is so constructed. The first **192** and second **194** anti-reflection panels may comprise a film of substantially non-birefringent material, such as polycarbonate or triacetate cellulose, coated with an anti-reflection coating and in the case that a polarizer **184** is omitted may also be birefringent material. The anti-reflection coating shifts the relative phase of the light reflected by the upper and lower boundaries of the coating film by 90° so that the reflecting beams destructively interfere and are extinguished. A third anti-reflection panel **196** can be arrayed in front of the touch panel **152** in certain alternate touch screen constructions. The third anti-reflection panel is typically an anti-reflection coating applied to a birefringent film and may have a glare diffusing front surface in some alternate constructions. It is noted that the construction is preferably free from a front polarizer exposed to the air in the front and preferably free from a polarizer between the viewer and the touch panel elements. In this manner the display is more resistant to environmental conditions, such as ultra-violet light. Alternatively, a polarizer may be included in some locations.

[**0057**] TABLE 1A tabulates the characteristics of several components that may be used in constructing several alternate reflection resistant touch screens. TABLES 1B-1D tabulate the effects on the specular and diffuse reflection, the luminance, the reflected light, and the contrast ratio of the touch screen resulting from incorporating components of alternative specification in the touch screen **150**. For example, touch screen construction number **1** includes a capacitive touch panel and a second polarizer **164** having a birefringent front carrier layer **170**. With no additional reflection reducing components, approximately 284 foot lamberts (fL) of light are reflected comprising specular reflection of 12.6% of the incident ambient light 2000 foot

Lambert (fL) and diffuse reflection of approximately 0.4% of the incident 8000 foot candle (fC) ambient light. The touch screen transmits approximately 88% of the image light to the front of the touch screen and has a contrast ratio of 1.70.

[0058] To improve the performance of the touch screen in environments with higher levels of ambient lighting a glare diffusing surface treatment is applied to the front surface of the touch panel for alternative touch screen number **2**. The glare diffusing surface of alternative touch screen construction number **2** provides a touch screen with an improved contrast ratio resulting from a substantial reduction of specular reflection that is partially offset by a slight increase in diffuse reflection.

[0059] Alternate touch screen constructions **3** and **4** include an anti-reflection panel **192**, comprising an anti-reflection coated birefringent film, interposed between the light valve **158** and the touch panel **152**. The anti-reflection panel **192** reduces the specular reflection of the touch screens relative to screen constructions **1** and **2**. An antiglare surface treatment on the front surface of the touch panel of screen number **4**, provides additional reduction of the specular reflection with a slight increase in diffuse reflection. Touch screen alternatives **3** and **4** reduce the total reflected light and increase the contrast ratio of the touch screen relative to touch screens **1** and **2**.

[0060] Alternate touch screen constructions **5** and **6** incorporate a second anti-reflection panel **194** interposed between the light valve **158** and the touch panel **152**. Typically, the first anti-reflection panel **192** is associated with the light valve and the second anti-reflection panel **194** is associated with the touch panel **152**. The touch screens **5** and **6** further reduce specular reflection relative to touch screens **3** and **4**, respectively, providing improved contrast ratios. An antiglare surface on the front of the touch panel is utilized for touch screen number **6** and further reduces specular reflection (at the cost of increased diffuse reflection) for a higher contrast ratio than the construction of screen number **5**.

[0061] Alternate screen construction number **7** incorporates a third anti-reflection panel in front of the front surface of the touch panel. The addition of the third anti-reflection panel substantially reduces the total light reflected by the screen principally by reducing specular reflection. The contrast ratio is improved relative to screen number **5** and can be further improved by the addition of a glare diffusing surface treatment for the front surface of the third anti-reflection panel as indicated by alternate screen construction number **8**.

[0062] Alternate touch screen construction number **9** includes a polarizer interposed between the light valve **158** and the touch panel **152** and an anti-reflection panel **196** with antiglare surface treatment in front of the touch panel. The combination of components comprising alternate touch screen construction number **9**, provides a fairly high contrast ratio but substantially lower transmittance of the displayed image than provided by alternate touch screen constructions **1-8**.

[0063] Alternate touch screen constructions **10-25** include a light valve having second polarizer **164** comprising a carrier layer **170** of a substantially non-birefringent material, such as polycarbonate or triacetate cellulose. With no additional reflection reducing components, alternate touch screen construction number **10** provides specular and diffuse reflection and contrast ratio equivalent to screen number **1**. Likewise, alternate touch screen construction number **11** which includes an antiglare treatment for the front surface of the touch panel, provides reflection performance and a contrast ratio equivalent to that of touch screen construction number **2**.

[0064] A first anti-reflection panel **192** comprising a birefringent film coated with an anti-reflection coating is interposed between the light valve **164** and touch panel **152** of touch screen number **10** to produce alternative touch screen construction number **12**. The effect of the anti-reflection panel **192** is a reduction in the specular reflection of the touch screen and an improvement in the contrast ratio of the touch screen. A further improvement in the contrast ratio is obtained by applying a glare diffusing surface treatment to the front surface of the touch screen as exemplified by touch screen number **13**.

[0065] In touch screen numbers **14** and **15** a second anti-reflection panel **194** comprising an anti-reflection coated birefringent film is interposed between the first anti-reflection panel **192** and the capacitive touch panel **152**. Typically, the touch panel **152** and the LCD **154** are produced separately and installed so that an air gap **198** is provided between the two components. The air gap **198** may be sealed **199** to prevent the entry of contaminants or the flow of air through the gap may be used to cool the LCD, particularly in outdoor environments subject to heating by sunlight. The first **192** and second **194** anti-reflection panels are applied to the LCD **154** and touch panel **152** respectively on opposing sides of the air gap **199**. As illustrated, the specular reflection is reduced and the contrast ratio is increased (relative to screen number **12**) by the addition of the second anti-reflection panel to touch screen number **14**. Also, as illustrated, an antiglare treatment on the front surface of the touch panel (touch screen number **15**) further reduces the specular reflection (at the expense of an increase in diffuse reflection) and improves the contrast ratio over that of touch screen number **14**.

[0066] A single anti-reflection panel **194** is interposed between the light valve **158** and the touch panel **152** in alternate constructions **16** and **17**. However, an anti-reflection panel **196** comprising an anti-reflection coated birefringent polyester film is installed in front of the touch panel **152**. Specular reflection is substantially reduced and contrast ratio is increased relative to screens **10-15**. A slightly higher contrast ratio results from an antiglare treatment of the surface of the first anti-reflection panel **196** as evidenced by alternate touch screen construction number **17**.

[0067] A polarizer **184** is included on the back side of the touch panel **152** for alternate touch screen constructions **18-25**. Alternative touch screen construction **18** comprises the touch screen construction number **11** with the addition of the polarizer **184** on the back of the touch panel. As illustrated, the polarizer **184** reduces diffuse reflection and substantially reduces the specular reflection, relative to touch screen number **11**, by absorbing light that is not vibrating in the plane of the optical axis of the polarizer. The contrast ratio is improved relative to the touch screen construction **11** but even though the optical axes of the second light valve polarizer **164** and the polarizer **184** are aligned, some of the light comprising the image is also absorbed reducing the transmittance of the image. Alternative touch screen construction number **19** adds an antiglare surface treatment to the front surface of the touch panel **152** of touch screen number **18**. The result is reduced specular

reflection and increased diffuse reflection with a slight improvement in contrast ratio over alternative touch screen construction number **18**.

[**0068**] Touch screen constructions **20** and **21** include an anti-reflection panel interposed between the light valve **158** and the touch panel **152** as well as a polarizer on the back surface of the touch panel. The result is a further reduction in the specular reflection and an increase in transmittance and contrast ratio relative to touch screens **18** and **19**, respectively. A glare diffusing surface treatment on the front surface of the touch panel **152** permits alternate touch screen number **21** to have a slightly higher contrast ratio than alternate touch screen number **20**.

[**0069**] Slightly improved, but similar results are obtained when a second anti-reflection panel **194** is interposed between the touch panel **152** and light valve **158** for touch screen construction alternatives numbers **22** and **23**. With the addition of an antiglare surface treatment for the front surface of the touch panel **152** (touch screen number **23**), the specular reflection is reduced by approximately 64% and the contrast ratio is approximately doubled compared to touch screen construction number **10**.

[**0070**] Adding a third anti-reflection panel **196** in front of the touch panel **152** produces the alternative touch screen constructions (numbers **24** and **25**) with the highest contrast ratios. With an antiglare surface treatment on the third anti-reflection panel, the contrast ratio of touch screen **25** is approximately four times that of screen number **10**. Although the transmittance of the image is substantially less than that of some of the alternate touch screen constructions, the transmittance of screen number **25** is approximately the same as that of screen number **10** while the total reflected light has been reduced by nearly 90%.

[**0071**] The reflectivity of a touch panel can present problems when applying touch screens in environments with intense ambient lighting. The addition of a polarizer in front of the front touch screen in conjunction with the elimination of birefringence between the light valve and the polarizer substantially reduces the reflection of ambient light. In applications involving direct sunlight, improvements in screen contrast ratio and a reduction in ambient light reflection can be obtained with several touch panel constructions comprising combinations of polarizers behind the touch panel, anti-reflection panels, and glare diffusing surface treatment.

[**0072**] The detailed description, above, sets forth numerous specific details to provide a thorough understanding of the present invention. However, those skilled in the art will appreciate that the present invention may be practiced without these specific details. In other instances, well known methods, procedures, components, and circuitry have not been described in detail to avoid obscuring the present invention.

[**0073**] All the references cited herein are incorporated by reference.

[**0074**] The terms and expressions which have been employed in the foregoing specification are used therein as terms of description and not of limitation, and there is no intention, in the use of such terms and expressions, of excluding equivalents of the features shown and described or portions thereof, it being recognized that the scope of the invention is defined and limited only by the claims which follow.

I/We claim:

1. A touch panel comprising:

(a) a flexible polarizing element;

(b) a flexible, substantially non-birefringent support element having a first surface bonded to said polarizing element and a conductive second surface; and

(c) a substrate having a conductive surface, said conductive surfaces of said substrate and said support element arranged such that deformation of said support element will cause selective contact of said conductive surfaces.

2. The apparatus of claim 1 wherein said flexible, substantially non-birefringent support element comprises a plastic.

3. The apparatus of claim 1 wherein said flexible, substantially non-birefringent support element comprises a polycarbonate.

4. The apparatus of claim 1 wherein said substrate is substantially non-birefringent.

5. The apparatus of claim 1 wherein said flexible, substantially non-birefringent support element comprises triacetate cellulose.

6. A touch panel comprising:

(a) a substrate having a conductive surface

(b) a flexible, substantially non-birefringent cover having a first surface and a conductive second surface, said conductive surfaces of said substrate and said cover arranged such that deformation of said flexible cover will cause selective contact of said conductive surfaces; and

(c) a polarizer supported by said first surface of said cover.

7. The apparatus of claim 6 wherein said flexible, substantially non-birefringent cover comprises a plastic.

8. The apparatus of claim 6 wherein said flexible, substantially non-birefringent cover comprises a polycarbonate.

9. The apparatus of claim 6 wherein said flexible, substantially non-birefringent cover comprises polyvinyl alcohol.

10. The apparatus of claim 6 wherein said flexible, substantially non-birefringent cover comprises triacetate cellulose.

11. The apparatus of claim 6 wherein said flexible, substantially non-birefringent cover comprises a material having a retardation no greater than 25.

12. The apparatus of claim 6 wherein said flexible, substantially non-birefringent cover comprises a material having a retardation no greater than 15.

13. The apparatus of claim 6 wherein said flexible, substantially non-birefringent cover comprises a material having a retardation no greater than 5.

* * * * *