Feb. 13, 1934. S. RUPPEL 1,947,230

ELECTRIC CIRCUIT BREAKER

Filed July 29, 1929 3 Sheets-Sheet 1

Fig. 1.

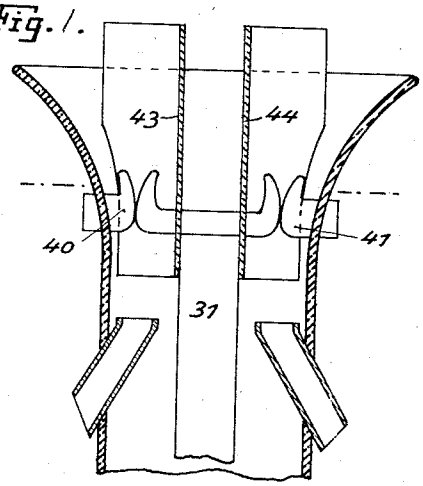

Fig. 3.

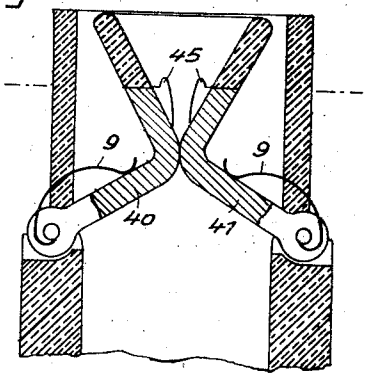

Fig. 4.

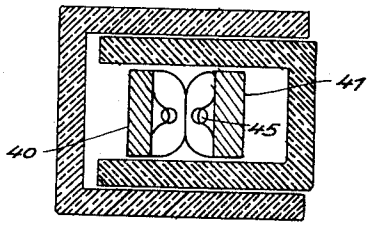

Fig. 2.

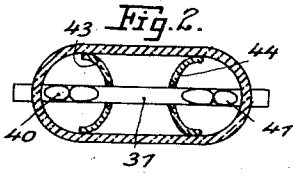

Fig. 5.

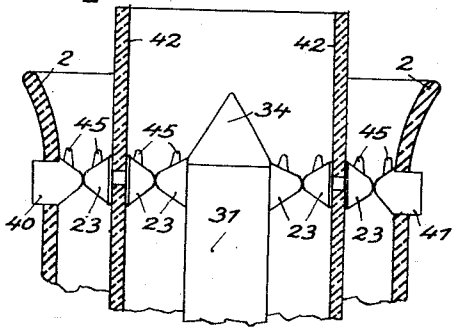

Fig. 7.

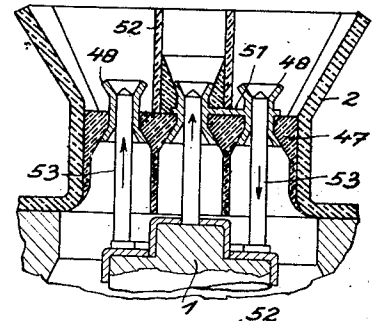

Fig. 6.

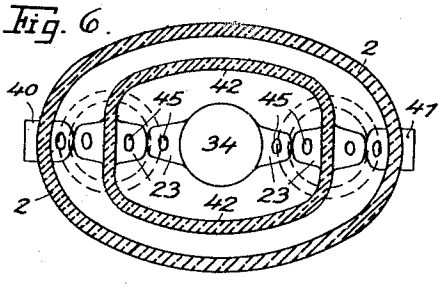

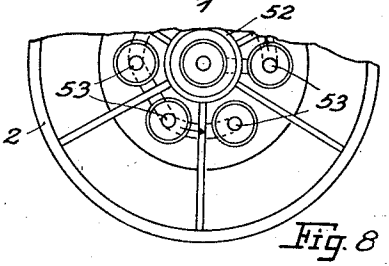

Fig. 8.

Inventor:
Sigwart Ruppel.

Feb. 13, 1934. S. RUPPEL 1,947,230

ELECTRIC CIRCUIT BREAKER

Filed July 29, 1929 3 Sheets-Sheet 2

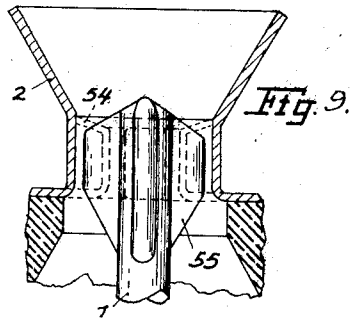

Fig. 9.

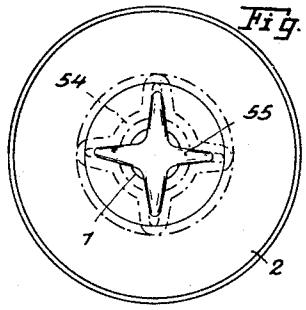

Fig. 10.

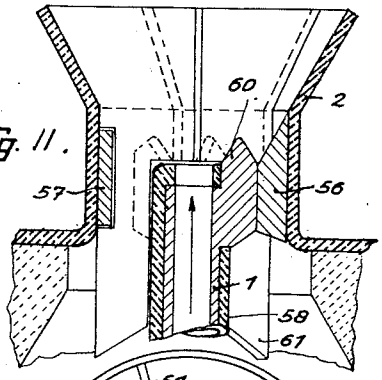

Fig. 11.

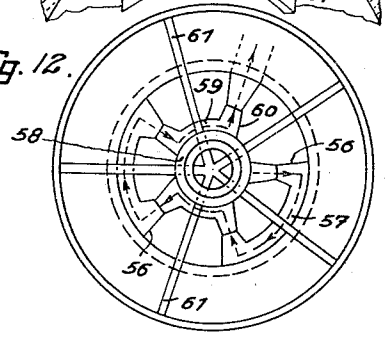

Fig. 12.

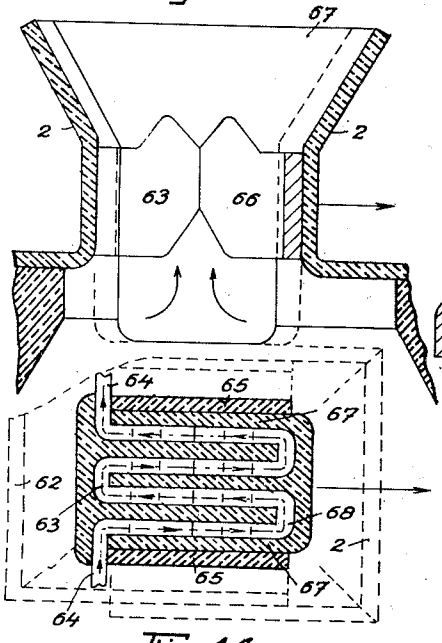

Fig. 13.

Fig. 14.

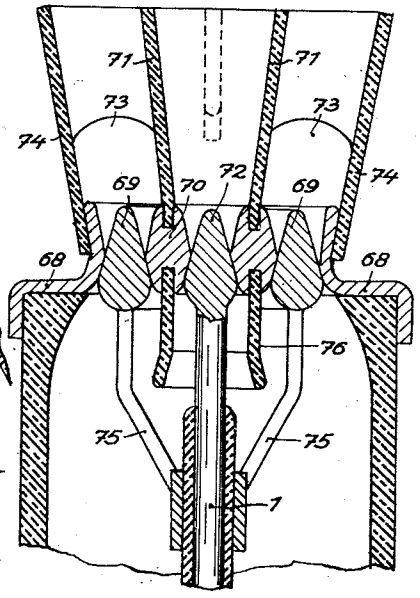

Fig. 15.

Inventor:
Sigwart Ruppel.

Feb. 13, 1934. S. RUPPEL 1,947,230

ELECTRIC CIRCUIT BREAKER

Filed July 29, 1929 3 Sheets-Sheet 3

Fig. 19.

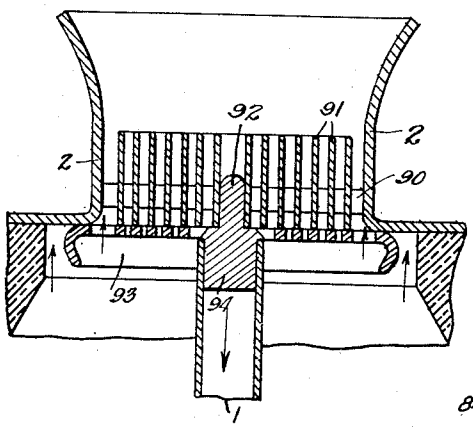

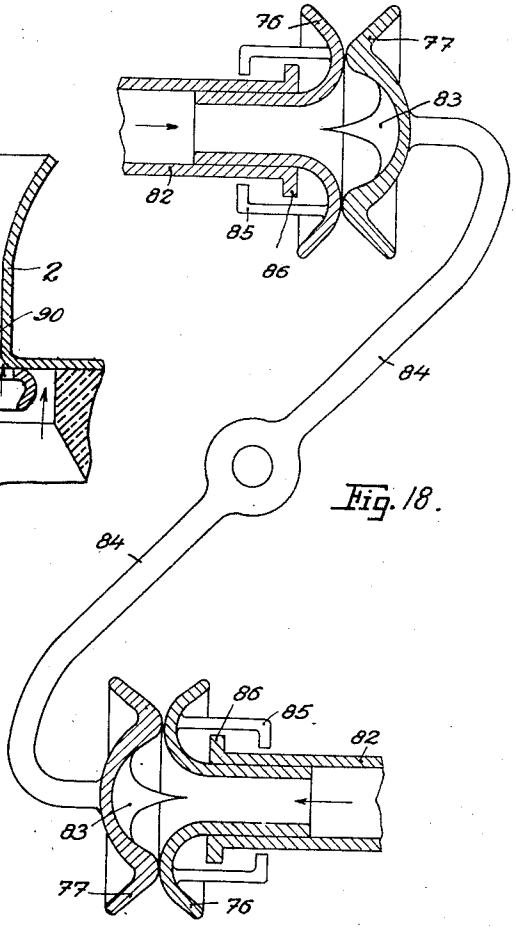

Fig. 18.

Fig. 17.

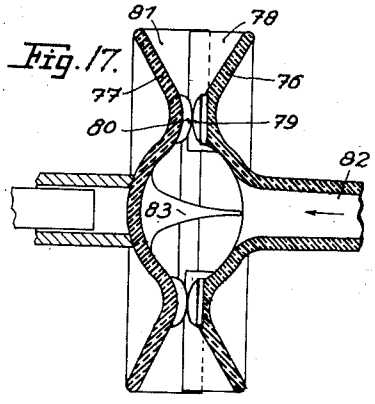

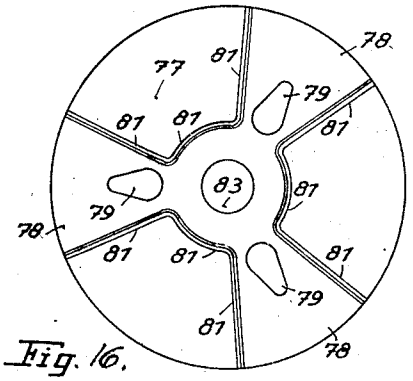

Fig. 16.

Inventor:
Siegwart Ruppel.

Patented Feb. 13, 1934 1,947,230

UNITED STATES PATENT OFFICE

1,947,230

ELECTRIC CIRCUIT BREAKER

Sigwart Ruppel, Frankfort-on-the-Main, Germany

Application July 29, 1929, Serial No. 381,945, and in Germany August 6, 1928

5 Claims. (Cl. 200—148)

My invention relates to electric circuit breakers and more particularly to circuit breakers in which the arc is quenched by compressed air or the like and has for its main object the provision of an improved circuit breaker of the aforesaid or gas-blast type.

In the interruption of high tension arcs by a gas blast it is necessary to ensure by means of stream-lined contacts, and a stream-lined shape of the casing and associated structure the highest velocity of the compressed gas, so that the arc or its base points are at first detached from the electrodes and blasted from the arc gap. It is also necessary that the compressed gas flowing into the space between the electrodes shall envelop the latter completely, so that they are isolated from each other, and consequently also from the arc, by a layer of compressed gas having a sufficiently high dielectric strength so that several times the applied voltage would not reestablish arcing.

The action may be supposed to take place as follows:—On the separation of the contacts the arc forms a zone which is rich in metal and the dense metallic vapour, which is present in the space, which is at first narrow, as a strongly ionized metallic vapour, forms a connection between the electrodes which is practically without resistance.

I. *When the space is narrow* (*a*) the path of the arc has a great stability owing to the strong ionization; (*b*) the cooling action is at first small; (*c*) the influence of the arc is small, as the ions are diverted only slightly; i. e., most of them reach the opposite electrode.

II. *When the space is wider* (*a*) the cooling action at the base points (the craters adhere with a certain strength to the electrode) becomes greater; the cooling action on the arc also becomes greater and an appreciable diffusion occurs; (*b*) the deflection of the ions is such that they fail to reach the base points on the opposite electrode and consequently a further cooling of the base points occurs; the stream of ions is deflected.

III. *Quenching occurs* when the production of ions at the base points is so reduced by direct cooling and by the deflection of the stream of ions (secondary cooling), that it no longer compensates the consumption of ions by ions carried away and recombined (combination of positive and negative charge carriers). The residuum of ions must be so small that a fresh ignition or reestablishment of arcing is no longer possible.

IV. *The succeeding flow of gas under pressure.* The ions are diluted and form a zone having a high resistance to arcing between the electrodes. They are therefore isolated from each other.

When the contacts and the devices for moving them are suitably adjusted, the arc will begin to be interrupted in general only when the current is dying down in accordance with the amplitude; then the stability of the arc decreases and the power of the blast preponderates for a corresponding width of the arc gap (length of the arc). The arc can be quenched when the current is at its zero point (a half period) before it has burned more than a short time.

Switching should be effected the instant the contacts are at the necessary distance apart. As at suitable pressures even very thin layers of gas are sufficient to interrupt the passage of the current the first separation should not result in the space between the contacts being too great; comparatively short distances of separation suffice, in most switches amounting to less than 1 cm. The compressed gas will pass with great velocity through these small openings (the narrowest part of the passage for the compressed gas) and quench the arc if adapted to the lines of flow.

Thus, for example, in the case of contacts surrounding each other, not only one, but a number of points of selected paths for arcing may be provided. In the case of an oval switch member the arrangement may be so designed that sparking occurs across the narrow dimension, the contacts inner and outer being brought as closely together as possible at that point but otherwise being maintained at some distance apart. This may also be achieved by asymmetric movement. In such case the casing may be of insulating material with metal armouring at certain points only, care being taken that arcs are struck only at those points where the heavier metal armourings are fitted, while the other parts are protected from the arc in some measure. It is possible to concentrate the action of the blast on certain points and to prevent the arc from wandering, as by means of longitudinal grooves or walls which are disposed in the direction of the blast and which may consist of metal or insulating material. Grooves may, however, be so provided in the contact members that these grooves or projections form selected points for arcing and a specially powerful blast may be directed on these selected points.

If the casing is to move upon the separation of the contacts, it may move wholly or partially with the contacts. It should not be opened, if possible, before the quenching is completed as the velocity

of the jet of compressed gas must be maintained up to the quenching and the isolating pressure at the quenching point must be maintained even after quenching, as hereinbefore stated.

This can be effected in a simple manner by way of example if the casings, instead of being formed as simple nozzles, are composed of discs, of which the edges, at which the blowing out of the arc is effected, are constructed of stream-line formation, like nozzles. That is to say, the discs may be so formed that the whole edge forms a nozzle distributed over its periphery. The periphery may, however, consist of a series of separate nozzles in which, in each case, a pair of contacts is arranged. The blast would then be directed to these points distributed around the periphery. In this case, however, the break would have to be effected, if possible, during the first period, by overlapping members in order that the compressed gas may not escape laterally. In an extremely simple arrangement the discs comprising halves of the casing would in each case be provided with an annular contact which may also be of stream-line formation, so that the blowing out of the arc can take place with the greatest force at the point of break. Instead of a ring separate contacts may be distributed along the contact periphery of the discs.

The break may occur, as in the previous arrangements, not only at one contact, but at a number of contacts. If special points of break, as auxiliary contacts, spark gaps, etc. be used, these will be most conveniently added on the exterior, advantageously in the expanding part of the compressed gas and be made of a material which vaporizes with difficulty.

The discs may be made relatively light, so that they are moved rapidly when the impact of the compressed gas occurs, without great inertia. If the supply pipes selected be sufficiently wide and the diameter of the discs corresponds thereto, heavy switch impulses and therefore great rapidity of the switching operation may be secured. In order to intensify the switch impulse, and therefore the initial velocity, locking devices may be employed which allow the discs to be separated only when the full pressure bears upon the discs. The velocity may also be increased by suitably shaping the discs. The outer form of the discs may in this case be such that they are opposed by as little resistance as possible in their movement in the surrounding air.

Although generally in switches operating with compressed gas even a simple break suffices, in order to quench currents of great strength and high tensions, greater safety may nevertheless be given to the switch in certain circumstances if, should it be necessary, a multiple break be employed.

If it is not desired to make the entire switch of a number of parts, a main contact may be selected and this contact formed at its end as a multiple break, so that only the final break is a multiple break. This applies both to connections in series and in parallel. In the former case the connection may be so provided that the multiple break is short-circuited at first and the multiple break only occurs when the main contact is opened (connection in parallel).

In the case of a multiple break the contacts may surround each other wholly or partially or may be mounted in a casing surrounding them. The movement of the contacts may in such case be produced in various ways. They move either past each other or away from each other. Very favourable arrangements may be obtained under certain circumstances if the contacts be caused to revolve about an axis. If the contacts are to be moved some distance away from each other, too large a casing would be required if they were moved inside the casing only. For this reason the parts of the casing may be made movable with the contacts and the parts of the casing also moved away from each other. It is of importance to take care that, during the main blowing out of the arc the parts of the casing are still so relatively situated that the jet of compressed gas is effectively guided and held together. This is secured in a favourable manner, for example, if disc-shaped casings be employed, when one disc is moved with the contacts. The arrangement of the contacts may in this case be such that the main contacts are mounted in the interior of the casing and the multiple, that is to say the interrupting contacts, towards the edge of the casing.

My invention will be more fully set forth in the following description referring to the accompanying drawings, and the features of novelty which characterize my invention will be pointed out with particularity in the claims annexed to and forming part of the specification.

Referring to the drawings, Fig. 1 is a fragmentary elevational view, partly in section, of a multiple break circuit breaker embodying my invention; Fig. 2 is a plan view of the same taken along a section of Fig. 1; Figs. 3 and 4 are elevational and plan views respectively of another form of circuit breaker contact structure; Fig. 5 is a fragmentary elevational view partly in section of another form of multiple break circuit breaker; Fig. 6 is a plan view of the same taken along a section of Fig. 5; Figs. 7 and 8 are fragmentary elevational and plan views respectively showing other forms of a multiple break switch; Figs. 9 and 10 are elevational and plan views respectively, partly in section, of switch structure having multiple breaks in parallel; Figs. 11 and 12 are elevational and plan views respectively, partly in section, of switch structure having multiple breaks in series; Figs. 13 and 14 are elevational and plan views respectively in section showing another form of multiple break switch structure; Fig. 15 is an elevational view partly in section of multiple break contact structure in another form of my invention; Fig. 16 is a view showing another form of multiple break contact structure; Fig. 17 is a view, partly in section, of contact structure shown in Fig. 16; Fig. 18 is an elevational view partly in section showing another form of the switch structure shown in Figs. 16 and 17; Fig. 19 is an elevational sectional view of another form of a multiple break switch.

Figures 1 and 2 illustrate a double break, in which the switch member 31 is moved downwards and the shield members 43 and 44 which are carried by the switch member, form at the ends switch spaces or individual gas passages which may be each subjected to a blast separately, when the compressed gas is not to be supplied at the center. The shield members 43 and 44 are preferably of insulation in the present instance and may be moved simultaneously with 31. They must be of such length that a break in the blast space is maintained until there is complete interruption, even after the switching-off movement.

In the arrangement above described the contacts in the closed circuit position are connected in series so that extinguishing of either arc is effective to interrupt the circuit. The separate

blasts of gas at each break increase the dielectric strength of the total arc gap, and effectively preclude the reestablishment of arcing once the circuit is interrupted. The insulating shields 43 and 44, while preventing flashover between the breaks, isolating the same, likewise form individual gas passages for each break so that the exhaust gases of the breaks cannot mingle in the vicinity of the arc. A compact and efficient multiple break switch is therefore provided in a single gas passage in which a movable switch member is operated.

It will be apparent that the relative movement between the contacts and casing may be as desired, the main condition being that the insulating shields 43 and 44 shall function to form individual gas passages for each arc and prevent flash-over between the breaks.

Figures 3 and 4 show a construction in which the break is produced by movement of the compressed gas. The electrodes 40 and 41 close the air exhaust passage in such a way that they are moved as the compressed gas enters. Provision may be made here for the springs 9 or the mechanism which presses the contacts 40 and 41 together to be detensioned or released when the pressure of the compressed gas has risen to a certain amount. The compressed gas can then move and pivot the two electrodes so that a wide break space, as a nozzle-like passage, is formed for switching off the current. On switching on the current contacts 40 and 41 are again brought back into contact with each other and the springs or the mechanism tensioned or locked. Special terminal interruptors or arcing portions 45 of a metal which is difficult to vaporize may form the contact breaking point. These latter may be arranged as shown or directly behind the contacts 41 and 40 so that during the break they are located close to the point where the blast is strongest.

Figures 5 and 6 illustrate a multiple break of four sections in which only one member is moved. The contacts 40 and 41 form the current terminals and the switch member 31 the stationary center member. Between the terminals and center member moves the separating member 42 with the doublesided contacts 23, which are connected through the partition and may be spring biased so that they press elastically against 41 or the contact 31. The insulating sleeve-like casing 42 suitably projects beyond the sleeve 2, if it is to be interposed between the contacts 41 and 31 after the downward movement. If 42 is moved upwards the lower part of 42 will be between 41 and 31. The insulating member 34 may be mounted on the switch member 31 so as to deflect the compressed gas. The sleeve 2 and the switch member 31 may be either oval as illustrated, or circular. The shape of the contacts 23 with the terminal interruptors 45 must be of stream-line form so that no air shadow can arise and so that the blast applied to the terminal interruptors is sufficiently powerful. The insulating structure 42 forms within the main gas passage defined by the casing 2 substantially concentric gas passages for individual gas blasts. A break is positioned, as in the case of Fig. 1, within each passage, the insulating sleeve 42 serving also to isolate the separate arcs.

Figures 7 and 8 illustrate a contact arrangement with interruption points connected in series and arranged in a common sleeve-like nozzle. The nozzle 2 is in this case made of insulating material and is closed at its narrowest point by the insulating member 47. This latter carries the current terminal nozzles 48, connected electrically together in pairs by the cross piece 51. The coacting movable contact 1 terminates in the contact pin 53 and also carries a number of contact pins which are connected together in pairs by the bridge piece 10, and which are insulated from each other and from the contact 1 on which they are mounted. While, at the lower end the interruption points are separated from each other by ribs on the insulating member 47, the arcs are prevented from coalescing in the upper nozzle space by refractory partitions 52. The course of the current is indicated by arrows, and the current is simultaneously interrupted at a number of points. The application of a blast at the points of interruption is effected from below through the nozzles 48. To switch the current off the contact 1 with its pin contacts 53 is moved downwards.

Figures 9 and 10 illustrate a contact arrangement with interruption points connected in parallel. The nozzle or sleeve 2 has projections 54, in which the movable coacting contact 1 engages by means of the ribs 55 in a knife-like fashion. In this arrangement favourable conditions for the flow of the compressed gas and favourable cooling are secured in addition to large areas for the passage of the current.

Figures 11 and 12 illustrate an arrangement of contacts in which the points of interruption are connected in series. In the nozzle or sleeve 2, which is made of insulating material, are arranged the contacts 56 which are connected in pairs by the bridge pieces 57. The movable contact, which is constructed as a hollow contact, has a current supply tube 1 which is surrounded by the insulating tube 58. The coacting contacts 60 which are connected in pairs by the bridge pieces 59 are mounted on the insulating tube 58. In the nozzle or sleeve 2 are also mounted refractory partitions 61 which separate the arcs. The path of the current in this arrangement is indicated in Figure 16 by arrows. The number of points of interruption amounts to five. The blowing out of the arc at the points of interruption takes place both through chambers formed by the nozzle or sleeve 2 and insulating walls 61 and through the hollow contact 1. The switching off movement is made downwards.

Figures 13 and 14 also illustrate a contact arrangement with a multiple break. The insulating nozzle or sleeve carrying the contacts consists in this case of two halves separated from each other. The stationary half 62 of the nozzle carries both the short circuited contact 63 and also the connections 64 which terminate in contacts. Insulating walls 65 separate the contacts from each other. The movable half 2 of the nozzle carries four contacts 66 connected together in pairs, and separated from each other by the insulating walls 67. The walls 67 and 65 engage between the contacts which are opposite each other at any moment. To switch the current off the half 2 of the nozzle or sleeve with the contacts 66 is moved in the direction of the arrow, which indicates a fourfold break of the path of the current indicated in Figure 14 by arrows. The insulating walls prevent any coalescence of the arcs subjected to the blast from below.

Figure 15 shows an arrangement in which one current terminal is on the movable switch member 1 and the other current terminal on the contact 68 which is carried at the upper end of the switch chamber. The contact ring 69 is carried by the contact member 1 and is insulated there-

from. The current then passes from 68 to 69, from 69 to the contact ring 70, which is secured to the insulating nozzle 71, and then passes through the point of the contact 72 to the movable contact 1. The insulating nozzle 71 is fixed by three or more ribs 73 in the outer insulating nozzle 74. The ribs 73 must be so disposed that they are at such a distance from the focus of the arc that they cannot be easily destroyed. If necessary they may also be constructed as members to be inserted; they may further be made of a metal and may be mounted in an insulated state. If their arrangement and disposition are correct they will act favourably on the quenching of the arc. The position of the nozzles 71 and 74 relatively to each other must be such that favourable streamlines are present in each chamber and the length of the nozzles must be such that the arcs cannot meet. In the arrangement illustrated, the compressed gas is not checked in its passage by the arms 75, to which the ring 69 is attached, and it can therefore flow directly upwards. In order to ensure a gas supply to the nozzle 71 an insulating pipe 76 is provided at the lower end of the ring 70. This pipe must extend for a sufficient distance into the switch chamber so as to prevent the arcs from being driven laterally towards each other below the point of separation. The contact members 69, 70, 72, may be constructed as sliding contacts instead of as pressure contacts.

In the above described arrangement the contact structure is connected in series and is provided with insulating means, as in Fig. 5 for example, forming within the main gas passage individual passages so that each break is subjected to a separate blast of gas and the arc gases from each break are conducted away so that there is little danger of flashover between the breaks.

The concentric arc gaps by reason of their relation to the main gas passage or source of pressure, are subjected to intensive cooling by the gas blast with the result that once interrupted the arc is not readily reestablished.

Figures 16 and 17 illustrate the manner in which a multiple series connection can be provided as an arrangement consisting of disc-like casings. The discs 76 and 77 may, in this case, be flat and formed with bulges such that, when the two discs are in contact, the bulge on one disc and the corresponding bulge on the other disc form a nozzle-shaped chamber between them. The contacts 79 and 80 are mounted on the discs, 79 being mounted on one disc and 80 on the other. Instead of making the disc surfaces flat with bulges 78 for the contacts, the discs may be arched and only the walls 81 form or limit the nozzle-shaped chambers for the blast. The walls 81 would be of such height that when the discs are together the walls 81 of the one disc overlap those of the other disc so that when the discs are moved apart the gas blast cannot escape laterally. If the discs are flat and provided with bulges 78, the walls 81 of the two discs must be so proportioned that the compressed gas will not escape laterally, when the discs are slightly separated. The contacts 79 and 80, which may bear resiliently against each other, must be so shaped (that is to say they may either be drop-shaped or of any other shape following stream lines) that no air shadow is produced. They may be so constructed that they conform almost completely to the outline of the casing so that they lie substantially in the direction of the casing. They may also be provided with auxiliary arcing contacts. The triple break shown in Figure 16 may equally well be provided as a sextuple or multiple break. In order to make the surface resistance as great as possible radial ribs may be provided on the discs. The discs may be covered with ceramic material or they may be made wholly or partially of such material. The blast for quenching the arc is delivered through the pipe 82 and the jet of compressed gas is deflected along stream lines at the deflector 83 so that it is divided at the periphery or the point of contact (the nozzle-like chambers 78) and impinges at this point with the greatest force on the point of break. The part 78 of the casing may be stationary and the part 81 be moved by the blast directed on it.

Figure 18 illustrates how a multiple break may be produced by connecting for example two discs forming casings in series. The arrangement may be such that the parts are disposed in a straight line, for example, both parts 77 of the casings may be arranged so as to be movable in a straight line. When the blast is directed through both parts 76 of the casings the parts 77 are moved forward and thus a separation at two points occurs simultaneously. The switching off operation may be initiated by opening a valve or valves in the conduits 82, the gas blast acting on the discs 77 opening the switch and extinguishing arcing. To switch on again only the usual locking devices of the springs (not shown) would have to be released and the parts 77 of the casing released from the switching off position. The straight line movement may alternatively be replaced by a circular movement as illustrated in Figure 18. The compressed gas entering through the conduit 82 flows towards the deflector 83 and moves the halves 77 of the casing, which are arranged to revolve on the arms 84 in a circular path. The forces of the two switch points act conjointly in the same direction. In order to maintain as high a switching velocity as possible provision may be made that the break shall not be hindered by friction or inertia but that the casing parts 76 and 77 shall be first held together as a unit for a certain distance and moved together under the action of the switching impulse. After such movement the part 76 of the casing 77 shall be retained by engagement of the lugs 85 with the collar or flange 86 and disconnected by the impact. At this moment the part 77 of the casing, which is thus released, would have great velocity so that the parts 76 and 77 of the casing can be separated with sufficient rapidity. Such arrangements can easily be so constructed that they can be inserted in place of separating or disconnecting switches but that, notwithstanding, they can interrupt currents. Moreover, a single spring actuated arm may be used.

The feature wherein the contacts themselves form a nozzle-shaped gas-exhaust passage upon separation thereof for the arc-interrupting blast, as shown for example by Figs. 3, 4, 16, 17 and 18, is specifically disclosed and claimed in a divisional application for Gas blast switches, Serial No. 690,682, filed September 23, 1933.

Figure 19 shows a contact arrangement with a multiple spark gap. A number of concentric tubes 91 insulated from each other are secured in the nozzle 2 by means of the insulating rod 90. The coacting contact consists of the pipe 1 for the current, which pipe carries not only the contact pin 92 but also the contact ring 93 by ribs with a hub 94. This opposed contact is moved down-

wards when the current is switched off, the circuit 1, 93, 94 to 2 being broken and an arc struck at 93. The innermost tube 91 has however still the potential of the contact 1 through the pin 92. The arc will therefore bridge over the small spark gap between the several tubes 91. The arc is quenched by a blast of compressed gas, which issues from below through the movable contact and the concentric tubes 91. The break at the distance represented by the voltage occurs during the further course of the switching off movement by the pin contact 92 being moved from the innermost tube 91 to the separation distance.

I claim:—

1. A multiple break circuit interrupter of the gas-blast type comprising relatively movable contacts forming breaks in series mounted within a main gas passage, and insulating structure coacting with said contacts forming separate gas passages within said main passage for each break, said insulating structure isolating said breaks and preventing flash-over between the same.

2. A multiple break circuit interrupter of the gas-blast type comprising relatively movable contacts forming a plurality of breaks in series within a main gas passage, insulating means mounted on and carried by part of said contact structure, said means forming within said main gas passage individual gas passages within which said breaks are separately positioned.

3. A multiple break circuit interrupter of the gas-blast type comprising a casing having a main gas passage, fixed and movable contacts mounted within said casing forming breaks in series, and insulating shields carried by the movable contact structure partly surrounding each break and forming therefor within said main passage separate gas passages.

4. A multiple break circuit interrupter of the gas-blast type comprising a casing having a main gas passage, fixed and movable contact structure mounted within said passage forming a plurality of breaks in series, and an insulating sleeve on which relatively movable contact structure is mounted forming substantially concentric gas passages within said main passage in which said breaks are positioned.

5. A multiple break circuit interrupter of the gas-blast type comprising a casing forming a main gas passage, relatively movable contact structure mounted within said casing, said structure comprising a plurality of concentric rings forming a plurality of concentric breaks in series, an operating rod effecting relative movement of said contact rings and insulating structure coacting with said rings forming separate gas passages in which said breaks are individually positioned.

SIGWART RUPPEL.