Jan. 18, 1927. 1,614,621

I. E. McCABE

MERCURY TUBE SWITCH

Filed July 9, 1923 3 Sheets-Sheet 1

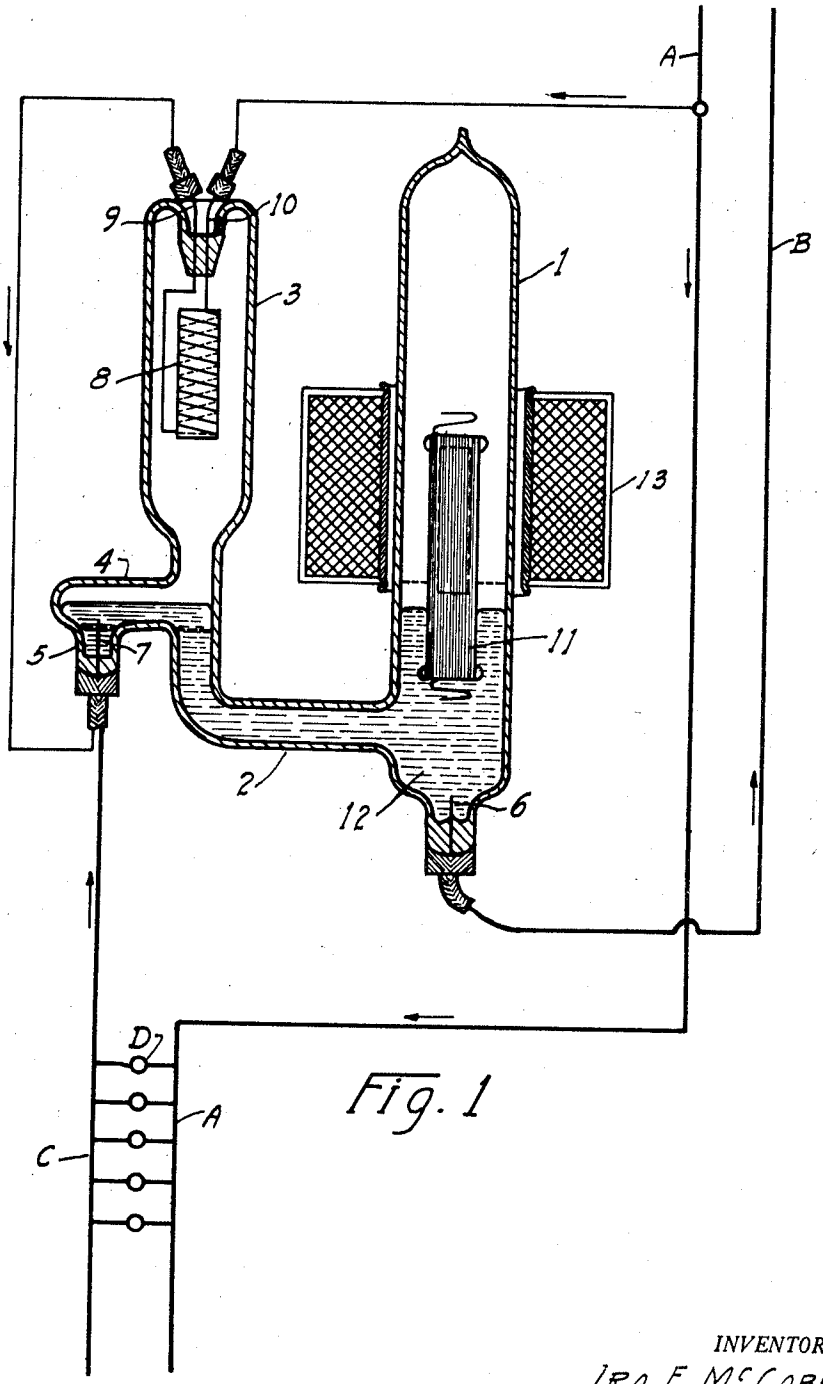


Fig. 1

INVENTOR.
IRA E. McCABE
BY Lanzam Mann
ATTORNEYS.

Jan. 18, 1927. 1,614,621

I. E. McCABE

MERCURY TUBE SWITCH

Filed July 9, 1923 3 Sheets-Sheet 2

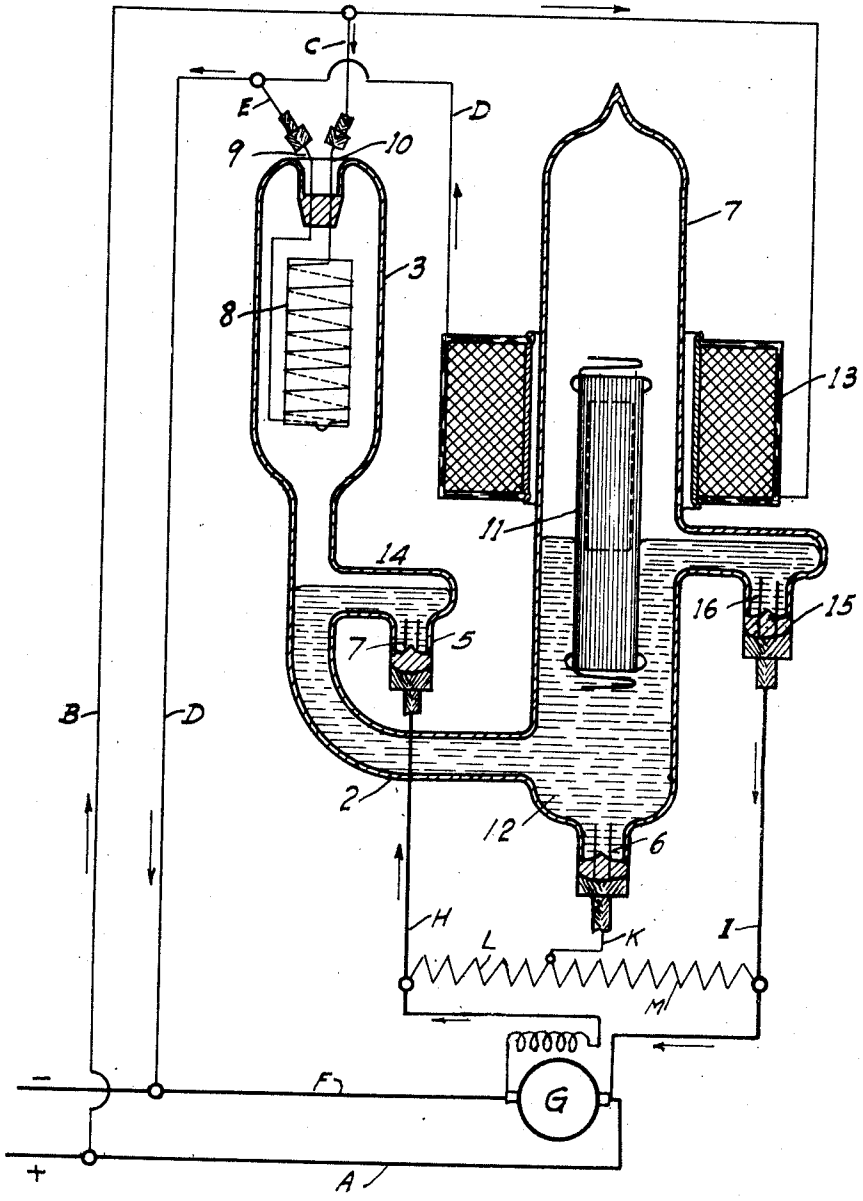


Fig. 2

INVENTOR.
IRA E. McCABE
BY Langdon Morris
ATTORNEYS.

Jan. 18, 1927. 1,614,621

I. E. McCABE

MERCURY TUBE SWITCH

Filed July 9, 1923 3 Sheets-Sheet 3

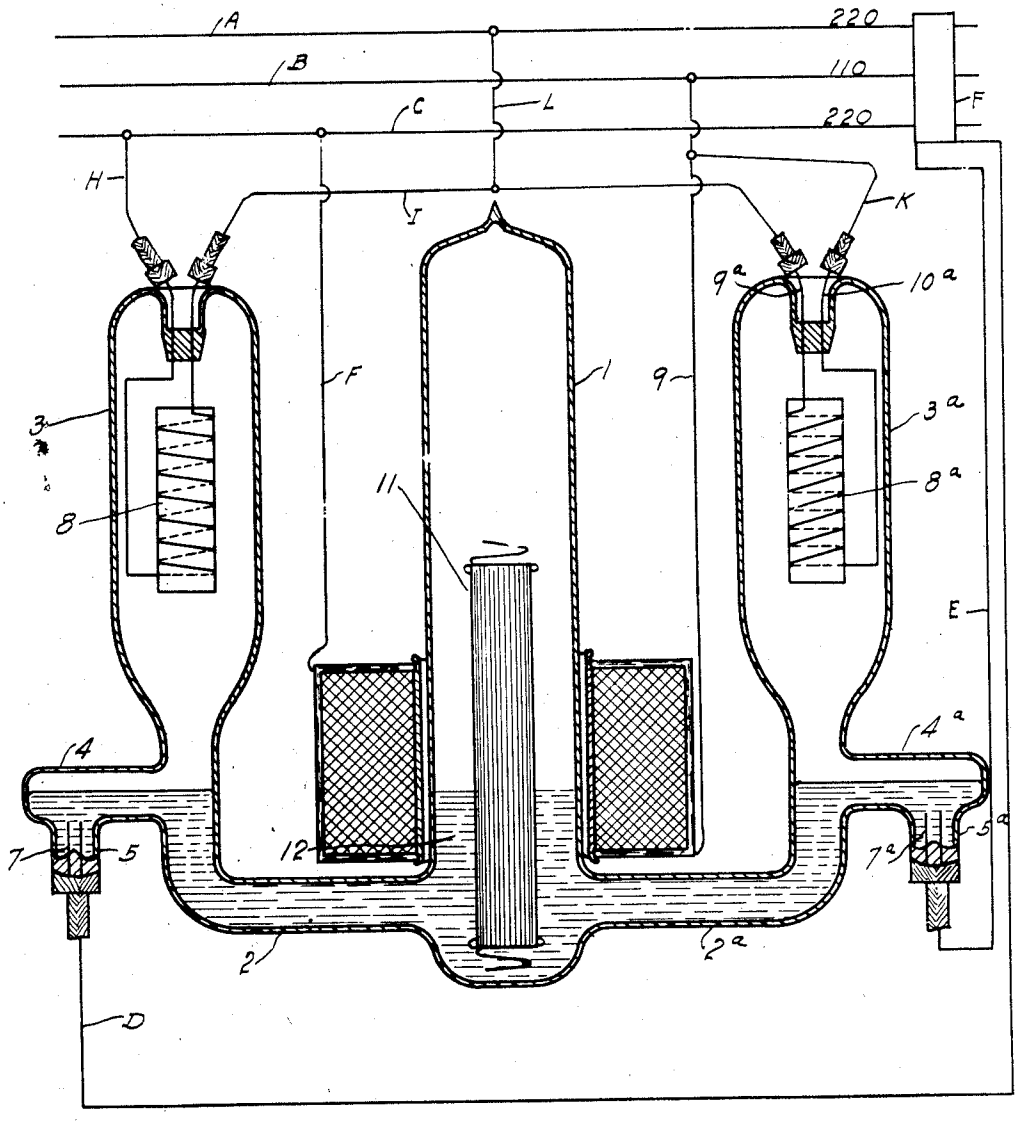


Fig. 3

INVENTOR.
IRA E. McCABE
BY Langson Mann
ATTORNEYS.

Patented Jan. 18, 1927. 1,614,621

# UNITED STATES PATENT OFFICE.

IRA E. McCABE, OF CHICAGO, ILLINOIS.

## MERCURY-TUBE SWITCH.

Application filed July 9, 1923. Serial No. 650,233.

This invention relates to improvements in electric switches and more particularly to mercury tube switches the operation of which is adjustably controlled by temperature and electricity combined.

It is an object of this invention to construct a mercury tube switch with one or more branches providing wells in which the contacts are located and are adapted to be covered and uncovered by the mercury to make and break the circuit therethrough and with bulbs or enlarged extensions in the branches above the mercury containing inert gases with an electric heating unit in one branch and a metal float in the other which latter is surrounded on the exterior by a magnet adapted to cooperate with the metal core. Current passing through the heating unit expands the gas in that bulb and depresses the mercury to break the circuit by uncovering a contact in that branch or close the circuit by raising the level of the mercury and covering a contact in another branch or both. The metal float surrounded by the exterior magnet may be raised or lowered in the mercury by the magnet and will adjustably control the level of the mercury in the tube and may make or break the circuit through the mercury to the contact or may be operated in conjunction with the heating unit to adjust the time of operation thereof.

This device is of advantage wherever it is desirable to provide an independent time control for the actuation of the operation of the switch such as in battery charging devices, sign flashing, voltage regulation, and safety devices in an electric current to break the circuit at a definite load as well as in connection with motor starting switches.

While the preferred forms of this invention are illustrated upon the accompanying sheets of drawings, it is to be understood that minor detail changes may be made without departing from the scope thereof and the application of this invention is not limited to the uses described herein as it is adaptable by other arrangements of contacts, bulbs, heat units and floats for many other purposes.

In the drawings:

Figure 1 is a view partly in central vertical section through one form of this improved switch.

Figure 2 is a similar view through a modified form.

Figure 3 is a similar view through another form.

Figure 1 illustrates the simplest form of this invention employing a vertical tube 1 having a branch 2 from the side thereof near the bottom of the tube leading into a vertical enlargement or bulb 3 and having a horizontal projection 4 containing a well 5 at the end thereof. A contact 6 is inserted at the bottom of the vertical tube 1 and another 7 at the bottom of the well 5. An electric heating unit 8 is suspended in the bulb 3 having its contacts 9 and 10 passing through the top of the bulb. An iron or other magnetic sensitive metal float 11 which will not form an amalgam is arranged within the vertical tube 1. Mercury 12 is introduced in the tube until the mercury supporting the float passes into the horizontal projection 4 and fills the well 5 and its level is about the center of said projection. Inert gases are introduced into the tube 1 and bulb 3 above the level of the mercury and the tube and bulb closed. A magnet 13 is arranged about the exterior of the tube 1 in such a position as to embrace the upper portion of the float 11. If the magnet is an electric magnet it is preferably stationary as the energizing thereof will draw the float upwards. If the magnet is a permanent one it is provided with a sliding movement over the tube 1 so that its upward movement will draw the float 11 upward and its downward movement will draw the float downward.

Figure 1 shows the mercury tube switch with the parts in normal position and the circuit closed through the mercury 12 from contact 6 to contact 7 which is the circuit designed to be controlled by said switch. The operating element of the switch is the heating unit 8 and the adjustable time control for the actuation of the operating element is the magnetically adjustable float 11.

The heating unit 8 may be in an independent circuit from that which the switch controls or may be in a shunt from that circuit and as the current passes through the unit it raises the temperature within the bulb 3 expanding the gases therein and depresses the level of the mercury below it in the branch 2 until its level is below the bottom of the horizontal projection 4. The cohesive property of mercury causes that in the projection 4 to cling to that in the well 5 and then break with a snap action to follow the main body of mercury down branch 3 as its level is de-

pressed below the bottom of the projection 4 and with the inert gas filling the said projection there is little or no arcing when the circuit is broken with the contact through the mercury remaining in the well 5.

The time of actuation of the operating heat unit 8 depends upon the level of the mercury in the projection 4, and the amount of current passing through the heat unit the higher the level the longer time or more current it will take to break the circuit.

The level of the mercury in the projection 4 before the heat unit 8 is energized depends upon the position of the float 11 within the mercury 12. When the magnet 13 is an electromagnet and is de-energized or is a fixed magnet in normal position and the heat unit 8 de-energized the level of the mercury in the projection 4 and tube 1 and the relation of the float to the mercury 12 are normal, it will take a definite amount of current to raise the temperature of the heat unit 8 to expand the gas in bulb 3 sufficiently to depress the level of the mercury enough to break the circuit at contact 7 in a definite length of time. The energizing of the electro-magnet or the raising of the fixed magnet 13 draws the float upward causing it to displace less of the mercury 12 and lower the normal level of the mercury in projection 4 and tube 1 which will decrease the length of time required for the same amount of heat in bulb 3 to break the circuit at contact 7. An increase in voltage of the current passing through the electro-magnet will continue to draw the float 11 upwards decreasing the time for the same amount of heat in bulb 3 to break the circuit and conversely as the voltage through the electro-magnet decreases the float 11 approaches its normal displacement of mercury and the time of operation aproaches the normal also. A fixed magnet may be caused to slide upon the exterior of the tube 1 by manual or any desired mechanical means, such as a pressure controlled Bourdon tube, and as it moves upward from normal it will raise the float upward lessening the time the same amount of heat in bulb 3 will break the circuit through contact 7. Lowering the fixed magnet below normal on tube 1 will cause the float 11 to descend lower into the mercury 12 and consequently displace more mercury, raise the level of the mercury in tube 1 and projection 4 and increase the time beyond normal for the same amount of heat in bulb 3 to break the circuit through contact 7.

The wiring diagrammatically shown in connection with Figure 1 illustrates the application of this invention as a sign flashing unit, and as wired may be for alternating or direct current. As shown the positive conductor A from the source of current is shunted so that part of the current passes through the heating element 8, contact 7, through the mercury 12 to contact 6 and thence through conductor B to the source of current. Before the heat generated by the element 8 expands the gas in bulb 3 to depress the mercury sufficiently to break the circuit between contact 7 and 6, the current from conductor A passes through the branch to one side of the lamp line, through the lamps D to the lamp line on the other side, through the conductor C to contact 7 and thence through the mercury and contact 6 to conductor B, completing the circuit through the lamps. The gas expanding to break the circuit at contact 7 also breaks the circuit through the lamps D. The position of the float 11 in the mercury regulates the amount of mercury in arm 4 which also regulates the time or frequency of making and breaking the circuit through the lamps to flash them.

Figure 2 illustrates a modification in which the parts are all the same as those in Figure 1 with the exception that tube is provided with a horizontal projection containing a well 15 at the end thereof into which projects the contact 16. This projection may be in line with projection 4 or may be above it, as shown. In the latter case the circuit between contact 6 and 16 is normally broken but when the expanding gases in bulb 3 depress the level of the mercury in branch 2 sufficiently to break the circuit between contact 6 and 7, the level of the mercury 12 will be raised sufficiently to close the circuit between contact 6 and 16. In this form the magnet 13 adjusts the position of the float 11, in the same manner as described in connection with Fgure 1, and thereby controls the time the circuit between contact 6 and 7 is broken and will likewise control the time the circuit between contact 6 and 16 is closed. The relation between the levels of projections will also effect the normal time for closing the circuit between contact 6 and 16.

This figure illustrates the wiring in diagram when this invention is employed as a voltage control and regulator for both rapid and moderate increase or decrease in voltage. In this construction and arrangement the service line conductor is provided with a shunt B to the solenoid 13 with a return connection D to the other service line conductor F. The shunt B is also provided with a shunt C to the heating coil 8 with a return connection E to conductor D. The contact 7 and 16 are connected by conductors H and I to the field of the generator G with a resistance L and M in connection between them. Contact 6 is connected by conductor K to the resistance unit so that the portion L is approximately one half of the portion M.

The parts are shown in their non-opera-

tive position with the circuit from the field passing through conductor H, contact 7, mercury 12, contact 16 and conductor I and subnormal voltage passing through the heating unit and solenoid, but upon a sudden increase in voltage the solenoid 13 quickly lifts plunger 11 and breaks the field circuit at contact 16, the field circuit from the mercury passing through contact 6, through conductor K, resistance M to field through conductor I. If this resistance is not sufficient to reduce the voltage to normal the circuit through connections C and E, energizing the heating unit 8 causes the gas in the bulb 3 to further expand depressing the mercury to break the field circuit at contact 7 so that the field current will pass through both resistance units L and M, the combined resistance of which being sufficient to reduce the voltage in the service line to normal. Should the increase in voltage be gradual, the shunt circuit passing through the heating unit 8 will gradually expand the gas to break the circuit at contact 7 and gradually energize the solenoid to raise the plunger 11. When the increase in voltage has caused the field current to pass through the resistance element L and M there is a sudden drop or decrease in voltage to normal, the shunt circuit B—D will be reduced, the solenoid 13 will drop the plunger 11 to close field circuit through contacts 6 and 16 and cut out resistance element M first and the cooling of the gas will then complete the field circuit through contact 7, mercury 12 and contact 16.

If desired additional tube switches may be employed arranged in series with the resistance elements also arranged in series enabling fine steps of control in multiple.

Another form of this improved mercury tube switch is shown in Figure 3 in which the tube 1 is provided with oppositely disposed branches 2 and $2^a$ leading into bulbs 3 and $3^a$ and each having projections 4 and $4^a$ provided with wells 5 and $5^a$ into which project the contacts 7 and $7^a$. In other words the additional parts are similar in all respects to the corresponding parts shown in Figure 1. The tube 1 contains the float 11 surrounded by the magnet 13 and raises and lowers the float to control the time of breaking the current from contacts 7 and $7^a$ to contact 6. In this form the projections 4 and $4^a$ may be in the same plane, as shown, or one may be above the other, as projections 4 and 14 in Figure 2, when it is desired to break one circuit when the other is closed.

The wiring shown in diagram in connection with this form of tube switch illustrates the application of this invention as a safety device or cut out in a three phase circuit to prevent under voltage or single phasing A, B and C indicate the service lines, A and C being 220 volts and B 110 volts. In this form contacts 5 and $5^a$ are connected by conductors D and E, respectively, to a magnetic switch F connected to close the service line circuit to the source of current as long as it is in circuit D—E and to break the service line circuit when D—E is broken. The solenoid 13 is arranged in shunt circuit by conductors F and G with the 220 volt line C and 110 volt line B so that under normal conditions the plunger 11 is held within from the mercury 12. The heating elements 8 and $8^a$, the latter of twice the resistance of the former, are arranged in series by conductors H, I and K between the 220 volt line C and 110 volt line B and also connected by conductor L to 220 volt line A. A drop in voltage or the blowing out of a fuse in any one of the three service lines A, B or C will disturb the balance of the mercury in the tube to break the circuit through the magnetic switch and discontinue the current through the service lines.

Claims:

1. In an electric switch, a mercury tube, mercury therein, a plurality of electric contacts entering the tube and adapted to be connected by the said mercury, means within the tube adapted to make and break the mercury connection between the said contacts, and means within the tube adapted to control the time of operation of the said first means.

2. In an electric switch, a sealed mercury tube having a plurality of electric contacts entering therein, mercury within the tube adapted to connect and disconnect said contacts, electrically operated means wholly within the tube adapted to actuate the mercury to make and break the connection thereby with said contacts, means wholly within the tube adapted to control the time of operation of the said first means, and electrical means wholly without the tube adapted to actuate said last means.

3. In an electric switch, a sealed mercury tube, mercury therein, a plurality of electric contacts entering the tube and adapted to be electrically connected to each other by said mercury, and electric heating unit within the tube adapted to displace the mercury to break the connection between the contacts, a magnetically actuated member within the tube adapted to alter the level of the mercury therein thereby altering the time of breaking said mercury connection and an electrical means wholly without the tube adapted to control the relation of said member to the mercury.

4. In an electric switch, a sealed mercury tube containing a gas having a plurality of integral branches leading therefrom, mercury within the tube and extending partially into said branches, a plurality of electric contacts entering said tube adapted to be covered and uncovered by said mercury

to make and break electric connections between said contacts, a heating element co-acting with the confined gases above the mercury in one branch to cause the mercury to uncover one of the contacts, a float in the mercury in another branch and means co-acting with the float to alter its displacement in the mercury whereby the height of the mercury in the first said branch is altered to control the time of operation of the heating element.

5. In an electric switch, a sealed mercury tube having a plurality of integral branches leading therefrom, mercury within the tube and extending partially into said branches, a plurality of electric contacts entering into the tube adapted to be covered and uncovered by said mercury to make and break electrical connections between said contacts, gases contained in the branches above the mercury, a heating element co-acting with one of the branches to expand the gas therein to depress the level of the mercury in that branch to uncover one of the contacts and break the circuit through the mercury, means to actuate the heating element, a float in the mercury within another branch, means wholly without that branch co-acting with the float to alter the submergence of the float in the mercury thereby altering the level of the mercury in the first branch whereby the time required for the gases expanded by the heating element to break the circuit through the mercury is controlled by the displacement of the float.

6. In an electric switch, a sealed mercury tube having two vertical branches connected by a horizontal passage with a horizontal projection from one branch, a depending well in said horizontal passage and horizontal projection, electric contacts entering each of said wells, mercury within the tube normally at a level to enter the horizontal projection and adapted to complete a circuit between said contacts, gases in the branches above the mercury, an electric heating unit within the branch having the projection, connections from said unit passing through the walls of that branch, the energizing of said unit expanding the gas in that branch and forcing the level of the mercury down to break the circuit between the well contacts, a metal plunger in the other branch floating in the mercury, a magnet surrounding the outside of that branch adapted to move the plunger up and down in the mercury to raise and lower the level thereof in the other branch to control the time required by the heating unit to break the circuit through the well contacts.

7. In an electric switch, a sealed mercury tube having two vertical branches connected by a horizontal passage with horizontal projections from each branch, a depending well from each horizontal projection and from the horizontal connecting passage, electric contacts entering each of said respective wells, mercury within the tube normally at a level to enter said horizontal projections and adapted to complete a circuit through the passage between the contacts in the projections, gases enclosed in the branches above the mercury, an electric heating unit in the space above the mercury in one branch having connections passing through the walls of that branch which when energized expands the gas and forces the mercury over into the other branch breaking the circuit between the contacts in the projections but maintaining the circuit between the contacts in the other branch and horizontal connecting passage, a metallic float in the other branch, a magnet surrounding the outer walls of that branch adapted to move the float up and down in the mercury arranged so that the upper end of its movement lowers the level of the mercury in that branch to break the circuit between the contacts in the projections maintaining the circuit between the contacts in the other projection and the horizontal passage, and upon movement into the mercury the level of the mercury in the other branch is raised thereby controlling the length of time required for the heating unit to break the circuit through the contact in that branch.

IRA E. McCABE.