(No Model.)

M. CAVANAGH.

CAR COUPLING.

No. 539,932. Patented May 28, 1895.

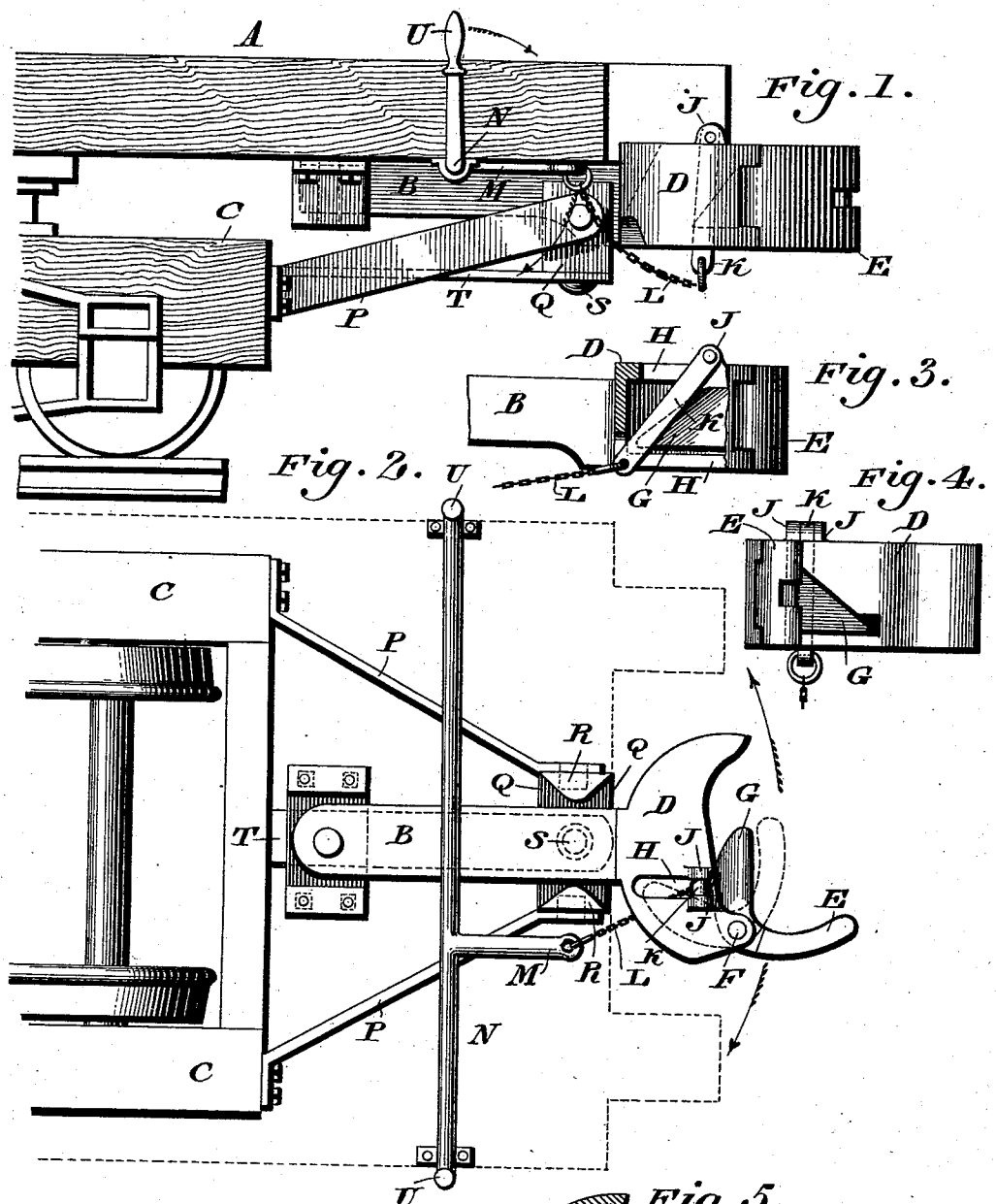

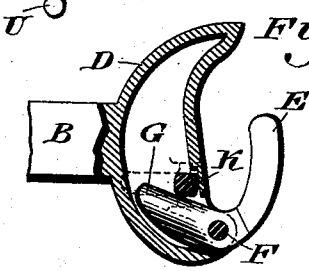

WITNESSES:

P. H. Nagle.

L. Douville.

INVENTOR

Michael Cavanagh

BY

John A. Diedersheim.

ATTORNEY.

THE NORRIS PETERS CO., PHOTO-LITHO., WASHINGTON, D. C.

UNITED STATES PATENT OFFICE.

MICHAEL CAVANAGH, OF PHILADELPHIA, PENNSYLVANIA, ASSIGNOR OF ONE-THIRD TO MATTHEW DITTMANN, OF SAME PLACE.

CAR-COUPLING.

SPECIFICATION forming part of Letters Patent No. 539,932, dated May 28, 1895.

Application filed May 15, 1894. Serial No. 511,285. (No model.)

To all whom it may concern:

Be it known that I, MICHAEL CAVANAGH, a citizen of the United States, residing in the city and county of Philadelphia, State of Pennsylvania, have invented a new and useful Improvement in Car-Couplings, which improvement is fully set forth in the following specification and accompanying drawings.

My invention consists of a car coupling formed of a draw-bar having a head, a knuckle pivoted thereto, a lever for locking the heel of the same after it has been moved into coupled position, means whereby said draw-head is moved with the truck of the car, and means for actuating the coupling device from the platforms or outside of the car, as will be hereinafter set forth and claimed.

Figure 1 represents a side elevation of a car-coupling embodying my invention. Fig. 2 represents a plan view of the coupling, the platform of the car being removed. Fig. 3 represents a side elevation of the draw-head, partly broken away. Fig. 4 represents an elevation of the opposite side of said draw-head, showing the interior thereof. Fig. 5 represents a sectional view on the line *x x*, Fig. 3.

Similar letters of reference indicate corresponding parts in the several figures.

Referring to the drawings, A designates the platform of a car, having the draw-bar B suitably pivoted to the under side thereof.

The draw-bar B is provided with a recessed draw-head D, which has the knuckle E pivotally attached thereto by means of the pin F, said knuckle having an inclined heel G, rearward of said pin F, which is adapted to be moved into the recess in the draw-head when the cars are coupled.

H designates slots in the top and bottom walls of the draw-head, on the top wall whereof are ears J, to which is pivoted a lever K, which plays in said slots H and the recess of the draw-head, and has secured to it a chain L, which is suitably attached to the arm M of a rock shaft N, the latter being properly journaled under the platform A of the car, and having handles U, said lever being adapted to engage with the heel G of the knuckle E, and prevent turning thereof, when the same is in position, as shown in Fig. 5.

P designates brackets whose rear ends are secured to the truck C, and whose front ends carry the recessed guide-block Q, on whose inner faces are tongues R, between which the draw-bar B is permitted to vibrate, said block being connected by the bolt or pin S, with the supporting bar T, the latter being secured to the truck C, said block, bracket and support vibrating together, while the draw-bar vibrates independent of the same during the oscillations of the car and of the coupling and the latter may thus always be centered with respect to the tracks.

The operation is as follows, the parts being in the position shown in Fig. 1: When the couplings of two cars come together, the heels G of the knuckles E are struck and forced in, raising the levers until the said heels have passed the same, whereby the lever falls and engages with the back of the knuckle, the coupling thus being accomplished. When it is desired to uncouple the cars, either of the handles U is moved in the direction of the arrow, thus drawing the chain L, whereby the lever K is raised clear of the heel G, so that the knuckle E swings or turns outwardly, and is disengaged from the opposite coupling.

Having thus described my invention, what I claim as new, and desire to secure by Letters Patent, is—

1. In a car coupling, a draw head, a truck with projecting brackets, a recessed guide block for said bar at the front end of said bracket and a supporting bar with which said block is connected by an axial pin, said parts being combined substantially as described.

2. A car platform having a draw bar pivotally secured thereto, a car truck with forwardly projecting brackets, and a recessed guide block carried at the front end of said brackets, said bar being supported on said

block and freely moving in the recess in the same, said parts being combined substantially as described.

3. The brackets P, the guide-block Q with tongues R, the coupling head D, and the draw-bar B which carries said head and is adapted to vibrate within said block, in combination with a supporting bar T which carries said block, the said bar being adapted to be attached to the truck of the car, substantially as described.

MICHAEL CAVANAGH.

Witnesses:
JOHN A. WIEDERSHEIM,
E. H. FAIRBANKS.