PCT WORLD INTELLECTUAL PROPERTY ORGANIZATION
International Bureau

INTERNATIONAL APPLICATION PUBLISHED UNDER THE PATENT COOPERATION TREATY (PCT)

(51) International Patent Classification 5 : A47K 5/12	A1	(11) International Publication Number: WO 93/05693
		(43) International Publication Date: 1 April 1993 (01.04.93)

(21) International Application Number: PCT/GB92/00104

(22) International Filing Date: 17 January 1992 (17.01.92)

(30) Priority data:
9119658.4 13 September 1991 (13.09.91) GB

(71) Applicant *(for all designated States except US)*: APPOR LIMITED [GB/GB]; Duffield Road Industrial Estate, Little Eaton, Derby DE2 5EG (GB).

(72) Inventor; and
(75) Inventor/Applicant *(for US only)* : WILLIAMSON, Martin [GB/GB]; Green Cottage, Moor Lane, Kirk Ireton, Derbyshire DE4 5JZ (GB).

(74) Agent: DREVER, Ronald, Fergus; Swindell & Pearson, 48 Friar Gate, Derby DE1 1GY (GB).

(81) Designated States: FI, NO, US, European patent (AT, BE, CH, DE, DK, ES, FR, GB, GR, IT, LU, MC, NL, SE).

Published
With international search report.

(54) Title: CONTAINERS AND DISPENSERS FOR THE CONTENTS THEREOF

(57) Abstract

A container (10) for a dispenser (100) has a reservoir (12) containing soap in the form of a stiff gel (14). In a neck portion (16) of the container (10) there is located a resilient tube (18) which is retained in position by shoulders integrally formed on the neck portion (16). With the tube (18) in its open condition, gel (14) can pass from the reservoir (12) into the tube (18) and is retained therein by virtue of the outlet (22) being normally closed. When a push button mechanism (114) is operated, the tube (18) is deformed to a closed condition so as to force the gel (14) therein outwardly through the lower end and consequently through the outlet (22). Thereafter the resilience of the tube (18) re-opens the passage for gel (14) from the reservoir (12) into the neck portion (16).

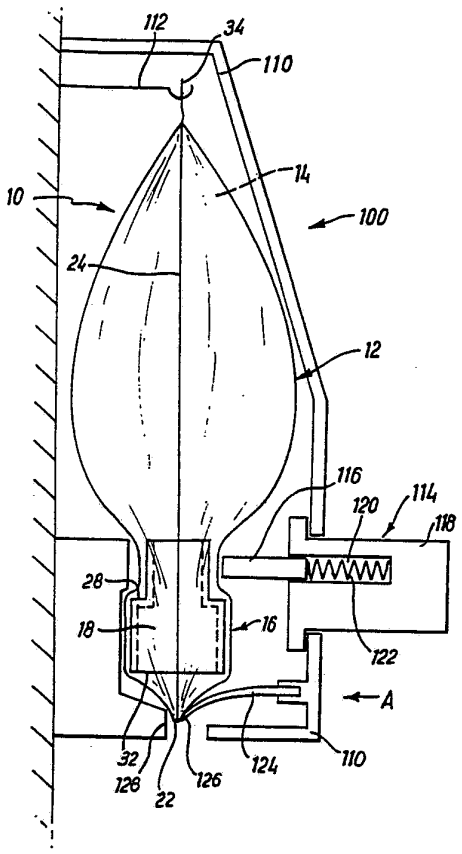

FOR THE PURPOSES OF INFORMATION ONLY

Codes used to identify States party to the PCT on the front pages of pamphlets publishing international applications under the PCT.

AT	Austria
AU	Australia
BB	Barbados
BE	Belgium
BF	Burkina Faso
BG	Bulgaria
BJ	Benin
BR	Brazil
CA	Canada
CF	Central African Republic
CG	Congo
CH	Switzerland
CI	Côte d'Ivoire
CM	Cameroon
CS	Czechoslovakia
CZ	Czech Republic
DE	Germany
DK	Denmark
ES	Spain
FI	Finland
FR	France
GA	Gabon
GB	United Kingdom
GN	Guinea
GR	Greece
HU	Hungary
IE	Ireland
IT	Italy
JP	Japan
KP	Democratic People's Republic of Korea
KR	Republic of Korea
LI	Liechtenstein
LK	Sri Lanka
LU	Luxembourg
MC	Monaco
MG	Madagascar
ML	Mali
MN	Mongolia
MR	Mauritania
MW	Malawi
NL	Netherlands
NO	Norway
NZ	New Zealand
PL	Poland
PT	Portugal
RO	Romania
RU	Russian Federation
SD	Sudan
SE	Sweden
SK	Slovak Republic
SN	Senegal
SU	Soviet Union
TD	Chad
TG	Togo
UA	Ukraine
US	United States of America

Containers and Dispensers for the Contents thereof

This invention relates to containers, and dispensers for using such containers to dispense the contents thereof.

In wash rooms and public lavatories, it is convenient to use soap which can be dispensed from dispensers mounted on the wall. The soap is available as a relatively stiff gel and can be supplied in plastic bags which are hung inside the dispenser with a suitable mechanism such as a lever or a button being used to dispense the gel.

The necks of the containers have to be reinforced so that pressure can be applied to dispense the gel from the outlet. The stiffness of the gels, however, makes them difficult to use because they do not flow very easily and tend to resist movement from the reservoir into the neck of the collar. Also additives in the gels can make it difficult to dispense through conventional dispensers because of wear.

It is an object of the invention to provide a container which obviates and/or mitigates the above mentioned disadvantages.

According to a first aspect of this invention

there is provided a container comprising a reservoir adapted to receive a material to be dispensed, an outlet portion in communication with the reservoir, and conduit means associated with the outlet portion, the conduit means being resiliently deformable between an open position, providing a passage in the outlet portion into which material can pass from the reservoir, to a closed position providing for dispensing of material from the outlet portion of the container.

Preferably, the conduit means comprises a tube disposed with the outlet portion and, desirably, the container comprises retaining means to hold the tube in the outlet portion. The outlet portion may have the form of a neck portion, the retaining means comprising formations provided on the neck portion and engaging with the tube. The formations may include shoulders on an inner region of the neck portion which engage a corresponding shoulder on the tube thereby to prevent the tube from moving into the reservoir. The formations may include stops at an outer region of the neck portion which engage an outer end of the tube.

The conduit means may be formed from an elastic material, preferably rubber.

Alternatively the conduit means may comprise a

sleeve attached to the outlet portion externally thereof. The sleeve may be formed from an elastic material, preferably rubber.

Conveniently, the container is provided with support means to enable the container to be supported in a dispenser. The support means may comprise apertures provided either in the reservoir or on tags attached to the reservoir.

According to a second aspect of the invention, there is provided a dispenser for use with a container as described in any of the six preceding paragraphs, the dispenser comprising holding means for holding the container in an orientation so that material therein can be dispensed, force applying means for applying a force to the outlet portion of the container whereby to deform the conduit means to the closed position and to push material in the outlet portion towards a free end region thereof, and sealing means movable from a sealing position for sealing said free end region to prevent leakage of the material therefrom, to a non-sealing position in which the material in the outlet portion can be dispensed, the sealing means being so formed that when said force is applied to the outlet portion, the

sealing means is moved to the non-sealing position so that material can be dispensed.

Preferably the sealing means is normally biassed towards the sealing position. The biassing means may be in the form of a spring member, preferably a leaf spring.

The holding means may comprise hook members adapted to hook into apertures provided in the container.

The force applying means may comprise a push button mechanism. The push button mechanism may comprise a first member retractable within a second member, and spring means acting between the first member and the second member. With this arrangement, when the push button mechanism is pushed towards the outlet portion, the first member deforms the conduit means to the closed position, and further pushing of the push button mechanism moves the second member over the first member until the second member engages the outlet portion to deform further the conduit means so that material in the neck portion is pushed towards the free end region thereof.

An embodiment of the invention will now be described by way of example only, with reference to the

accompanying drawings, in which:-

Fig. 1 is a schematic plan view of a container according to the invention;

Fig. 2 is a view along the line II-II of Fig. 1; and

Fig. 3 is a view of a container as shown in Fig. 2 which has been installed in a dispenser.

In the drawings, a container generally designated 10 is shown which comprises a reservoir 12 containing a material to be dispensed which, in the embodiment shown, is a soap in the form of a stiff gel 14. The container 10 also comprises a neck portion 16 of reduced width. The container 10 is formed from two sheets of plastics material known in the art which are fused together along a boundary 24 except for an outlet 22 on the outer edge of the neck portion 16.

A tube 18 is disposed within the neck portion 16 and is formed of an elastic material, e.g. rubber. The tube 18 comprises two parts 18a, 18b of different diameters, the smaller diameter part 18a facing the reservoir 12 to define an inwardly facing shoulder. As can be seen from Fig. 1, in the region where the reservoir 12 and the neck portion 16 meet, the boundary 24 has the form of shoulders 26 which are adapted to cooperate with the shoulder 28 on the collar 18 to

prevent the tube 18 from moving into the reservoir 12.

The tube 18 is resiliently deformable between an open position as shown in the drawings and a closed position in which opposite sides of the tube 18 are pressed together. In the open position, the tube 18 defines a conduit 20 for the passage of the gel 14 from the reservoir to the outlet 22.

The boundary 24 has the form of steps 30 at the outer end region of the neck portion 16 adapted to engage an outer end 32 of the tube 18. In this way, the tube is prevented from being forced out of the container via the neck portion 16.

Tags 34 are attached to the top of the container 10. The tags 34 are provided with apertures 36 for receiving hooks in a dispenser as will be explained below.

Fig. 3 shows a container 10 installed in a dispenser 100. The dispenser 100 comprises a housing 110 in which are mounted two hooks 112 on a back plate, only one of which is shown in Fig. 3 for clarity. The hooks 112 pass through the apertures 36 in the tags 34, to suspend the container from the back plate.

The dispenser 100 has a push button mechanism 114 which comprises a first member in the form of a substantially rectangular bar 116 and a second member in the form of a button 118. The button 118 is provided with a recess 120 into which the bar 116 can retract. A spring 122 is also provided in the recess 120 and acts between the bar 116 and the button 118 to urge the bar 116 out of the recess 120 and towards the neck portion 16 of the container 10 as shown. If the push button mechanism 114 is pushed in the direction indicated by the arrow A, then the bar 116 will engage the neck portion 16 of the container 10, and continued pushing will result in the bar 116 pressing the sides of the tube 18 at an upper region thereof against each other, effectively closing the tube 18.

By continuing to push the push button mechanism 114 in the direction indicated by the arrow A, the button 118 will move over the bar 116 until the button 118 engages the neck portion 16. It will be appreciated that the spring 122 is of sufficient strength to enable the bar 116 to push the sides of the tube 18 against each other, but is not so strong that it will prevent the button 118 from being pushed against the neck portion 16. If the push button mechanism 114 is then pushed further in the direction indicated by the arrow A, the sides of the tube 18 at a lower region thereof

will also be pressed together. In view of the fact that upper regions of the sides of the tube 18 have already been pushed together, then pushing the sides of the lower region of the tube together will result in all the gel 14 which is inside the tube 18 being pushed in a downward direction towards the outlet 22 of the container 10.

A leaf spring 124 is mounted on a lower portion of the housing 110. An end 126 of the leaf spring 124 engages the lower region of the neck portion 16 at the outlet 22. The spring 124 urges the lower end region against an abutment 128 of the housing 110. In this way, the leaf spring 124 normally seals the outlet 22 of the neck portion 16 to prevent leakage of the gel 14 out of the opening 22. The leaf spring 124 is formed such that it can prevent leakage of the gel 14, but, when the push button mechanism 114 is depressed to push the gel 14 dowardly towards the opening 22, the force applied by the gel 14 is sufficient to push the spring 124 away from its sealing position to a non-sealing position to open the opening 22 and allow the gel 14 to be dispensed from the container 10.

When the containers are supplied for use, the opening 22 is sealed by a strip of the plastics material from which the container is made. In this respect,

reference is made to Fig. 1 in which the strip of plastics material is shown in phantom and is designated 200. When it is desired to use the container 10, it is installed in a dispenser 100 and the bottom portion 200 of the plastics material is then torn or cut away.

Thus, the embodiment of the container described above has the advantage that problems associated with the stiffness of the gels and their resulting lack of fluidity are obviated. In particular, the use of the tube 18 enables the gel to pass into the neck portion relatively easily.

In an alternative embodiment of the container (not shown), a resilient sleeve is attached externally of the neck portion to surround same. The sleeve is resiliently deformable between an open position, retaining the walls of the neck portion in a spaced relation to allow passage of gel into the neck portion, and a closed position, effectively closing the neck portion to dispense gel therefrom. The external sleeve may be formed from an elastic material, such as rubber.

It is to be appreciated that the use of the dispenser is not restricted to soap. For example, the dispenser can be used for other products such as jam, sauce etc.

Various modifications can be made without departing from the scope of the invention; for example, instead of the tags 34, the apertures 36 could be formed directly through the reservoir 12 and then the plastics material could be sealed to prevent the leakage of the material 14. A pull lever mechanism may be used as an alternative to the push button mechanism.

Claims:-

1. A container comprising a reservoir adapted to receive a material to be dispensed, an outlet portion in communication with the reservoir, and conduit means associated with the outlet portion, the conduit means being resiliently deformable between an open position, providing a passage in the outlet portion into which material can pass from the reservoir, to a closed position providing for dispensing of material from the outlet portion of the container.

2. A container according to Claim 1, wherein conduit means comprises a tube disposed with the outlet portion.

3. A container according to Claim 2, wherein the container comprises retaining means to hold the tube in the outlet portion.

4. A container according to Claim 3, wherein the outlet portion has the form of a neck portion, the retaining means comprising formations provided on the neck portion and engaging with the tube.

5. A container according to Claim 4, wherein the formations include shoulders on an inner region of the

neck portion which engage a corresponding shoulder on the tube thereby to prevent the tube from moving into the reservoir.

6. A container according to Claim 4 or 5, wherein the formations include stops at an outer region of the neck portion which engage an outer end of the tube.

7. A container according to any of the preceding Claims, wherein the conduit means is formed from an elastic material.

8. A container according to Claim 7, wherein the elastic material is rubber.

9. A container according to Claim 1, wherein the conduit means comprises a sleeve attached to the outlet portion externally thereof.

10. A container according to Claim 9, wherein the sleeve is formed from a plastics material.

11. A container according to Claim 10, wherein the plastics material is nitrile rubber.

12. A container according to any of the preceding Claims, which is provided with support means to enable

the container to be supported in a dispenser.

13. A container according to Claim 12, wherein the support means comprises apertures provided in the reservoir.

14. A container according to Claim 12, wherein the support means comprises apertures provided on tags attached to the reservoir.

15. A dispenser for use with a container according to any of the preceding Claims, the dispenser comprising holding means for holding the container in an orientation so that material therein can be dispensed, force applying means for applying a force to the outlet portion of the container whereby to deform the conduit means to the closed position and to push material in the outlet portion towards a free end region thereof, and sealing means movable from a sealing position for sealing said free end region to prevent leakage of the material therefrom, to a non-sealing position in which the material in the outlet portion can be dispensed, the sealing means being so formed that when said force is applied to the outlet portion, the sealing means is moved to the non-sealing position so that material can be dispensed.

16. A dispenser according to Claim 15, wherein the sealing means is normally biassed towards the sealing position.

17. A dispenser according to Claim 16, wherein the biassing means is in the form of a spring member.

18. A dispenser according to Claim 17, wherein the spring member is a leaf spring.

19. A dispenser according to any of Claims 15 to 18, wherein the holding means comprises hook members adapted to hook into apertures provided in the container.

20. A dispenser according to any of the preceding Claims, wherein the force applying means comprises a push button mechanism.

21. A dispenser according to Claim 20, wherein the push button mechanism comprises a first member retractable within a second member, and spring means acting between the first member and the second member.

22. A dispenser according to Claim 21, wherein, when the push button mechanism is pushed towards the outlet portion, the first member deforms the conduit means to the closed position, and further pushing of the push

button mechanism moves the second member over the first member until the second member engages the outlet portion to deform further the conduit means so that material in the neck portion is pushed towards the free end region thereof.

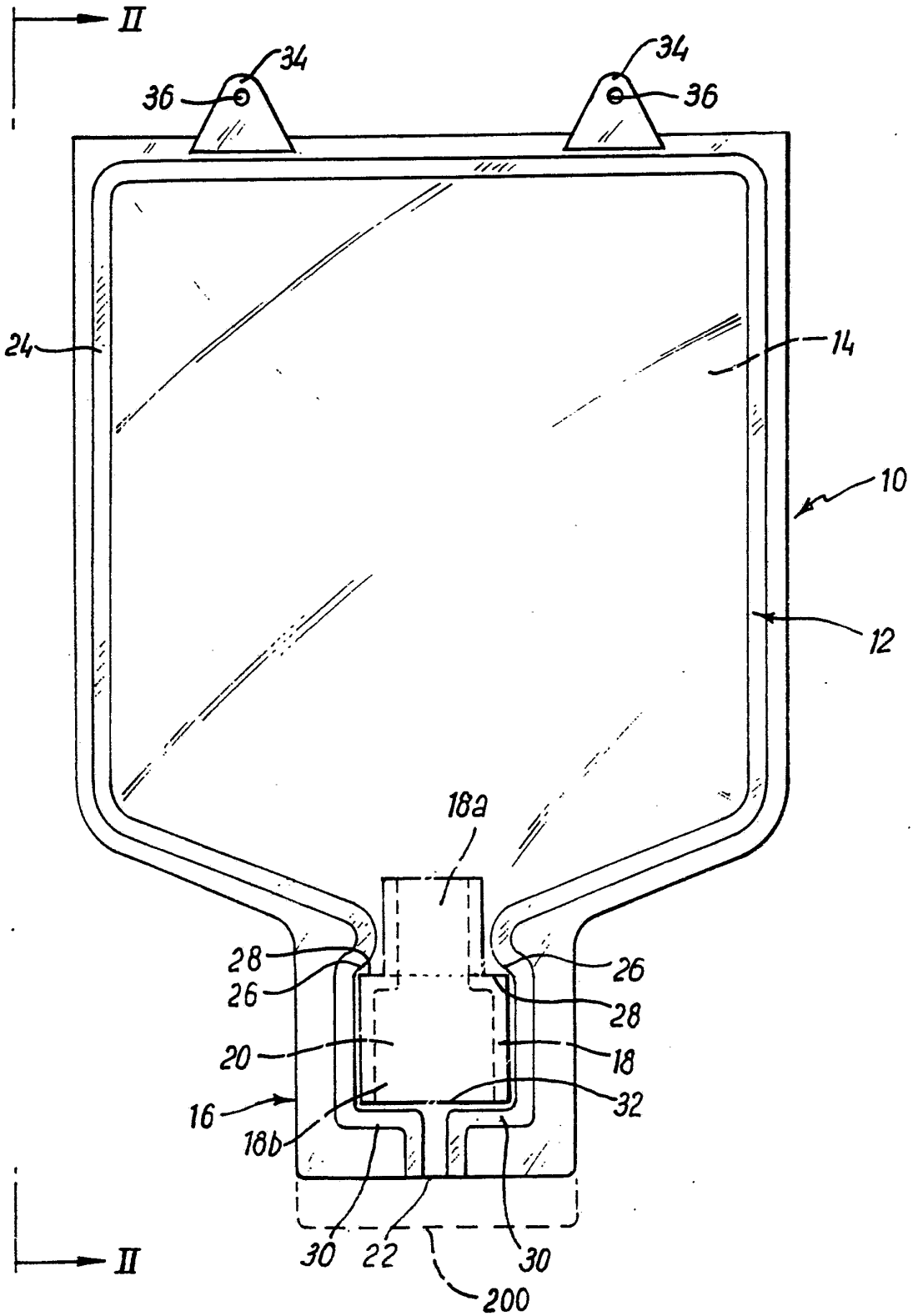
II
34
36
34
36
24
14
10
12
18a
28
26
26
28
20
18
16
32
18b
30
22
30
200
II

FIG.1

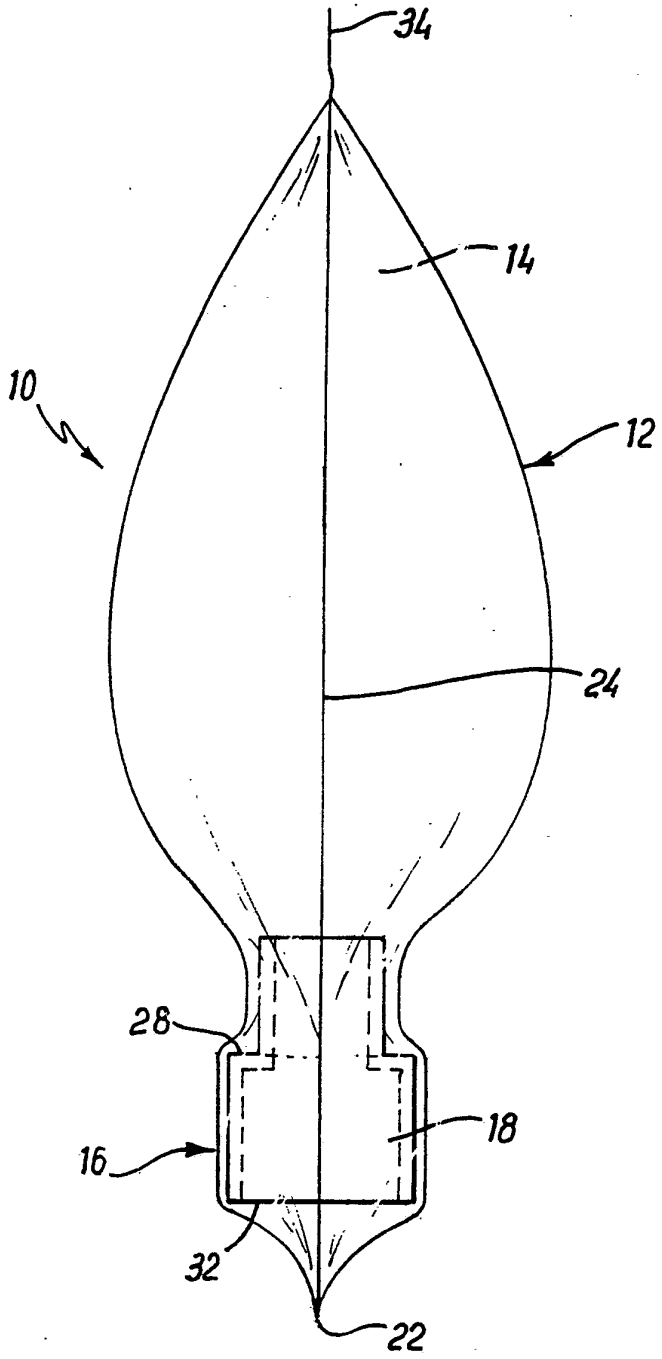

FIG.2

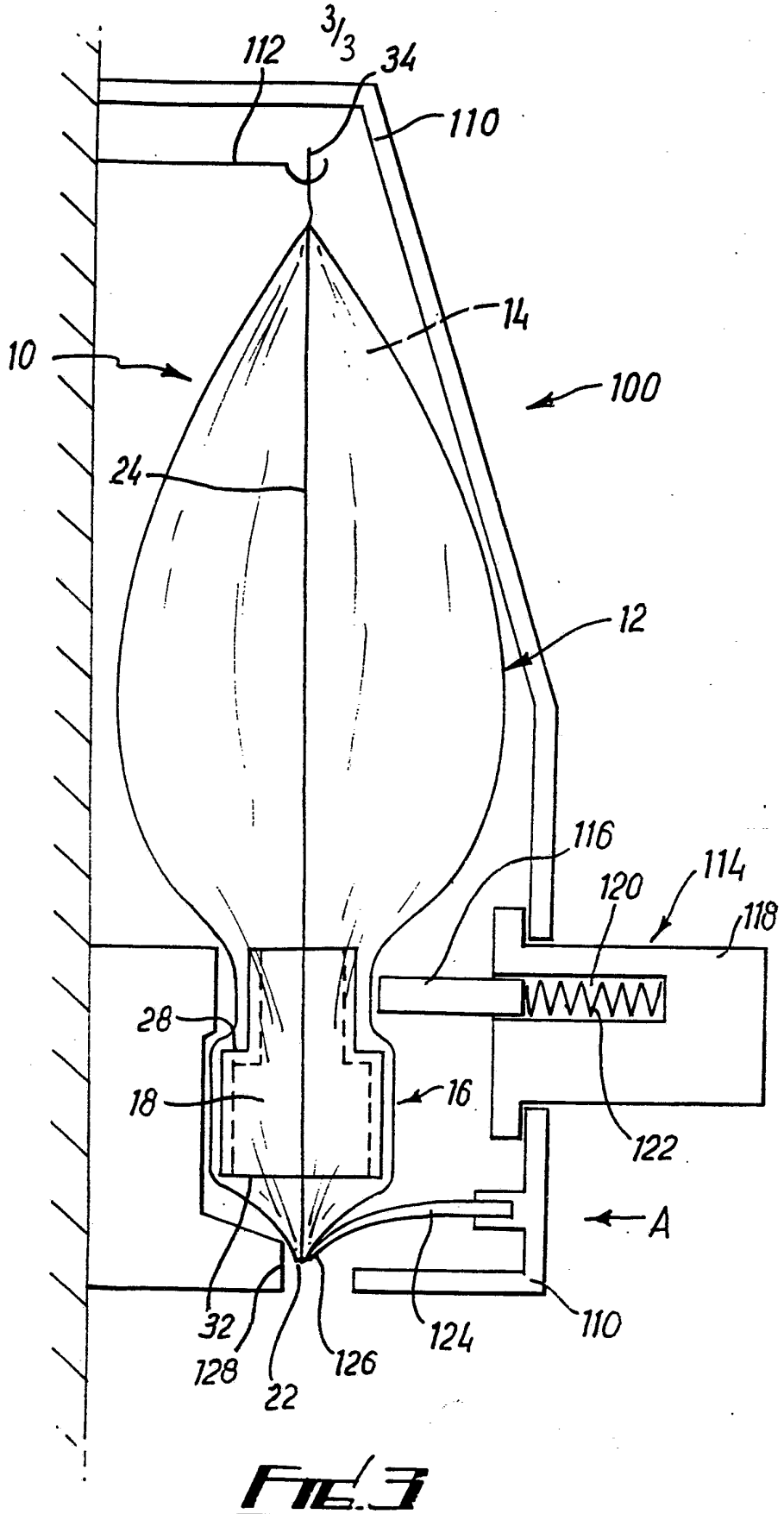
112
34
110
14
10
100
24
12
116
114
120
118
28
18
16
122
A
32
128
22
126
124
110

FIG. 3

INTERNATIONAL SEARCH REPORT

International Application No PCT/GB 92/00104

I. CLASSIFICATION OF SUBJECT MATTER (if several classification symbols apply, indicate all)[6]

According to International Patent Classification (IPC) or to both National Classification and IPC

Int.Cl. 5 A47K5/12

II. FIELDS SEARCHED

Minimum Documentation Searched[7]

Classification System	Classification Symbols
Int.Cl. 5	A47K ; B65D

Documentation Searched other than Minimum Documentation to the Extent that such Documents are Included in the Fields Searched[8]

III. DOCUMENTS CONSIDERED TO BE RELEVANT[9]

Category °	Citation of Document,[11] with indication, where appropriate, of the relevant passages[12]	Relevant to Claim No.[13]
X	EP,A,0 314 233 (UNILEVER NV / PLC) 3 May 1989	1-4,7,9, 12,15-17
Y	see column 2, line 35 - column 3, line 45; figures 1-5	10,18
A		21,22
X	EP,A,0 433 905 (BASOTHERM GMBH) 26 June 1991	1-4,7,8, 12,13, 15,16,19
Y	see column 3, line 35 - column 5, line 33; figures 1-7	10,14
Y	GB,A,2 197 843 (ATP PACKAGING LTD) 2 June 1988 see page 5, line 27 - page 6, line 9; figure 3	14
Y	DE,A,3 417 312 (WILBERT) 14 November 1985 see page 15, line 12 - line 17 see page 17, line 15 - line 19; figures 1-3	18

-/--

° Special categories of cited documents :[10]

"A" document defining the general state of the art which is not considered to be of particular relevance

"E" earlier document but published on or after the international filing date

"L" document which may throw doubts on priority claim(s) or which is cited to establish the publication date of another citation or other special reason (as specified)

"O" document referring to an oral disclosure, use, exhibition or other means

"P" document published prior to the international filing date but later than the priority date claimed

"T" later document published after the international filing date or priority date and not in conflict with the application but cited to understand the principle or theory underlying the invention

"X" document of particular relevance; the claimed invention cannot be considered novel or cannot be considered to involve an inventive step

"Y" document of particular relevance; the claimed invention cannot be considered to involve an inventive step when the document is combined with one or more other such documents, such combination being obvious to a person skilled in the art.

"&" document member of the same patent family

IV. CERTIFICATION

Date of the Actual Completion of the International Search	Date of Mailing of this International Search Report
13 MAY 1992	23. 06. 92
International Searching Authority	**Signature of Authorized Officer**
EUROPEAN PATENT OFFICE	FORDHAM A.

III. DOCUMENTS CONSIDERED TO BE RELEVANT (CONTINUED FROM THE SECOND SHEET)

Category °	Citation of Document, with indication, where appropriate, of the relevant passages	Relevant to Claim No.
A	WO,A,9 008 497 (FELDMUHLE AKTIENGESELLSCHAFT) 9 August 1990 see page 23, paragraph 1; claim 2; figure 1 ---	11

ANNEX TO THE INTERNATIONAL SEARCH REPORT ON INTERNATIONAL PATENT APPLICATION NO. GB 9200104 SA 55564

This annex lists the patent family members relating to the patent documents cited in the above-mentioned international search report. The members are as contained in the European Patent Office EDP file on 13/05/92
The European Patent Office is in no way liable for these particulars which are merely given for the purpose of information.

Patent document cited in search report	Publication date	Patent family member(s)	Publication date
EP-A-0314233	03-05-89	None	
EP-A-0433905	26-06-91	None	
GB-A-2197843	02-06-88	None	
DE-A-3417312	14-11-85	None	
WO-A-9008497	09-08-90	DE-A- 3902476 EP-A- 0455679	02-08-90 13-11-91