Oct. 12, 1948. G. W. MORK 2,450,905

BULLDOZER ATTACHMENT FOR JEEPS

Filed Oct. 11, 1945 2 Sheets-Sheet 1

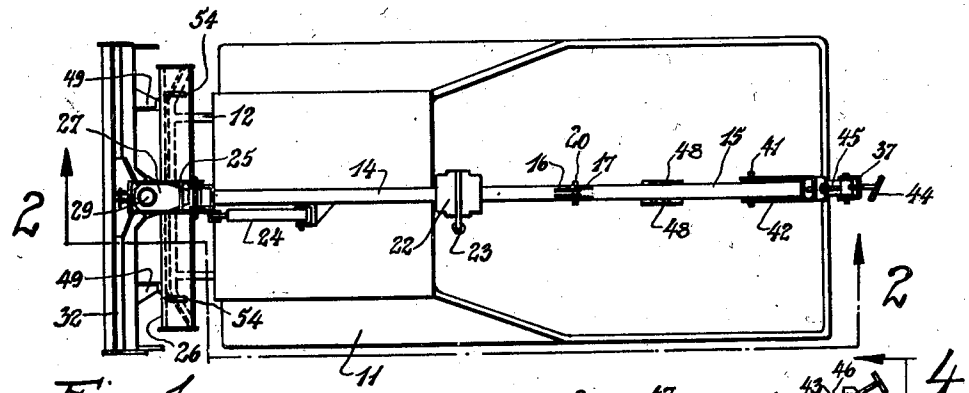

Fig. 1.

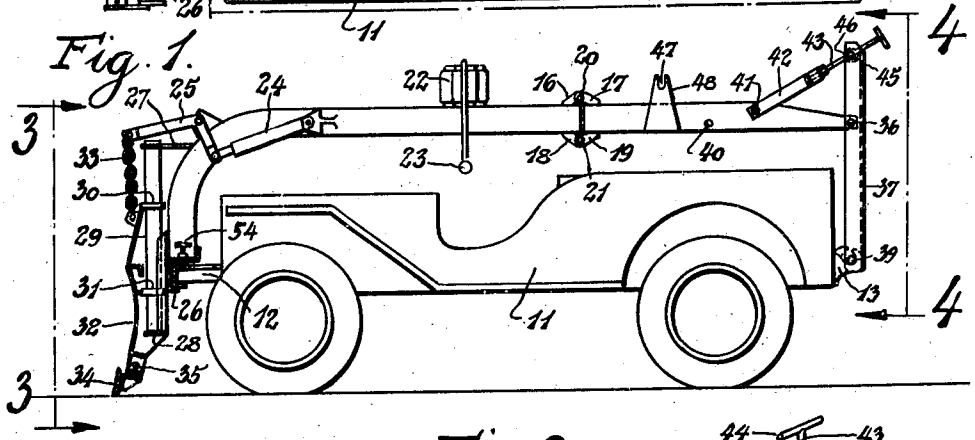

Fig. 2.

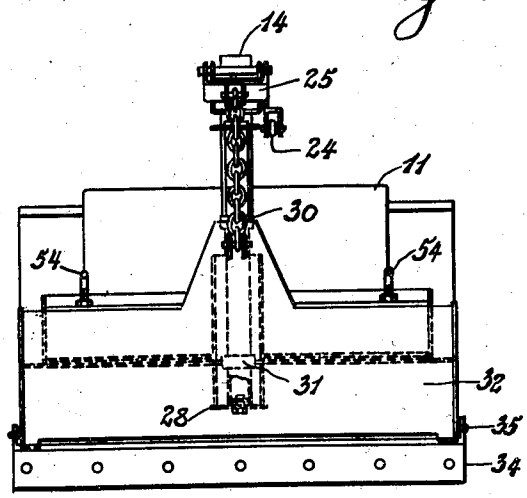

Fig. 3.

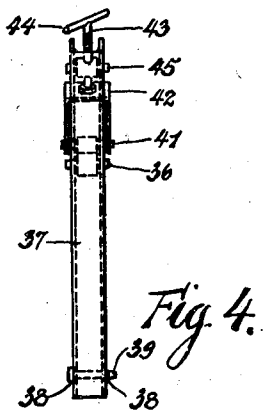

Fig. 4.

George W. Mork,
INVENTOR,

BY Roger Sherman Hoar
ATTORNEY.

Oct. 12, 1948. G. W. MORK 2,450,905

BULLDOZER ATTACHMENT FOR JEEPS

Filed Oct. 11, 1945 2 Sheets-Sheet 2

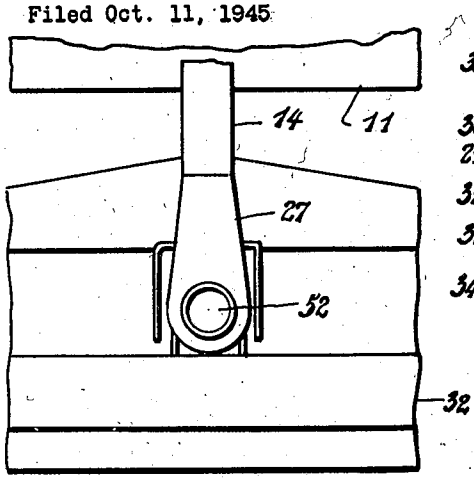

Fig. 7

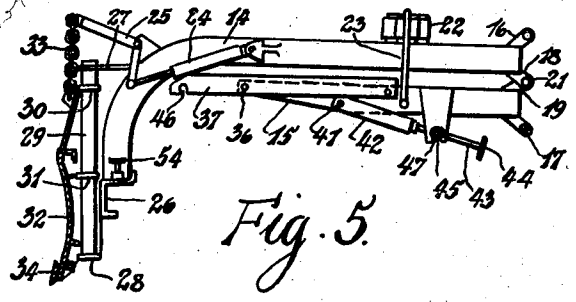

Fig. 5.

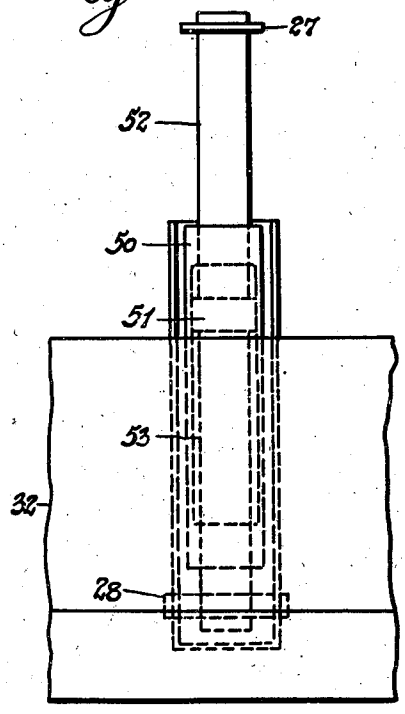

Fig. 8.

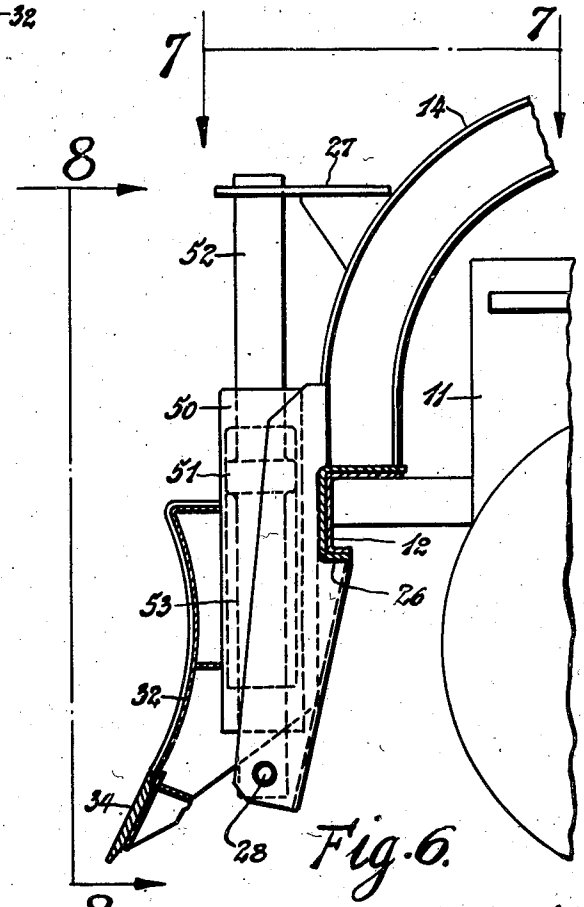

Fig. 6.

George W. Mork,
INVENTOR,
BY Ryon Sherman Hoar
ATTORNEY.

Patented Oct. 12, 1948 2,450,905

UNITED STATES PATENT OFFICE

2,450,905

BULLDOZER ATTACHMENT FOR JEEPS

George W. Mork, South Milwaukee, Wis., assignor to Bucyrus-Erie Company, South Milwaukee, Wis., a corporation of Delaware

Application October 11, 1945, Serial No. 621,703

19 Claims. (Cl. 37—144)

1

My invention relates to new and useful improvements in bulldozer attachments for jeeps and other similar wheeled vehicles.

The jeeps developed during World War II are sturdy vehicles with considerable tractive power. During the war, bulldozers have been found to be as important as artillery.

Bulldozers had already established themselves in the peacetime economy before the war; and jeeps are now in great demand for civilian post-war use.

Accordingly it is the principal object of my invention to design a readily mountable and demountable bulldozer-attachment for jeeps, so as to produce an efficient bulldozer for light work.

A further object of my invention is to design a self-contained bulldozer-attachment, which requires no addition of any special cooperative fittings to the jeep.

A still further object is to design a bulldozer, the blade of which slides up and down, as contrasted with the conventional mounting of the blade on two pivoted push-arms.

In addition to my principal objects, above stated, I have worked out a number of novel and useful details, which will be readily evident as the description progresses.

My invention consists in the novel parts and in the combination and arrangement thereof, which are defined in the appended claims, and of which one embodiment is exemplified in the accompanying drawings, which are hereinafter particularly described and explained.

Throughout the description the same reference number is applied to the same member or to similar members.

Figure 1 is a plan view of a jeep with my attachment attached.

Figure 2 is a side elevation of the same, partly in section, taken along the lines 2—2 of Figure 1.

Figure 3 is a slightly enlarged front elevation of the same, taken along the lines 3—3 of Figure 2.

Figure 4 is a slightly enlarged rear elevation of the locking device of my attachment, taken along the lines 4—4 of Figure 2.

Figure 5 is a side elevation of my attachment, folded up for shipment.

Figure 6 is a considerably enlarged side elevation of a second variant of my elevating mechanism, with the blade in section.

Figure 7 is a plan view of this elevating mechanism, with part of the blade and jeep showing, all taken along the lines 7—7 of Figure 6.

Figure 8 is a front elevation of this elevating

2

mechanism, with part of the blade showing, all taken along the lines 8—8 of Figure 6.

Referring now more particularly to Figures 1, 2 and 3, we see that 11 is a conventional jeep, or other vehicle, having a front bumper 12, and a rear traction coupling 13.

The frame of my bulldozer-attachment comprises a beam of two parts, 14 and 15. These two parts are secured together by ears 16, 17, 18, 19; and pins 20, 21.

On beam-part 14, there is mounted a conventional hand-pump 22, such that oscillation of pump-handle 23 builds up fluid pressure, and extreme positioning of this handle in one direction opens a valve in the pump to release this pressure.

This pump 22 communicates by a pipe, which for the sake of simplicity I have omitted to show, with cylinder-piston 24, pivoted on beam-part 14, which cylinder-piston actuates bell-crank 25; also pivoted on beam-part 14.

The downwardly curved forward portion of beam-part 14 carries a transverse horizontal channel 26, open to the rear, for engaging the bumper 12 of the jeep or other vehicle. This channel must fit loosely enough over the bumper, so as to be readily mountable thereon, and removeably therefrom. Accordingly I provide the channel 26 with hand-screws 54, to secure it against vertical movement with respect to the bumper 12.

Supported by brackets 27 and 28 on the front of beam-part 14, there is a vertical column 29, on which slide two horizontal rings 30 and 31. These rings carry the bulldozer-blade 32.

A chain 33 connects the bell-crank 25 with the blade 32, for lifting the latter.

The lower portion 34 of the blade 32 may be hinged, as at 35, so that it will tip up out of the way when meeting an obstruction during backing.

Pivoted on the rear end of rear beam-part 15, as at 36, is a channel 37. This channel has, at its lower end, holes 38 for the insertion of a pin 39 to engage the rear traction coupling 13 of the jeep or other vehicle.

On rear beam-part 15 there is a hole 40, the object of which will be stated later herein. Also, pivoted to beam-part 15, as at 41, there is the female member 42 of an expansible coupling. The male member 43 has a handle 44 with which to screw it in or out. This male member also carries rotatable but not slidable sidewardly-projecting pins 45, to engage the hooked portion 46 of channel 37; or, selectively, the notches 47 of the two brackets 48 on beam-part 15.

Braces 48 project rearwardly from blade 32. The rear portion of each of these two braces is sufficiently high so that it bears against the front face of channel 26 in all positions of the blade.

When dismounted, expansible coupling 42—43 is loosened, pin 39 is removed, and channel 37 is folded under beam-part 15, and is secured to it by reinserting pin 39 through holes 38, 40 and 38. See Figure 5. The expansible coupling is secured by inserting pins 45 in notches 47 of brackets 48, and then tightening the coupling. Pin 20 is then removed, and rear beam-part 15 and its associated mechanisms is folded under front beam-part 14, by rotation about pin 2. The blade 32 had best be in its raised position, as shown in Figure 5.

Turning now to Figures 6, 7 and 8, we see the second variant of my invention, which differs from my first variant merely by having a cylinder 50 to carry the blade 32. Within this cylinder there is a piston 51, with two piston rods 52 and 53, which take the place of the column 29 of the first variant.

This cylinder-piston assembly may be actuated by any appropriate fluid pressure means (not shown). The advantage of my second variant over my first, is that my second permits down-pressure on the blade.

Having now described and illustrated two forms of my invention, I wish it to be understood that my invention is not to be limited to the specific forms or arrangements of parts herein described and shown.

I claim:

1. In an attachment, for use on a vehicle which has a front bumper and a rear traction coupling, the combination of: a beam to extend from front to rear of the vehicle above the vehicle, said beam having a downwardly projecting portion at each end; a rearwardly opening transverse horizontal channel, carried by the front downwardly projecting portion of the beam, to engage the front bumper of the vehicle; means to lock the rear downwardly projecting portion of the beam to the rear traction coupling of the vehicle; a bulldozer blade, carried by said front downwardly projecting portion, and vertically slidable with respect thereto; and means carried by the beam to raise and lower said blade.

2. In an attachment, for use on a vehicle which has a front bumper and a rear traction coupling, the combination of: a beam to extend from front to rear of the vehicle, said beam having a substantially vertical portion at its front end; means carried by the substantially vertical portion of the beam, to engage the front bumper of the vehicle; means to lock the beam to the rear of the vehicle; a material-handling instrumentality, carried by the substantially vertical portion, and vertically slidable with respect thereto; and means to raise and lower said instrumentality.

3. An attachment according to claim 2, further characterized by the fact that the bumper-engaging means is a rearwardly opening transverse channel, and that there are means to secure this channel against vertical movement with respect to the front bumper of the vehicle.

4. An attachment according to claim 2, further characterized by having, rearwardly projecting from the instrumentality, two braces, which slidably engage the bumper-engaging means at all heights of the instrumentality.

5. An attachment according to claim 2, further characterized by the fact that the beam carries a vertical column, and the instrumentality carries guide means slidable on said column.

6. An attachment according to claim 2, further characterized by the fact that the raising and lowering means comprises a fluid-pressure cylinder-piston assembly.

7. An attachment according to claim 2, further characterized by the fact that the raising and lowering means comprises a fluid-pressure cylinder-piston assembly carried by the beam, and a hand pump carried by the beam, and capable of pumping pressure into the assembly to raise the instrumentality, and of releasing said pressure to enable the instrumentality to lower under the influence of gravity.

8. An attachment according to claim 2, further characterized by the fact that the raising and lowering means comprises a fluid-pressure cylinder-piston assembly carried by the beam, and a hand pump carried by the beam, and capable of pumping pressure into the assembly to raise the instrumentality, and of releasing said pressure to enable the instrumentality to lower under the influence of gravity, and a bell-crank pivoted on the beam and connected by the assembly to be rocked thereby, and tension means connecting the bell-crank and the instrumentality.

9. An attachment according to claim 2, further characterized by the fact that the raising and lowering means comprises a vertical cylinder carried by the instrumentality, and a piston therein, and two piston-rods to the piston, both rods being connected to the beam.

10. An attachment according to claim 2, further characterized by the fact that the beam is hinged in the middle.

11. An attachment according to claim 2, further characterized by the fact that the beam has a rear downwardly projecting portion, pivoted to the beam, and has extensible means extending between it and the horizontal portion of the beam.

12. An attachment according to claim 2, further characterized by the fact that the beam has a rear downwardly projecting portion, pivoted to the beam, and has extensible means extending between it and the horizontal portion of the beam, and by the fact that the beam is hinged in the middle.

13. In an attachment, for use on a vehicle, the combination of: a beam to extend from front to rear of the vehicle above the vehicle, said beam having a substantially vertical portion at its forward end; means for securing this beam to the vehicle, said means comprising means removably engaging one end of the vehicle and means releasably clampable to the other end of the vehicle; a material-handling instrumentality, carried by said substantially vertical portion, and vertically slidable with respect thereto; and means to raise and lower said instrumentality.

14. In an attachment, for use on a vehicle, the combination of: a beam to extend from front to rear of the vehicle above the vehicle, said beam having a substantially vertical portion at its forward end; means for securing this beam to the vehicle; a material-handling instrumentality, carried by said substantially vertical portion, and vertically slidable with respect thereto; means to raise and lower said instrumentality; and, rearwardly projecting from the instrumentality, two braces, which slidingly engage means carried by the beam at all heights of the instrumentality.

15. An attachment according to claim 13, further characterized by the fact that the beam

carries a vertical column, and the instrumentality carries guide means slidable on said column.

16. An attachment according to claim 13, further characterized by the fact that the raising and lowering means comprises a fluid-pressure cylinder-piston assembly.

17. An attachment according to claim 13, further characterized by the fact that the raising and lowering means comprises a fluid-pressure cylinder-piston assembly carried by the beam, and a hand pump carried by the beam, and capable of pumping pressure into the assembly to raise the instrumentality, and of releasing said pressure to enable the instrumentality to lower under the influence of gravity.

18. An attachment according to claim 13, further characterized by the fact that the raising and lowering means comprises a fluid-pressure cylinder-piston assembly carried by the beam, and a hand pump carried by the beam, and capable of pumping pressure into the assembly to raise the instrumentality, and of releasing said pressure to enable the instrumentality to lower under the influence of gravity, and a bell-crank pivoted on the beam and connected by the assembly to be rocked thereby, and tension means

connecting the bell-crank and the instrumentality.

19. In an attachment, for use on a vehicle, the combination of: a beam to extend from front to rear of the vehicle above the vehicle, said beam having a substantially vertical portion at its forward end; means for securing this beam to the vehicle; a material-handling instrumentality, carried by said substantially vertical portion, and vertically slidable with respect thereto; and means to raise and lower said instrumentality, said means comprising a vertical cylinder carried by the instrumentality, and a piston therein, and two piston-rods to the piston, both rods being connected to the beam.

GEORGE W. MORK.

REFERENCES CITED

The following references are of record in the file of this patent:

UNITED STATES PATENTS

Number	Name	Date
1,403,969	Linek	Jan. 17, 1922
1,788,698	Wooldridge	Jan. 13, 1931
2,044,044	Anthony	June 16, 1936