April 11, 1950 S. J. JOHNSON 2,503,273

WOOD ELEMENT HYGROSTAT

Filed May 22, 1946

Fig. 2.

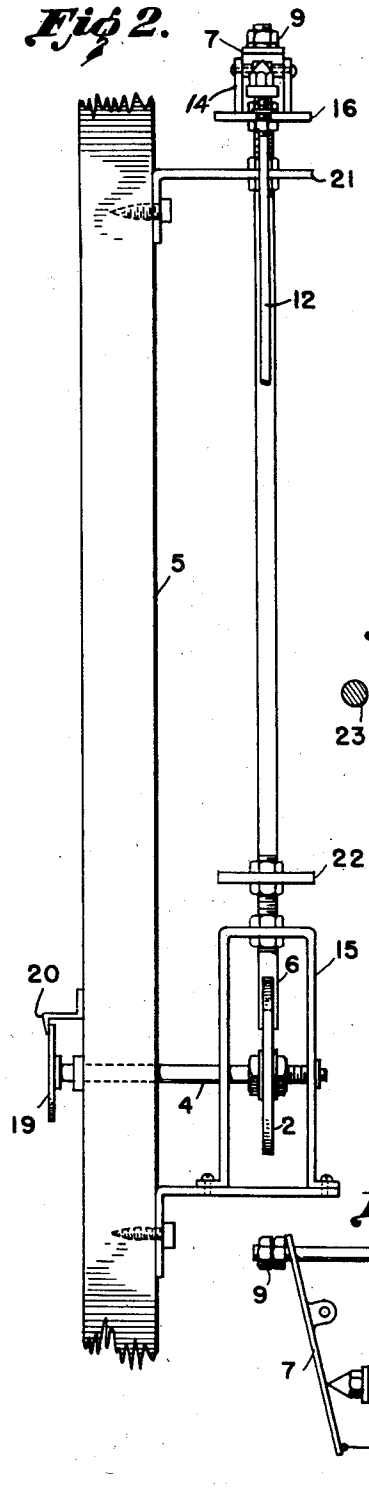

Fig. 1.

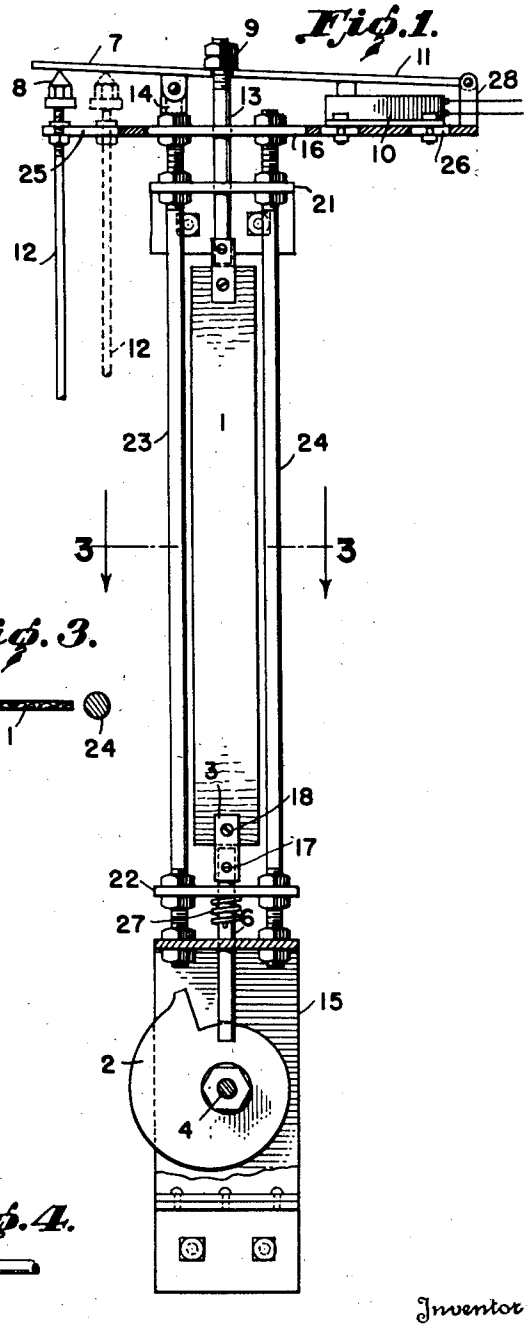

Fig. 3.

Fig. 4.

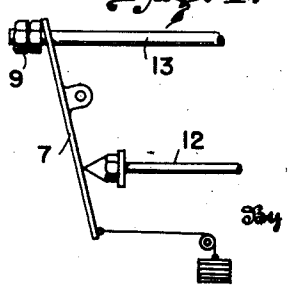

Inventor

S. J. JOHNSON

H. R. Foss

L. M. Mantles

Attorney

Patented Apr. 11, 1950

2,503,273

UNITED STATES PATENT OFFICE

2,503,273

WOOD ELEMENT HYGROSTAT

Seymour J. Johnson, Madison, Wis., dedicated to the free use of the People in the territory of the United States

Application May 22, 1946, Serial No. 671,482

2 Claims. (Cl. 297—1)

(Granted under the act of March 3, 1883, as amended April 30, 1928; 370 O. G. 757)

1

This application is made under the act of March 3, 1883, as amended by the act of April 30, 1928, and the invention herein described, if patented, may be manufactured and used by or for the Government of the United States of America for governmental purposes without the payment to me of any royalty thereon.

I hereby dedicate the invention herein described to the free use of the people in the territory of the United States to take effect on the granting of a patent to me.

My invention relates to improvements in construction of a humidity controller called a hygrostat in which the shrinkage and swelling of a wood element is used as a means of controlling the relative humidity in drying or conditioning chambers.

Humidity control is accomplished in conventional manner by the automatic opening and closing of valves on steam or water spray lines, or of dampers in the vent ducts. The valves and dampers are operated by compressed air, or electrically, or by other means. In the air system, the action of the wood element opens or closes an air leakage port or nozzle and thus operates an air valve which is connected to an air-operated diaphragm valve on a steam or water spray line, or which is connected to the dampers in the vent ducts. In the electric current system, the action of the wood element operates a microswitch, or makes or breaks contact points and thus operates an electric motor, or motor valve, that is connected to either steam or water line, or to the vent duct dampers.

Accurate control of conditions has been obtained with my hygrostat, and for steady conditions, the control is reliable and requires practically no attention, except during the first few hours when constant adjustment is required while the wood is changing to the required equilibrium moisture content.

The common method of control is by wet and dry bulb temperature-control instruments. In this system, accuracy of humidity control depends on continuous maintenance of both wet and dry bulb temperatures at the desired setting. Accurate control may be lost if the water supply or air circulation fails, the wet bulb wick becomes dirty, or the dry bulb temperature is accidentally raised beyond the compensating power of normal heat losses of the drying or conditioning chamber.

Rigid hygroscopic substances, such as wood, which shrink or swell with changes in moisture content have been used to control relative humidity. The degree to which control is gained by a hygrostat containing such a substance as the sensitive element is dependent upon the relationship between temperature of the air, relative humidity, and the equilibrium moisture content of the element. The wood element hygrostats which have been employed have lacked sensitivity, have not been capable of easy adjustment or calibration from either inside or outside of the conditioned chamber, or have exposed electrical contacts subject to corrosion inside the conditioned chamber. The wood elements in these hygrostats have not been capable of easy replacement, have been subject to breakage during adjustment, shutdown, or failure, or have been subject to stresses which cause distortion and subsequent maladjustment.

2

The objects of my improvement are to provide, first, a free acting arrangement of the wood element that permits easy calibration, adjustment, and replacement, and also operation without restraint and breakage; and second, a cam-type mechanism that operates without lost motion and permits smooth and accurate adjustments and calibration for desired humidity conditions over a wide range.

I attain these objects by mechanism illustrated in the accompanying drawing, in which Figure 1 is a face view showing the end grain surface of the wood section and the spiral pattern of the adjusting cam; Figure 2 is a side view showing principally the mounting arrangement; Figure 3 is a view in section at line 3—3; and Figure 4 is a view of the air nozzle operating means employed when the hygrostat is placed horizontally.

The straight, end-grain wood section 1 is supported freely on the edge of the spiral-shaped metal cam disc 2 by means of a grooved rod 6 which is connected to the wood element 1 through the coupling sleeve 3. Adjustments to obtain desired humidities are obtained from outside of the drying or conditioning room by rotating cam 2. The latter is mounted upon adjusting rod 4, which is supported by frame 15 and which extends through the wall 5 of the drying or conditioning chamber. The adjusting rod 4 is provided with a hand wheel 19 which may be calibrated and graduated in equilbrium moisture content or otherwise. The device 20 may serve as a pointer and as a lock as well. Top plate 16 supports nozzle 8, and also the pivot mounting 14 for lever 7. Plate 16 and guide plates 21 and 22 are supported on rods 23 and 24. Rods 6 and 13 move in holes in members 15, 16, 21 and 22. Extensions on members 15 and 21 serve as

brackets for convenient wall mounting. The coupling sleeves 3 are attached by pins 17 and tightening bolts 18, so that the wood element 1 can be removed or installed quickly and easily. As the wood element 1 changes in length by changes in air conditions, it raises or lowers lever arm 7 on air nozzle 8 with practically no restraint, by means of the projecting nut 9 on the connecting rod 13. This action on air nozzle 8 through air line 12 operates a diaphragm valve on a spray line or a diaphragm-operated lever connected to the vent duct dampers.

The mounting for pivot 14 is adjustable, that is, it may be raised or lowered. Mounting of nozzle 8 may likewise be adjustable, as indicated by dotted lines. Nozzle 8 is adjustably positioned in slot 25.

Lever 11, pivoted at 28, is also raised or lowered by movement of 1, and operates an electric microswitch 10 (or contact points) as a means of starting and stopping a control motor on either the spray line or vent system. The position of switch 10 is adjustable in slots 26. Lever 11 is moved upwardly by conventional spring means in the switch.

The invention contemplates the use of auxiliary fittings such as a counterweight attached to the supporting rod 6 above guide plate 22 or a small spring 27 inserted between guide plate 22 and a pin installed in rod 6 below guide plate 22 to assist in maintaining contact of rod 6 with cam 2 when switch 10 is used. In applications where an electrical current system must be operated at a high humidity, rod 13 may be extended through a hole in the roof of the chamber so that the microswitch 10 or contact points may be located outside of the chamber.

The invention contemplates the simultaneous use of one or more operating elements, such as nozzle 8 and switch 10, in one instrument, and in any desired combination of air and electric operation.

Although in the preferred embodiment of the invention the hygrostat is mounted vertically, it can be mounted horizontally or in any other relative position if the auxiliary spring between guide plate 22 and the pin in rod 6 is used. For horizontal mounting with air operation the hygrostat is placed so that lever 7 extends downwardly and is not quite vertical when in a position closing nozzle 8. This is shown in Figure 4. A small counterweight may be attached to lever 7. For horizontal mountings with electrical operation no modification other than the auxiliary spring is needed.

A straight end-grain wood section signifies that the saw cut is approximately perpendicular to the axis of the tree, and that the principal wood cells lie with their axes approximately perpendicular to the planes of sawing. The wood elements I have used consist of transverse sections, about $\frac{5}{32}$-inch thick, cut from 1- by 10-inch flat sawed boards.

Having thus described my invention, I claim:

1. A hygrostat comprising a frame and a device that expands and contracts in response to changes in humidity, said device comprising a vertical elongated straight end-grain wood section subject to no compressive force and no compressive restraint longitudinal to the length of the wood section, support means rigidly attached adjacent the lower end of the wood section and

constrained to upward and downward movement by guide means mounted upon the frame, means providing a vertically adjustable surface upon which the support means rests, second support means comprising a rod fixedly attached adjacent the upper end of the wood and constrained to upward and downward movement by second guide means mounted upon the frame, a pivoted element an arm of which is moved downwardly by the second support means upon contraction of the wood section, the rod carrying an abutment in contact with the upper side of the arm to move it downwardly as aforesaid and which arm is released by the abutment and is free to move upwardly upon upward expansion of the wood section, the upward movement of the arm being under application of a force other than that of the expanding wood section, the pivoted element offering no restraint to expansion of the wood section, the pivoted element being an actuating means for a humidity control device.

2. A hygrostat comprising a frame and a device that expands and contracts in response to changes in humidity, said device comprising an elongated straight end-grain wood section subject to no compressive force, and no compressive restraint longitudinal to the length of the wood section, support means rigidly attached adjacent to one end of the wood section and constrained by guide means mounted upon the frame to movement longitudinal to the length of the wood section, means providing a longitudinally adjustable surface against which the support means abuts, means bearing upon the guide means and the support means to hold the support means against the said longitudinally adjustable surface, a rod rigidly attached to the other end of the wood section, guide means mounted upon the frame to constrain the movement of the said other end of the wood section to movement in the same longitudinal direction as the first mentioned lontiudinal movement, a pivoted element an arm of which is pulled toward said wood section upon contraction of the wood section, the rod carrying an abutment in contact with the outer face of the arm and which arm is released and is free to move in the direction away from said wood section upon expansion of the wood section, the pivoted element offering no restraint to expansion of the wood section, the said movement away being under application of a force other than that of the expanding wood section, the pivoted element being an actuating means for a pneumatic humidity control device.

SEYMOUR J. JOHNSON.

REFERENCES CITED

The following references are of record in the file of this patent:

UNITED STATES PATENTS

Number	Name	Date
1,151,814	Norwood et al.	Aug. 31, 1915
1,807,306	Colman	May 26, 1931
1,902,173	Larson	Mar. 21, 1933
1,950,240	Hilgenberg	Mar. 6, 1934
2,235,721	Morgan	Mar. 18, 1941
2,255,639	Annin	Sept. 9, 1941
2,262,342	Shaw	Nov. 11, 1941
2,268,442	Crawford	Dec. 30, 1941