Feb. 17, 1925. 1,526,553

L. KIRSCHBRAUN ET AL

PAPER MAKING

Filed Dec. 15, 1921

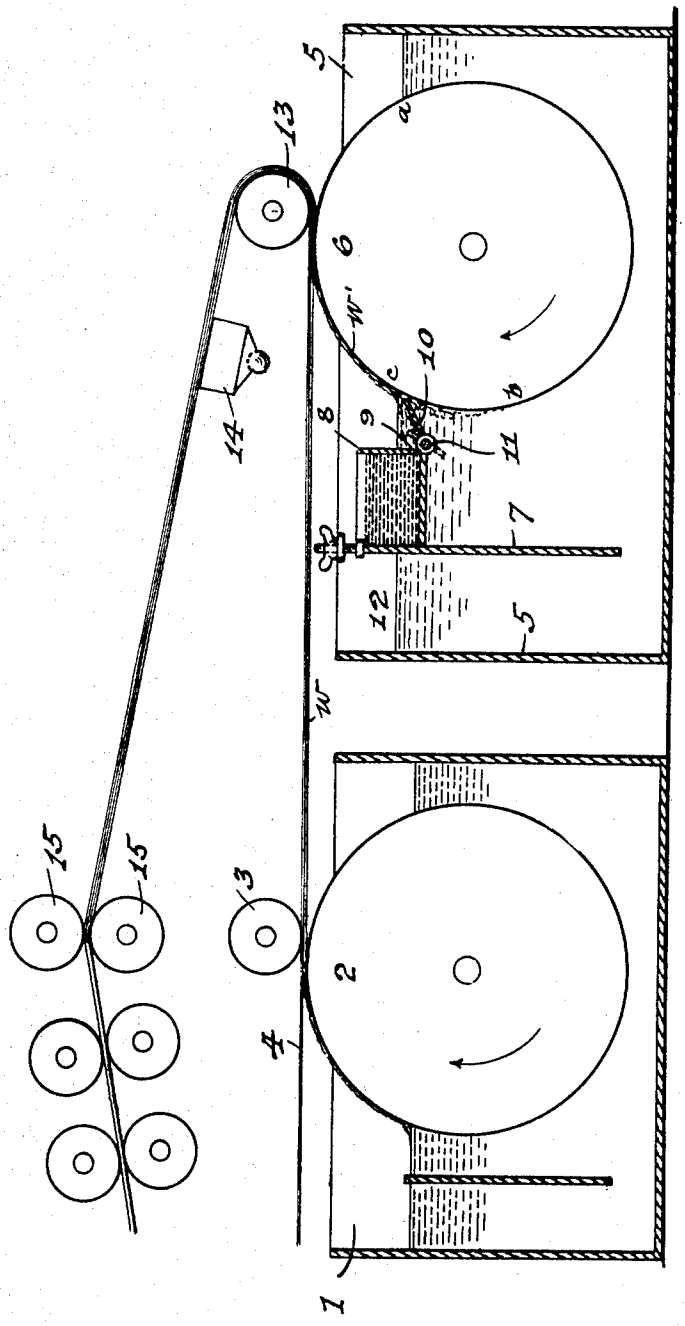

Witness,
S. B. Mann

Inventors,
Lester Kirschbraun.
Thomas V. Morse.
By Frank L. Belknap Atty.

Patented Feb. 17, 1925. 1,526,553

UNITED STATES PATENT OFFICE.

LESTER KIRSCHBRAUN, OF CHICAGO, ILLINOIS, AND THOMAS W. MORSE, OF RIDGEFIELD PARK, NEW JERSEY; SAID MORSE ASSIGNOR TO FLINTKOTE COMPANY, A CORPORATION OF MASSACHUSETTS.

PAPER MAKING.

Application filed December 15, 1921. Serial No. 522,691.

To all whom it may concern:

Be it known that we, LESTER KIRSCHBRAUN and THOMAS W. MORSE, both citizens of the United States, and residing, respectively, in the city of Chicago, county of Cook, and State of Illinois, and in the town of Ridgefield Park, county of Bergen, and State of New Jersey, have invented certain new and useful Improvements in Paper Making, of which the following is a specification.

This invention relates to improvements in paper making, and refers more particularly to the manufacture of a water-proof paper, in which the fibrous constituents of the sheet are made water-proof by means of a water-proof agent, such as pitches, bitumens, paraffines, resins, and the like.

The object of the invention is to produce a water-proof paper, in which the paper is made water-proof simultaneously with the web-forming operation, as for example on the usual multicylinder paper machine.

One of the present applicants, Lester Kirschbraun, has heretofore produced a water-proof paper by incorporating a non-adhesive bituminous emulsion with the fibrous pulp during the web-forming operation on the paper machine. While such paper is water-proof against water in liquid phase, it is less proof against moisture, as for example against the passage of air more or less saturated with water vapor. The present invention is, therefore, directed to the production of a substantially air-tight paper, which is water-proof and partly moisture-proof.

The object of the present invention, therefore, is to provide a novel product, process and apparatus for the production of water-proof paper. It is a further object of the invention to obtain such result on the standard form of multicylinder paper machinery, and in a particularly effective and simple operation.

In carrying out the invention, we take advantage of the process heretofore invented by the applicant Lester Kirschbraun, in which a non-adhesive bituminous emulsion is made, in which the bitumen forms the internal phase of the emulsion, and is therefore capable of being mixed with the fibrous pulp and passed over the paper machinery without sticking to or clogging up the various elements of the machine.

Inasmuch as the manner of making the emulsion forms no part of the present invention, it need not be described in detail. Briefly, however, a non-adhesive emulsion suitable for use in the present invention may be made as follows:

To a suspension of colloidal clay and water preferably in heated condition is added the water-proofing agent such as hot liquid asphalt of about 160° F. melting point with agitation and in such a way as to form an effective non-adhesive emulsion in which the asphalt forms the internal phase. Instead of using colloidal clay, other emulsifying agents may be used, and instead of asphalt there may be used other hydro-carbons, such as paraffines, wax tailings, resins, coal tars, stearin pitches, and the like.

In its broader aspects the invention contemplates the use of these other constituents. Also, in the more specific features of the invention we have found clay and asphalt to be highly desirable.

In order to more clearly understand the invention, we show herewith a diagrammatic vertical sectional view of one apparatus in which the invention may be carried out.

Referring to the drawings, 1 designates a vat of a multicylinder paper machine, in which is mounted the usual cylinder mould 2 and couch roll 3. This vat is adapted to contain a paper stock from which the web is formed and carried on the under side of the blanket 4. 5 designates a similar vat, containing cylinder mould 6. In the vat 5, and interposed between the baffle board 7 and mould 6, is an auxiliary vat 8, adapted to receive a non-adhesive emulsion of the character previously described. The emulsion passes out through the slot 9 on to a levelling board 10 adjustably mounted at 11, the arrangement being such that the emulsion is delivered as close as possible to the periphery of the mould 6 but slightly below the level of the water in the vat. Care should be taken, however, that the board 10 does not at any time come in actual contact with the stock on the mould.

The baffle board 7 is adjustable up and down so as to maintain a level of the stock in the supply chamber 12 and the vat at all times above the upper end of the board 10. The purpose of this is to cause an upward flow of the stock by the board 10,

and this in turn tends to prevent an excess of emulsion dropping down into the vat.

As the cylinder mould 6 rotates in the direction shown by the arrows, a web of fibrous stock is first deposited on the mould, as for example between the points *a* and *b*. A small amount of the emulsion will become mixed with the stock locally, as for example between the points *b* and *c*, but as the formation of the web approaches the point *c*, increasingly greater amounts of the emulsion will be present with the stock, until finally, slightly beyond the delivery point of the board, the emulsion will be the preponderating element of the web. In other words, there will be more emulsion than fibrous stock.

The object of the operation just described is to produce as near as possible a fibreless film of bituminous or pitchy material on the top of the web or ply being formed on the mould 6. As the web *w'* contacts with the blanket 4 carrying on its under side the primary web *w*, the two are united and pass beneath the couch roll 13.

From the couch rolls the multiply sheet passes over the usual suction box 14 to facilitate the removal of the water, and thence to the usual press rolls 15.

When the webs in question are finally passed over the paper machine and the water has been removed, there is produced a multiply sheet in which the plies are integrally united by means of a continuous film of bituminous or pitchy material and a film which is practically devoid of fibre. In other words, this continuous waterproof film being largely devoid of fibre has no pores through which air can pass, as would be the case were the waterproofing material mixed with a larger amount of fibre stock.

We have heretofore referred to the fact that there is an increasing local concentration of the emulsion with the fibrous stock as the mould passes from the point *b* to the point *c*. For example, at the point *b*, the percentage of waterproofing medium with relation to the stock may be 10%, whereas at the point *c*, the amount of bitumen or pitch may be five times the amount of stock, representing at this point a saturation of say 500% of waterproofing agent to fibre, the effect being the production of substantially a continuous non-porous film of bitumen or pitch as the web emerges from the vat. It must be observed that the emulsion by this process does not come in contact with either blankets or cylinder mold.

We claim as our invention:

1. A process of making water-proof paper, consisting in forming a plurality of fibrous webs on a paper machine, and applying to one of said webs as it is being formed locally in the vat a bituminous emulsion substantially devoid of fibre.

2. A process of making water-proof paper, consisting in forming a plurality of fibrous webs on a paper machine, and applying to one of said webs as it is being formed locally a water-proofing agent in a non-adhesive emulsified form.

3. A process of making water-proof paper, consisting in forming a fibrous web on the cylinder mould of a paper machine, continuously applying a water-proofing agent substantially devoid of fibre to a localized portion of the formation to form a superficial film.

4. A process of making water-proof paper, consisting in forming a plurality of fibrous webs on a paper machine, and applying to one of said webs as it is being formed locally, a waterproof pitch in an aqueous vehicle substantially devoid of fibre.

5. A process of making water-proof paper, consisting in forming a plurality of fibrous webs on a paper machine and applying to one of said webs as it is being withdrawn from the forming vat, a water-proofing agent in an aqueous vehicle.

6. A process of making water-proof paper, consisting in forming a fibrous web on the cylinder mould of a paper machine, continuously applying a water-proofing agent in the form of a substantially fibreless film to a localized portion of the formation, and causing an upward flow of the water-proofing agent so as to carry said agent forwardly with the mould.

THOMAS W. MORSE.
LESTER KIRSCHBRAUN.