Nov. 19, 1940. S. G. CRANE 2,221,863

ELECTRIC TIMING DEVICE

Filed Nov. 8, 1937 3 Sheets-Sheet 1

FIG.1.

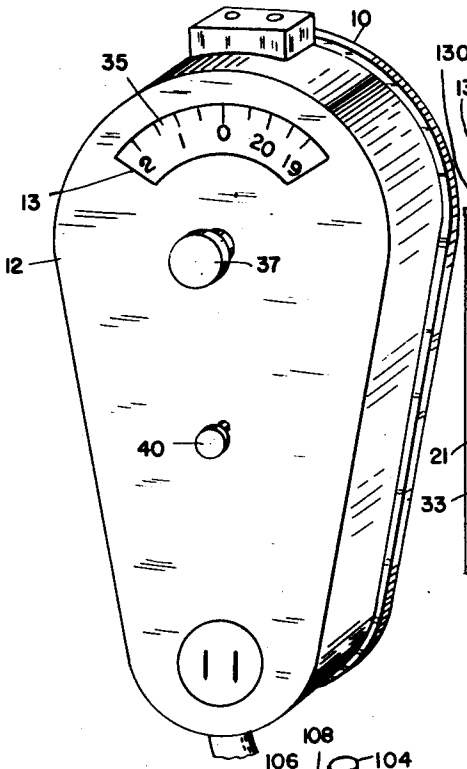

FIG.9.

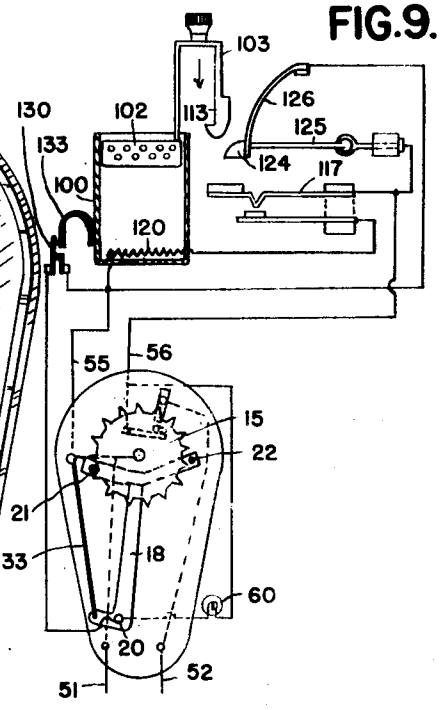

FIG.6.

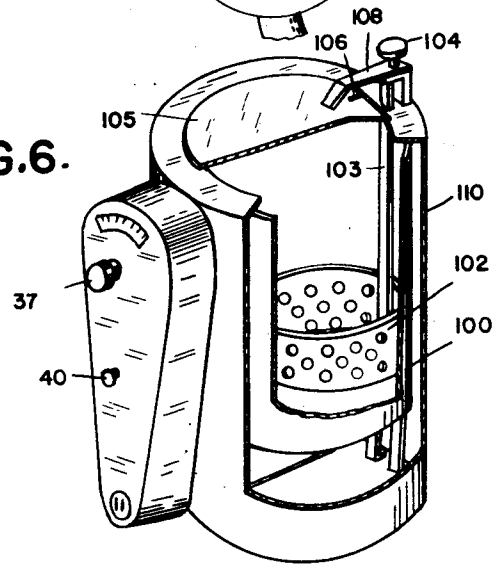

FIG.7.

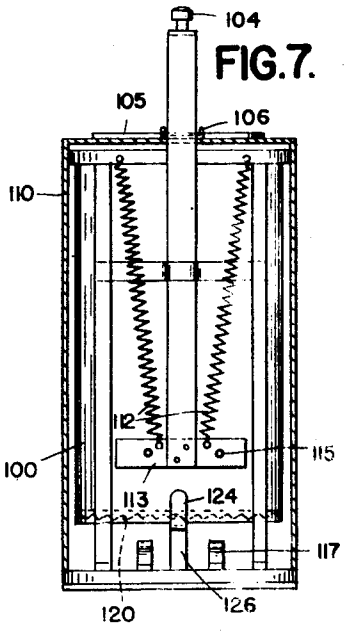

INVENTOR

SAMUEL G. CRANE

BY Swan, Pope & Hardesty

ATTORNEYS

Nov. 19, 1940. S. G. CRANE 2,221,863

ELECTRIC TIMING DEVICE

Filed Nov. 8, 1937 3 Sheets-Sheet 2

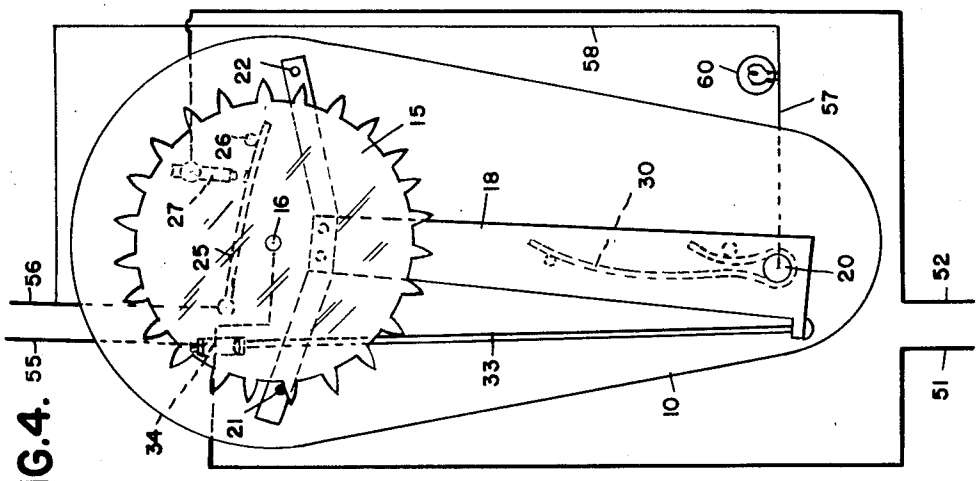

FIG.4.

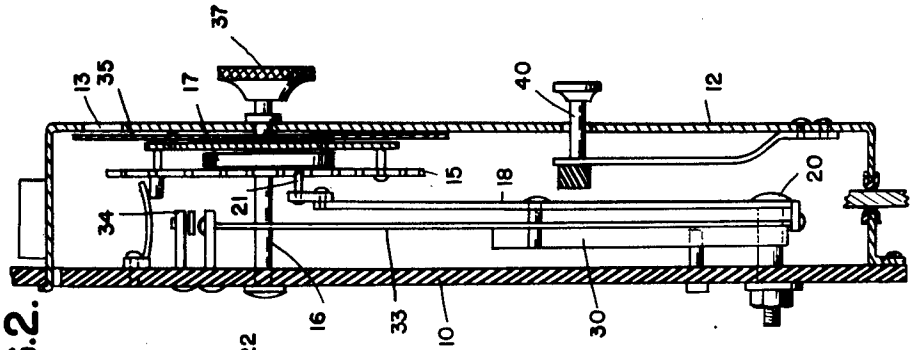

FIG.2.

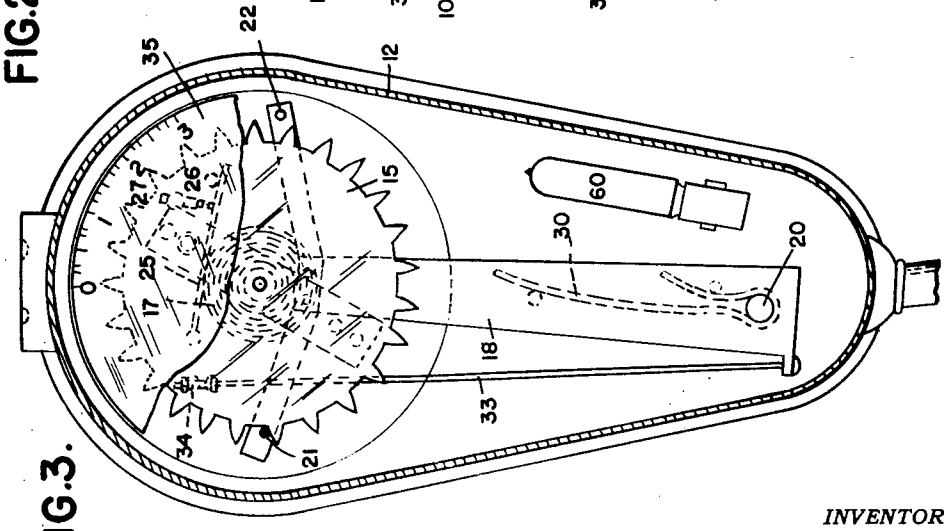

FIG.3.

INVENTOR

SAMUEL G. CRANE

BY Swan, Inge Hardesty

ATTORNEYS

Nov. 19, 1940. S. G. CRANE 2,221,863

ELECTRIC TIMING DEVICE

Filed Nov. 8, 1937 3 Sheets-Sheet 3

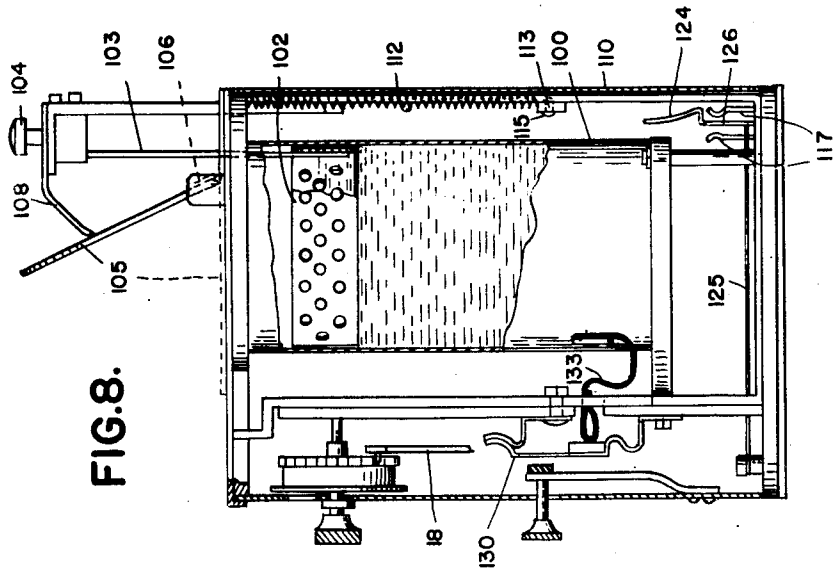

FIG.8.

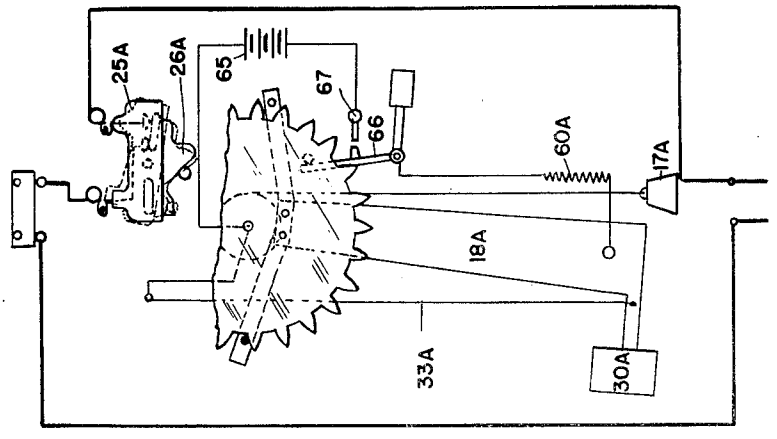

FIG.5.

INVENTOR
SAMUEL G. CRANE
BY Swan, Joyce & Hardesty
ATTORNEYS

Patented Nov. 19, 1940 2,221,863

UNITED STATES PATENT OFFICE

2,221,863

ELECTRIC TIMING DEVICE

Samuel G. Crane, Omaha, Nebr., assignor of one-twentieth to Ralph E. Dutcher, Council Bluffs, Iowa, one-twentieth to Otto O. Hurich, one-twentieth to Ludwig M. Janks, one-twentieth to Albert M. Larsen and three-tenths to Edgar B. Leaverton, all of Omaha, Nebr.

Application November 8, 1937, Serial No. 173,435

8 Claims. (Cl. 161—1)

This invention relates to automatic timing devices for controlling electrical circuits, and aims to provide an improved electrically operable timing device which consumes very little current, and is capable to handling loads without arcing or harmful sparking at the contacts.

Another important object is to provide improved means for timing cooking devices, and a novel automatic cooker for boiling foods and the like for any predetermined length of time, the parts of which are so arranged that the current is disconnected and the cooked matter raised from the water upon expiration of the time for which the device is set to run.

A further object is to provide an improved timing device which is capable of withstanding relatively high temperatures, and which also contains no magnets and is accordingly operable in a magnetic field.

Still another object is to provide a timing device of the character indicated from which all springs are eliminated, and the working parts of which move slowly, and which accordingly may be operated without lubrication over long periods of time without danger of wearing out or of failure from other causes.

Still another object is to provide a timing device of the character indicated which may easily and quickly be set to run for any predetermined length of time, at the expiration of which it operates switching means to control desired circuits. A further object is to provide such a timing device which constantly indicates during its running the time remaining before operation of the switching means.

A still further object is the provision of a timing device of the character indicated having a constant load control circuit which cannot cause radio interference.

Another important object inheres in the provision of a control circuit incorporating the timing means, which circuit may be entirely independent of or shunted across the controlled feed lines.

Still another object is the provision in conjunction with my improved timing means of thermostatic overcontrol means usable in conjunction with electrically heated devices to prevent operation of the timing means until a predetermined heat has been reached, and which automatically initiates operation of the timing means upon attainment of such predetermined temperature, whereafter the timing means may assume control of the apparatus.

Other objects include structural embodiment of the invention in a cooking device so arranged that although an exposed heating element directly immersed in water to be boiled may be provided, it is not possible to reach into the water or to add water to the receptacle, or otherwise to incur the danger of a shock while the current is on.

Other objects and advantages will be apparent from the following description, wherein reference is made to the accompanying drawings illustrating preferred embodiments of my invention and wherein similar reference numerals designate similar parts throughout the several views.

In the drawings:

Figure 1 is a perspective view of my improved timing device incorporating the principles of this invention.

Figure 2 is a substantially central longitudinal sectional view thereof.

Figure 3 is a plan view of the mechanism with the cover removed and the timing dial partly broken away.

Fgure 4 is a view similar to Figure 3 showing only the escapement switch controlling means and also diagrammatically showing the connections of the various electrical elements.

Figure 5 is a schematic diagram of a somewhat modified embodiment.

Figure 6 is a perspective view of a food boiler provided with timing means constructed in accordance with this invention.

Figure 7 is a rear elevation view with the casing broken away showing the automatic elevating means by which the boiled matter is lifted from the water.

Figure 8 is a view thereof partly in section and partly in side elevation with parts broken away, and

Figure 9 is a diagrammatic view showing the connections of the several elements.

Referring now to the drawings, and particularly to Figures 1 to 4 inclusive, the improved timing mechanism will be seen to be mounted upon a base plate 10 which forms the back wall of a casing, the cover of which, designated 12, also carries some of the apparatus and is removably secured to the base plate. The timing means comprises an electrically controlled escapement mechanism arranged to throw a switch upon the expiration of a predetermined interval of time after the device is set in operation. The escapement wheel 15, which may of course be either spring or weight driven, is controlled in its rotation by a pallet generally designated 18. The pallet is pivoted to the base on a pin 20 and carries escapement pins 21—22, alternately engage-

able in the conventional manner with the toothed periphery of the escapement wheel. The pallet is formed entirely of metal, except for escapement pin 21, which is either formed of insulating material, as shown, or insulated from the pallet. Pin 22, however, is uninsulated from the pallet. The escapement wheel is also formed of conducting material and pivoted to the insulating base on a pin 16. The driving means for the escapement wheel is shown as a torsion spring 17 secured at its inner extremity to the pin and at its outer end reacting against the escapement wheel.

A switch arm 25 is actuable by a pin 26 projecting from the escapement wheel. The switch arm is normally in engagement with a fixed contact 27, but is separable therefrom by the pin 26 as the escapement wheel completes its rotation. It will be recognized that the device might with equal facility be arranged to close a circuit rather than open it. Spring or weight means such as the torsion bar 30 urges the pallet to the left, as viewed in Figures 3 and 4. A hot wire 33, which forms a part of a shunt circuit presently to be described, holds the pallet in the right hand position, when the wire is cool and accordingly contracted. In such position the pallet is insulated from the escapement wheel by pin 21. When the wire is heated, however, and expands sufficiently, it allows the pallet to swing to the left until pin 21 frees the wheel, and it is caught by the escapement pin 22, which completes a circuit between the pallet and the escapement wheel.

The wheel is urged clockwise by the spring 17, and comes to rest in the position in which it is shown in Figure 4 after having opened switch blade 25. The pallet arm 18 is formed of spring material and normally holds the escapement pins in a position to engage the escapement teeth, although the arm may be flexed downardly to free the teeth from the wheel. The tops of the escapement pins are also so inclined that when the wheel is manually rotated in a counter-clockwise direction, the pins are forced downardly to permit such rotation by camming action, such movement being permitted by the flexibility of the pallet arm.

A dial 35 secured to and rotatable with the escapement wheel is visible through a window opening 13 in the cover 12, to indicate the setting of the wheel, and constantly shows the length of time which the device has yet to run to reach switch-open position. A knob 37 secured to the wheel and dial assembly and projecting from the cover of the casing allows counter-clockwise rotation of the dial and wheel to any desired set position. A trip pluger 40 projecting from the face of the cover is so arranged that when depressed it may be made to engage and push down on the pallet arm, to free the escapement pins from the wheel 15 and allow the latter to spin instantly to switch-open position.

Referring to Figure 4, in which the connections are diagrammatically shown, current is supplied to the device through lead wires 51—52. Wire 51 is connected to the terminal post 34 and so to the hot wire 33. Such post is also connected to the escapement wheel 15 through post 16, as well as to the wire 55, which froms one of the outlet leads to the controlled apparatus. The other input lead, 52, is connected to switch contact 27, while to the other switch contact is connected the output lead 56. The other end of the hot wire is connected to pallet arm 18, while the arm is connected, through wire 57 with a load, indicated as an incandescent lamp 60. The wire 58 connects the other terminal of the lamp to the output lead 56.

The load represented by lamp 60 will be seen to be shunted across the line, and it will be seen that when the wheel is set, to move pin 26 away from switch blade 25, allowing the switch to close and imposing tension upon the spring 17, the current for the bulb 60 must pass through the hot wire 33, when insulated pin 21 is in contact with the wheel 15, while when pin 22 engages the wheel, the hot wire is short-circuited by the connection provided through the escapement wheel and pallet. The load of the lamp 60 may be very slight, just sufficient to cause the wire 33 to expand sufficiently to allow the pallet to swing to the left under the action of spring 30. Alternate swinging movement of the pallet and controlled intermittent rotation of the escapement wheel will be seen to result, by reason of the fact that the wire, starting in cold position (and with pin 21 insulating the pallet from the wheel), is heated by the load as soon as switch 25—27 is closed. When the wire expands sufficiently and the pallet moves to the left, the wheel is allowed to advance until the next tooth is caught by pin 22. Pin 22 provides contact between the wheel and pallet, short-circuiting the hot wire, which, relieved of its load, cools and contracts, again pulling the pallet to the right, allowing the wheel to advance until pin 21 catches the next tooth. Insulated pin 21 then breaks the short-circuit, again causing the wire to carry the shunt current. The wire then heats and re-expands, and the same cycle is repeated. This intermittent swinging of the pallet and rotation of the escapement wheel continues until the pin 26 strikes the switch arm 25, breaking the circuit through both the main line and the shunt circuit which contains the load 60.

Since the shunt load broken by pin 22 may be very light, and switch 25—27 which carries the main load is broken with a quick movement, and may incorporate relatively heavy contacts, the device will be seen to be capable of handling relatively heavy currents without arcing.

A mercury switch may of course be substituted for contacts 25—27, as shown in the modified construction of Figure 5 or any other switch desired may with equal facility be actuated by the escapement wheel. Neither is it necessary that the controlling current for the timing circuit be from the same source as the controlled current. As shown in Figure 5, separate switches may be actuated by the escapement wheel, the switch 25A being arranged to break the main line current, while a separate switch 66—67 incorporated in the control circuit also breaks the latter when the wheel has reached the off position. The control circuit is shown as provided with a separate source of current, indicated as a battery 65, and is entirely distinguished from the main controlled or feed circuit. Other portions of this embodiment have been given reference characters similar to those used in connection with the first embodiment, distinguished by the addition of the letter "A" to each. Weights (30A, 17A) will be seen to be used instead of springs to actuate the pallet and the escapement disc.

A typical application of my improved timing device is illustrated in Figures 6, 7, 8 and 9 wherein is shown an automatic boiling device, particularly for eggs and other foods. Within the outer sheathing 110 and having its walls spaced therefrom is a boiling pot 100. A basket-like tray 102 is slidable in the boiler from a level above

to one below the intended water level. The tray is carried by a bifurcated vertically slidable arm 103 having one leg inside and one outside the boiler. At its top the tray supporting rod is provided with a knob 104 by which the tray may be pushed downardly. A hinged lid 105 is constantly urged open by a spring 106 incorporated in its hinge, and an arm 108 projecting outwardly and downwardly from the top of the tray supporting rod 103 is engageable with the lid to close the same as the tray is lowered. The outer section of tray rod 103 slides in the space between the boiler and the outer wall 110. Springs 112 connected to the bottom of the outer leg of the rod, and to the casing, tend to lift the tray. At its bottom the outer leg of the rod carries an insulating cross-piece 113 through which extend metallic contactor studs 115. The studs are engageable with contact clips 117 to close the circuit to the heating element when the tray is depressed, and open the circuit when the tray is raised. The switching means thus provided is in series with the output lead 56 from the timing device to the heating element 120, the other output lead 55 being connected directly to the heating element. Also shunted across the heating element is a hot wire 125 which expands when the current is on, to allow the latch piece 124 to engage and hold in depressed position the cross piece 113 and so the arm 103 and its attached tray 102. The spring portion 126 (or weight) which urges the latch-piece toward latching position is normally restrained by the wire 125 from projecting the latch-piece to that position; the wire, when cold, being too short to allow such projection.

It will be seen that by turning the knob 37 to set the timing mechanism to run for a desired interval and depressing the plunger rod 103 by means of the handle 104 the circuit is closed to the heating element 120, through the switch portions 117 and the time device, which corresponds to the embodiment first described. The current also expands the wire 125, allowing the latch piece 124 to hold the tray in depressed position. The timing device maintains this condition for a predetermined time, the lid being held closed by the arm 108. Upon the expiration of the interval for which the timer is set, the current supply to the heating element is interrupted, wire 125 contracts, freeing the latch from the tray arm and allowing the tray to be elevated by the springs 112 to a position above the water in the boiler and readily accessible from the open top, the lid 105 then being raised by the spring 106.

A switch 130 normally short-circuits and prevents operation of the timing mechanism, but is opened by thermostat 133, which is secured to the boiler and directly responsive to the temperature thereof, when the boiler reaches a predetermined temperature. Thus the thermostat 133 may be set to initiate operation of the timer upon attainment of the boiling temperature of water by the boiler, after which the heating will continue for whatever time the timing device is set to run.

While it will be apparent that the illustrated embodiments of my invention herein disclosed are well calculated to adequately fulfill the objects and advantages primarily stated, it is to be understood that the invention is susceptible to variation, modification and change within the spirit and scope of the subjoined claims.

What I claim is:

1. Electrically regulated timing means comprising in combination with current-supplying conductors, current controlling means in series with at least one thereof, and electrically controlled timing means for actuating said current controlling means comprising a rotatable member, and means for rotating the same intermittently and at a controlled rate, including a member expansible and contractible in response to passage of electric current therethrough and incorporated in a shunt circuit across said conductors, means responsive to expansion and contraction of said member for making and breaking a short circuit across said member, to cause alternate expansion and contraction thereof, a load in series with said last mentioned means and with said expansible and contractible member and also incorporated in said shunt circuit, said shunt circuit being connected to one of said conductors upon the side of said current controlling means more remote from the source of current, whereby the shunt circuit is broken when said same current controlling means is open.

2. In combination with a source of electrical energy and a plurality of current supplying conductors connected thereto, switching means in series therewith, and timed operating means for controlling said switching means including an escapement mechanism, electrically operable means for controlling said escapement mechanism, and a separate circuit for supplying current to said electrically operable means; said escapement mechanism comprising an escapement wheel, means for driving the same, a pallet member for controlling rotation thereof, and said electrically operable means comprising an electrically expansible and contractible member incorporated in said separate circuit for moving said pallet member, and means responsive to moving of the pallet member to make and break a short circuit across said expansible and contractible member, to cause oscillation of current flow therethrough, and a constant load in said separate circuit in series with said last mentioned means and with said expansible and contractible member.

3. Timing means for an electric circuit, comprising an escapement wheel, means for rotating the same, a pallet member movable to control the rotation of the escapement wheel and having contact portions which alternately make and break an electrical connection between the pallet and escapement wheel during movement of the pallet, and operating means for the pallet including a source of current, a motor element operable thereby and connected in circuit with said contact portions to be intermittently energized by the making and breaking of said electrical connection, said motor element being mechanically connected to the pallet to move the same intermittently whereby to control the rotation of the escapement wheel.

4. Means as set forth in claim 3 including a scale connected to said escapement wheel for indicating the position thereof, and means for manually turning the wheel to various set positions to fix the extent of movement thereof required to actuate said circuit controlling means.

5. Means as set forth in claim 3 in which said pallet member is laterally movable out of engagement with the escapement wheel to allow unrestrained rotation of the latter under the influence of said driving means.

6. Means as set forth in claim 3 in which said pallet is laterally yieldably movable away from the escapement wheel to allow unrestrained ro-

tation thereof under the influence of said driving means, said pallet having wheel-engaging portions which normally rock into and out of engagement with said wheel, at least one of said portions having a surface so inclined that upon rotation of said wheel in a direction opposite to that in which it is rotated by said driving means, the pallet is forced away from the escapement wheel to allow such reverse movement of the wheel.

7. Means as set forth in claim 3 in which said motor element comprises a member expansible and contractible in response to electrically induced heating and cooling and mechanically connected to the pallet to rock the same by its expansion and contraction.

8. Electrically regulated timing means comprising in combination with current-supplying conductors, current controlling means in series with at least one thereof and electrically controlled timing means for actuating said current controlling means comprising a rotatable member and means for rotating the same intermittently and at a controlled rate, including a member expansible and contractible in response to passage of electric current therethrough and incorporated in a shunt circuit across said current supplying conductors, means responsive to expansion and contraction of said member for making and breaking a short circuit across said member, to cause alternate expansion and contraction thereof, and a load in series with said last-mentioned means and with said expansible and contractible member and also incorporated in said shunt circuit.

SAMUEL G. CRANE.