AU9180329

(12) PATENT ABRIDGMENT (11) Document No. AU-B-80329/91
(19) AUSTRALIAN PATENT OFFICE (10) Acceptance No. 649254

(54) Title
A DEVICE FOR THE EXTRACTION OF CARTRIDGES

(51)[5] International Patent Classification(s)
A47J 031/40

(21) Application No. : **80329/91** (22) Application Date : **10.07.91**

(30) Priority Data

(31) Number	(32) Date	(33) Country
90114402	**27.07.90**	**EP EUROPEAN PATENT OFFICE (EPO)**

(43) Publication Date : **30.01.92**

(44) Publication Date of Accepted Application : **19.05.94**

(71) Applicant(s)
SOCIETE DES PRODUITS NESTLE S.A.

(72) Inventor(s)
OLIVIER FOND

(74) Attorney or Agent
SHELSTON WATERS , 55 Clarence Street, SYDNEY NSW 2000

(56) Prior Art Documents
EP 70403

(57) Claim

1. A device for the extraction of roast and ground coffee contained in a sealed cartridge, designed for the preparation of a beverage in a cartridge holder for coffee machines, comprising an extraction fluid injector adapted to perforate and inject extraction fluid into the sealed cartridge and around the periphery of the injector a circular sealing surface generally perpendicular to the injector and designed to ensure imperviousness on the upper face of said cartridge during its extraction, the device further comprising a tightening ring with tightening ramps for supporting the cartridge holder with the upper face of the cartridge adjacent the sealing surface, said tightening ring being coaxial with the injector and the axes of the outlet holes of the injector forming an angle of 0 to 25° with the horizontal.

649254

AUSTRALIA

PATENTS ACT 1990

COMPLETE SPECIFICATION

FOR A STANDARD PATENT

ORIGINAL

Name of Applicant: SOCIETE DES PRODUITS NESTLE S.A.

Actual Inventor: Olivier Fond

Address for Service: SHELSTON WATERS
55 Clarence Street
SYDNEY NSW 2000

Invention Title: "A DEVICE FOR THE EXTRACTION OF CARTRIDGES"

The following statement is a full description of this invention, including the best method of performing it known to us:-

A device for the extraction of cartridges

This invention relates to a device for the extraction of cartridges designed for the preparation of a beverage in a cartridge holder for coffee machines.

EP 242 556 relates to a device for the extraction of cartridges comprising a hollow cylindrical body with an inner shape substantially corresponding to the outer shape of the cartridge to be extracted, the body comprising an injector at its upper end following the axis of the cylinder and, on its outer part, a spring holding a ring for the release of the cartridge after extraction. Although a device of this type enables a coffee of good quality to be obtained, it can only be used with one type and one shape of cartridge perfectly adaptable to the inner shape of the hollow cylinder.

The extraction device according to the invention can be used much more universally, i.e. for the extraction of capsules of different shapes and sizes, is relatively simple in design and enables cartridges to be dependably extracted with good reproducibility.

The present invention relates to a device for the extraction of roast and ground coffee contained in a sealed cartridge, designed for the preparation of a beverage in a cartridge holder for coffee machines, comprising an extraction fluid injector adapted to perforate and inject extraction fluid into the sealed cartridge and around the periphery of the injector a circular sealing surface generally perpendicular to the injector and designed to ensure imperviousness on the upper face of said cartridge during its extraction, the device further comprising a tightening ring with tightening ramps for supporting the cartridge holder with the upper face of the cartridge adjacent the sealing surface, said

AUSTRALIA

tightening ring being coaxial with the injector and the axes of the outlet holes of the injector forming an angle of 0 to 25° with the horizontal.

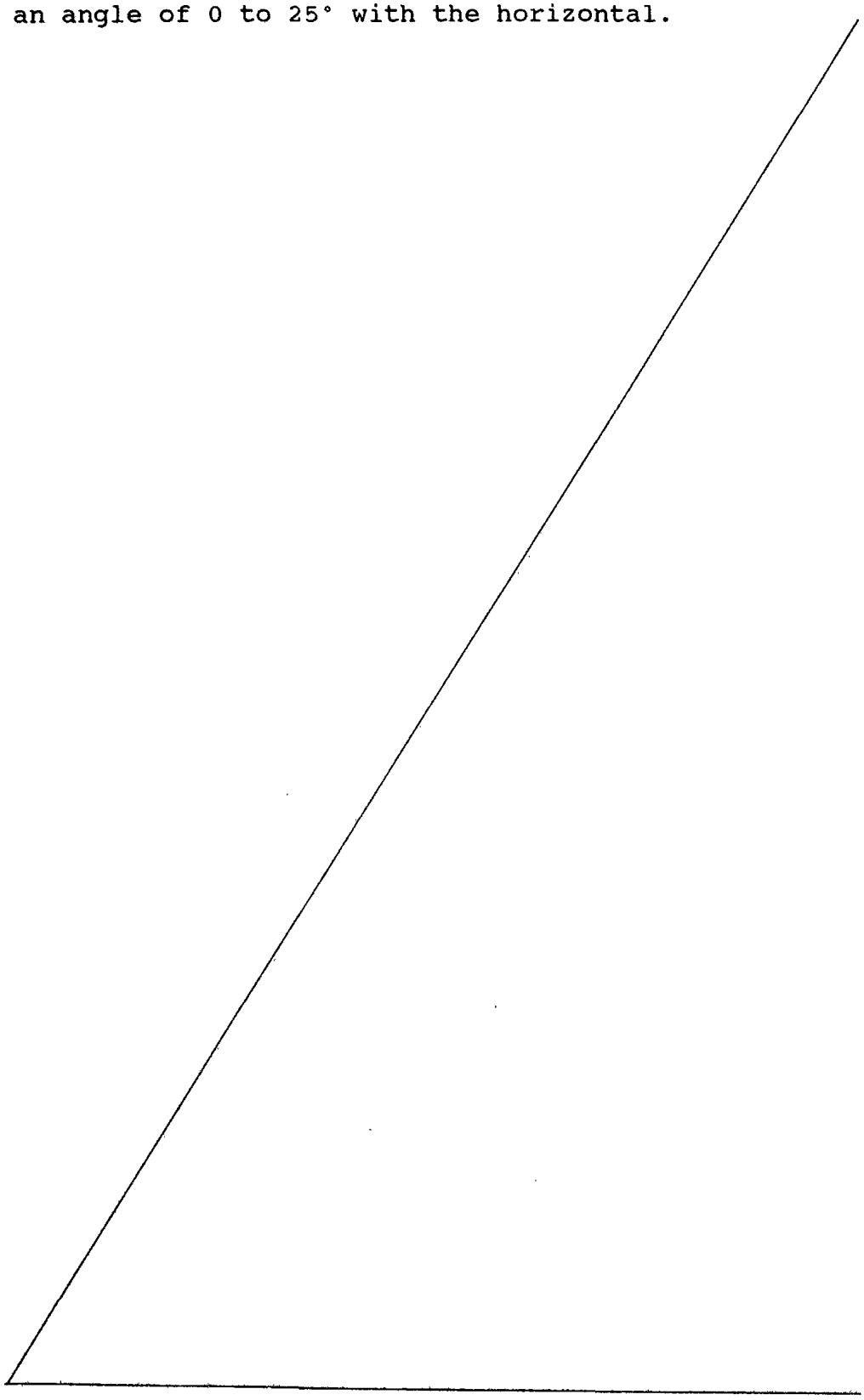

The circular surface may be completely flat, above all if the cartridge to be extracted has a flat upper face. At all event, the surface is always flat in the zone where the imperviousness of the capsule is established, i.e. in the zone close to the periphery of the capsules. The imperviousness is totally guaranteed by this circular surface.

The injection consists of an injection needle which performs the dual function of perforating the upper face of the cartridge and injecting water. The injector comprises between one and ten and preferably between four and eight holes injector and optionally at two levels.

By angle is meant the angle formed above the plane of the horizontal. By virtue of the geometry of the holes of the needle, the water is thus directed towards the top of the capsule so that is uniformly distributed over the entire surface of the capsule after deflection at the top of the capsule (or cartridge).

The orientation of the holes of the injection needle is favourable because it permits the use of capsules having variable sizes and height-to-diameter ratios, more particularly with small values (from 1 to 0.12), and relatively lightly compacted layers of coffee.

This is because, by being directed slightly upwards, the water injected through the few holes of the needle is deflected in the upper zone of the capsule and is returned towards the layer of coffee in far more dispersed form. Thus, the water comes into contact with the layer of coffee after partial dispersion and no longer in the form of a few localised jets.

This phenomenon is important during the first few seconds of the extraction process when the layer of coffee is not stabilized. In addition, this dispersion is favourable if it is desired to obtain a dispersion and reduction of the kinetic energy of the water injected so that the layer of coffee is not excessively compacted, thus avoiding any risk of the layer of coffee choking under excessive pressure. By being lightly compacted, the layer of coffee moves from its place in the capsule which is then taken by the water.

During the remainder of the extraction process, the jets of water are then released more or less into this volume of water and, in no case, are the jets directed directly onto the coffee.

The holes of the injector are between 0.2 and 1.5 mm in diameter. They must be long enough to allow the water to arrive under a pressure of as high as 20 bar, but must not be too large in order to avoid any risk of reflux of the coffee grounds on completion of extraction.

To be sure of good penetration of the water into the cartridge during the extraction process, the holes of the injector are situated at a distance of 3 to 8 mm from the circular surface.

The distance between the bottom of the injector and the lower edge of the tightening ramp is at least equal to the thickness of the tightening ramp, for example at least 5 mm and as much as 25 mm, depending on the configurations of the cartridge holders and the capsules. The object is to ensure both minimal and the cleanest possible tearing of the upper face of the cartridge to be extracted to avoid soiling of the extraction device with coffee grounds during release of the capsule after extraction.

The cartridge is held in the extraction device by means of a cartridge holder of which the internal geometry is variable according to the size of the capsules used. It comprises two diametrically opposite retaining lugs designed to cooperate with the tightening ramps of the tightening ring. The opening of the tightening ramps should be the smallest possible in relation to the width of the retaining lugs of the cartridge holder to promote better centring of the capsule before it is perforated by the water injector. After the cartridge holder has been secured in the tightening ring, the imperviousness of the extraction device is established by compression of the outer ring of the capsules against the flat circular surface of the device according to the invention. This circular surface is made of a material which ensures high impermeability, i.e. either a flexible material, such as natural or synthetic rubber, or a rigid material, such as Inox coated with PTFE (Teflon) or filled PTFE.

The use of several types or sizes of capsules from one and the same extraction device is made possible by using cartridge holders of which the inner part is specific to the capsule while the outer part, common to all types, is compatible with the tightening ring.

In particular, it is possible to use the capsules according to applicants' European Patent Application filed on the same date as the present application under the title "A sealed cartridge for the preparation of a beverage and a process and device for its production" (EP 90114404.8).

It is also possible to use the extraction device according to applicants' European Patent Application filed on the same dated as the present application under the title "A process and a device for the extraction of sealed cartridges" (EP 90114401.4).

It is also possible to extract open cartridges, for example those object of the EP Patent Application No. 90114405.5.

After extraction, the capsules are easily released by loosening the cartridge holder and releasing the capsule simply by inverting the capsule holder.

The invention is described in more detail in the following with reference to the accompanying drawings, wherein:

Figure 1 is a section through the device according to the invention.

Figure 2 is a section through a second embodiment of the device according to the invention.

Figure 3 is a view from beneath of the device shown in Fig. 1.

Figure 4 is a section through the complete cartridge extraction system using the device shown in Fig. 2.

The extraction device (2) according to the invention comprises a water injector (7) having water outlet holes (15) forming an angle α with the horizontal. In Fig. 1, this angle is 20°. The extraction device additionally comprises a tightening ring (8) with tightening ramps (9) and, around the periphery of the injector (7), a flat circular surface (16) of rubber to establish imperviousness during extraction of the sealed cartridge.

Fig. 1 also shows the distance between the bottom of the injector and the lower edge of the tightening ramp of the tightening ring. In the case of this configuration, $h = 10$ mm.

Figs. 2 and 3 show another embodiment of the device according to the invention. This device (20) comprises a water injector (21) having water outlet holes (22). In addition, the device comprises a tightening ring (23) with tightening ramps (24) and a circular surface (25) around the periphery of the injector (21). This surface is divided into three zones, namely: two flat parts, one at the centre (26) and the other at the periphery (28), and a circular bore (27) provided for the extraction of capsules having a curved upper surface. The outer zone (28) must be flat to ensure imperviousness during extraction. The flat zone (26) is necessary because, during piercing of the capsule when the upper membrane deforms downwards, the zone (26) compensates this deformation to avoid the reflux of coffee grounds during release of the capsule after extraction.

The complete extraction system (Fig. 4) additionally comprises a cartridge holder (10) with two retaining lugs (11) designed to cooperate with the ramps (24). The cartridge holder comprises a recess for the cartridge (1) and, beneath this recess, a fixed central finger (12) and radial fins (13) which support the lower wall (17) and the filter (4) of the cartridge to be extracted. The handle (14) provides for easy handling of the cartridge holder.

The cartridge (1) containing the coffee (30) is introduced into the cartridge holder (10) and engaged in the tightening ring (23), the water injector (21) piercing the upper face of the cartridge (1).

The water arrives through the orifices (22) of the water injector (21) and wets the entire layer of coffee (30). Under the effect of the water pressure, the lower face (17) of the cartridge deforms and is applied against the central finger (12). The face tears on reaching its yield stress. The filter (4) also deforms, but is of

such a thickness that it does not tear. The actual extraction process can then begin. The coffee issues through the orifices (31) of the cartridge holder (10).

The surface (25) of rubber guarantees high imperviousness during the extraction process while the orifices (22) directed towards the top of the capsule ensure thorough wetting of the layer of coffee.

THE CLAIMS DEFINING THE INVENTION ARE AS FOLLOWS:-

1. A device for the extraction of roast and ground coffee contained in a sealed cartridge, designed for the preparation of a beverage in a cartridge holder for coffee machines, comprising an extraction fluid injector adapted to perforate and inject extraction fluid into the sealed cartridge and around the periphery of the injector a circular sealing surface generally perpendicular to the injector and designed to ensure imperviousness on the upper face of said cartridge during its extraction, the device further comprising a tightening ring with tightening ramps for supporting the cartridge holder with the upper face of the cartridge adjacent the sealing surface, said tightening ring being coaxial with the injector and the axes of the outlet holes of the injector forming an angle of 0 to 25° with the horizontal.

2. A device as claimed in claim 1, characterized in that the circular surface adjacent the periphery of the injector is flat.

3. A device as claimed in claim 1 or claim 2 characterised in that the injector comprises between one and ten holes and preferably four to eight holes.

4. A device as claimed in any of claims 1 to 3, characterized in that the holes of the injector are between 0.2 and 1.5 mm in diameter.

5. A device as claimed in any of claims 1 to 4, characterized in that the holes of the injector are situated at a distance of 3 to 8 mm from the circular surface.

6. A device as claimed in any of claims 1 to 5, characterized in that the distance between the bottom of the injector and the lower edge of the tightening ramp (h) is between 5 and 25 mm.

7. A device as claimed in any of claims 1 to 6, characterized in that the constituent material of the flat circular surface is rubber or teflonized steel.

8. A device as claimed in any one of the preceding claims wherein the circular sealing surface is contoured to receive a cartridge having a correspondingly curved upper surface.

9. A device for the extraction of roast and ground coffee contained in sealed cartridges substantially as herein described with reference to Figures 1 and 3 or Figures 2 and 4 of the accompanying drawings.

Dated this 25th Day of February, 1994

SOCIETE DES PRODUITS NESTLE S.A.

Attorney: LEON K. ALLEN

Fellow Institute of Patent Attorneys of Australia

of SHELSTON WATERS

Abstract

A device for the extraction of cartridges

The invention relates to a device (2) for the extraction of cartridges designed for the preparation of a beverage in a cartridge holder for coffee machines, comprising a tightening ring (8) with tightening ramps (9) for the cartridge holder, an injector (7) coaxial with the tightening ring and, around the periphery of the injector, a circular surface (16) perpendicular to the injector and designed to ensure imperviousness on the upper face of said cartridge during its extraction.

Fig. 1

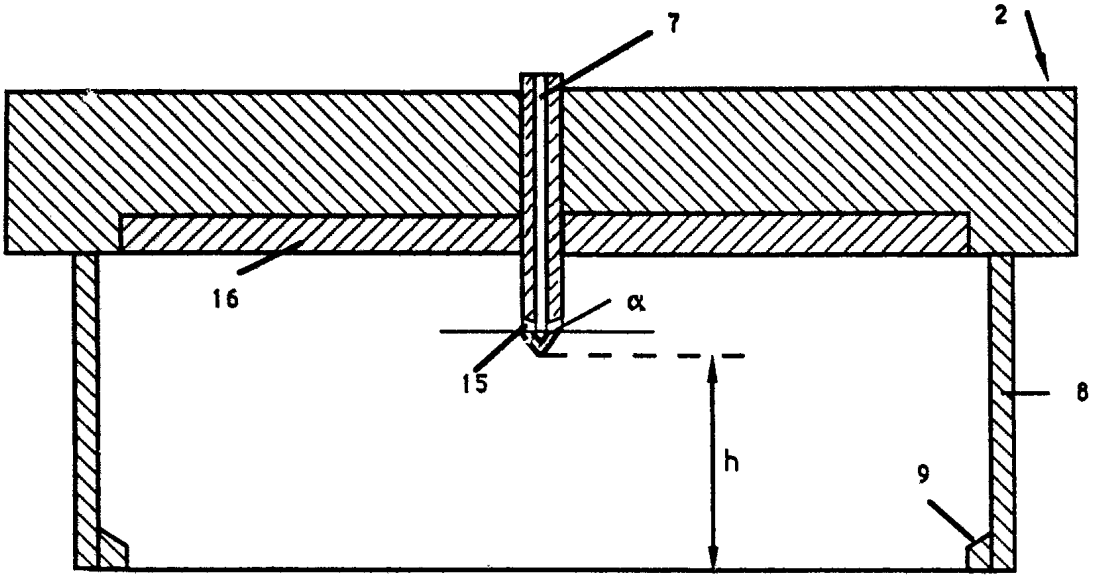

FIGURE 1

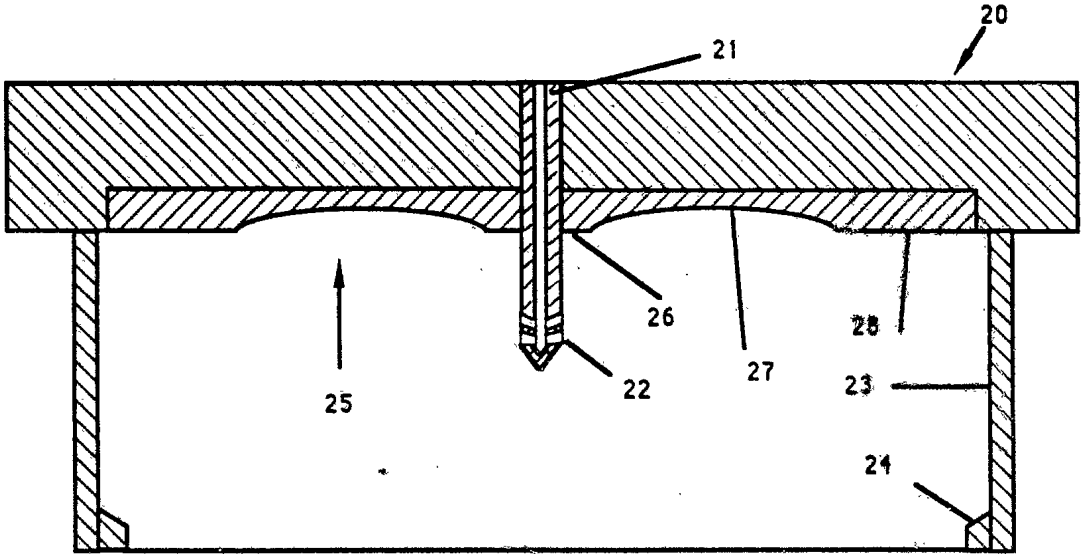

FIGURE 2

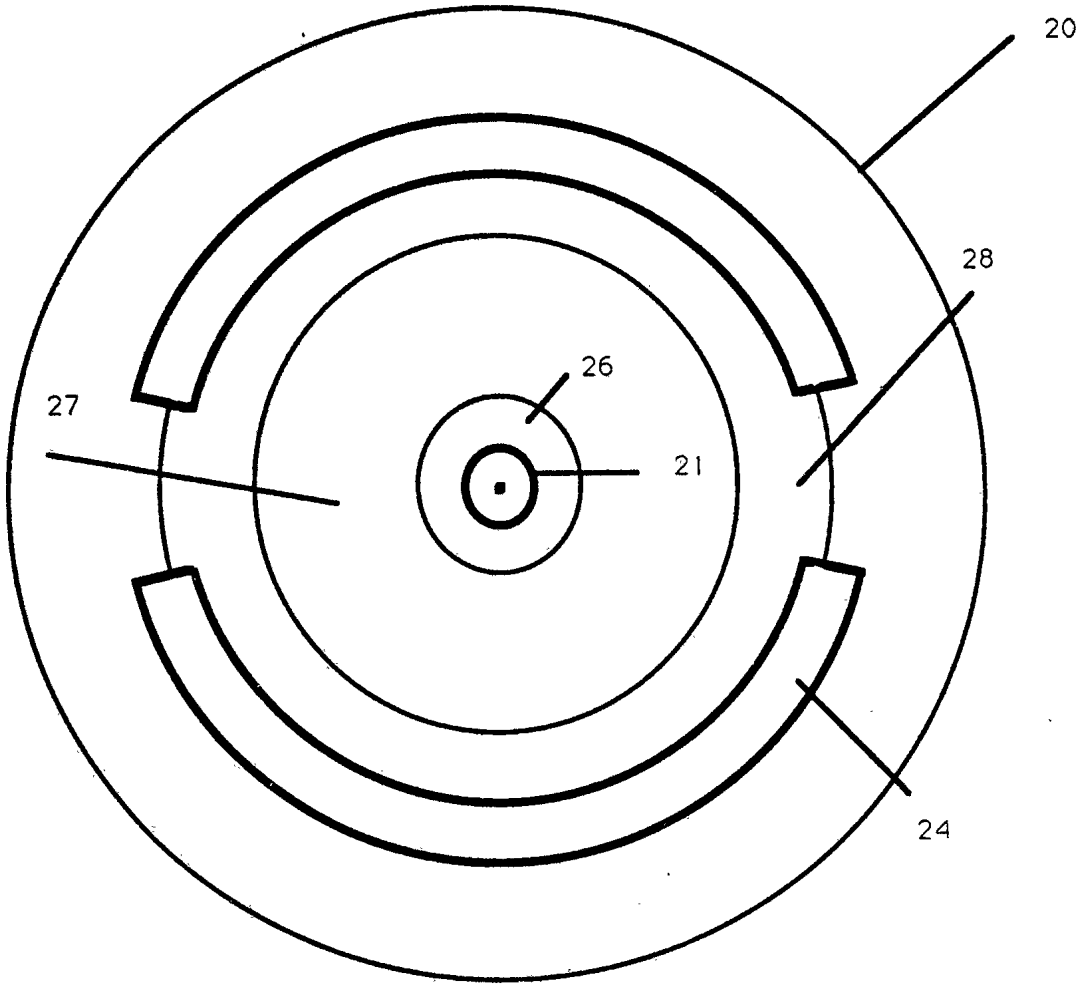

FIGURE 3

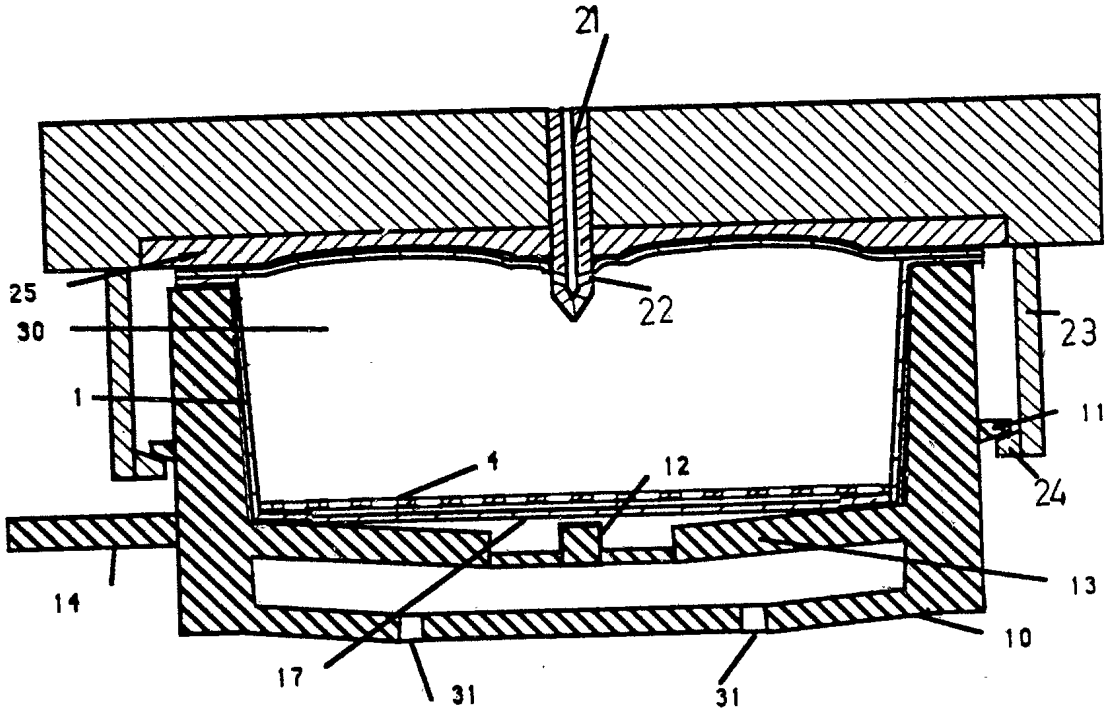

FIGURE 4