Aug. 19, 1924. 1,505,729

F. W. ROBERTSHAW

WATER HEATING APPARATUS.

Filed Nov. 23, 1921 2 Sheets-Sheet 1

Fig. 1.

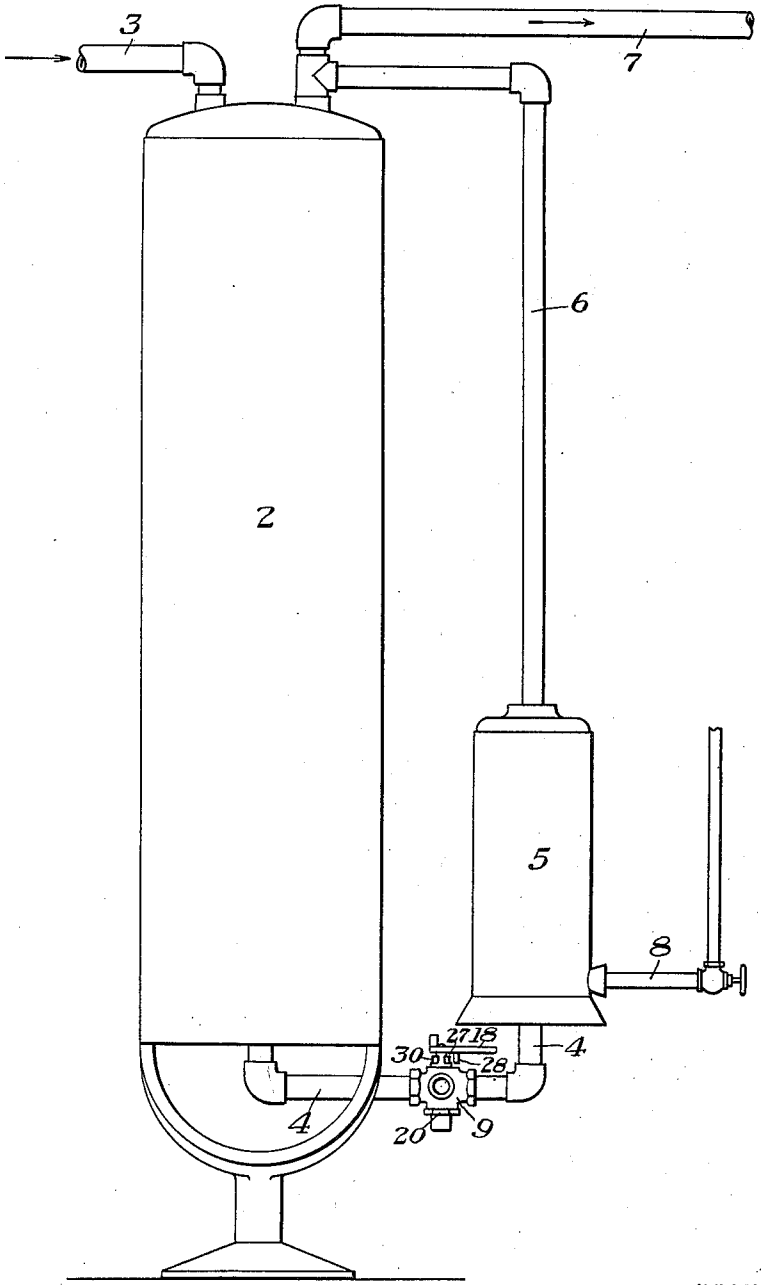

INVENTOR

Frederick W. Robertshaw,

by Byrnes, Stebbins, Burgess & Carmeley,

his Attys.

Aug. 19, 1924. 1,505,729

F. W. ROBERTSHAW

WATER HEATING APPARATUS

Filed Nov. 23, 1921 2 Sheets-Sheet 2

Fig. 2.

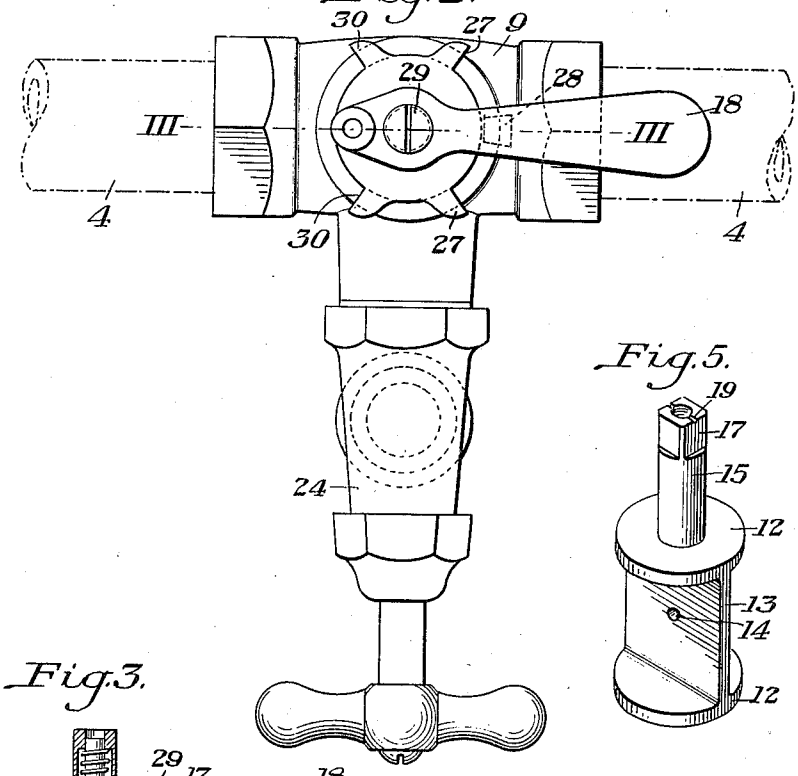

Fig. 5.

Fig. 3.

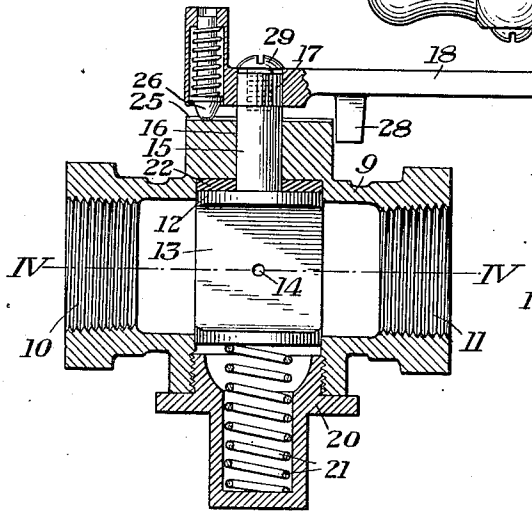

Fig. 4.

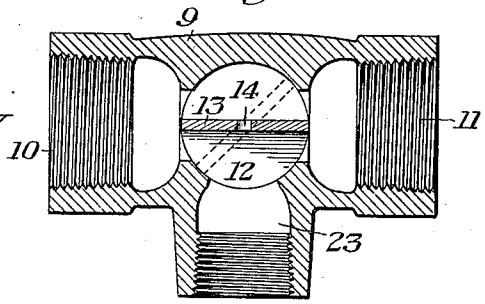

INVENTOR

Frederick W. Robertshaw,

by Byrnes, Stebbins, Burgess & Parmelee

his Atty.

Patented Aug. 19, 1924. 1,505,729

UNITED STATES PATENT OFFICE.

FREDERICK W. ROBERTSHAW, OF PITTSBURGH, PENNSYLVANIA.

WATER-HEATING APPARATUS.

Application filed November 23, 1921. Serial No. 517,223.

To all whom it may concern:

Be it known that I, FREDERICK W. ROBERTSHAW, a citizen of the United States, residing at Pittsburgh, in the county of Allegheny and State of Pennsylvania, have invented a new and useful Improvement in Water-Heating Apparatus, of which the following is a full, clear, and exact description.

The present invention relates broadly to water circulating systems and to drain valves for use in connection therewith.

At the present time, it is customary to couple hot water tanks with a heater, the cold water connection from the tank to the heater being adjacent the bottom of the tank and the hot water connection being adjacent the top of the tank. With ordinary city water, there deposits in the tank, the pipes and the heater, a sediment and encrusting scale. These deposits gradually increase in size until the pipes are nearly, if not entirely, closed, thereby decreasing the efficiency of such apparatus and impairing the quality of the water delivered thereby.

While tanks or boilers of this general type have been provided with drain valves, there has been no means provided, so far as I am aware, for producing what may be termed a pressure flow in a direction opposite to the normal circulation. Such a pressure flow is highly effective for removing such deposits from the apparatus and the present invention provides a construction whereby such a flow is insured.

A further objection to apparatus of this type as generally used, has been the absence of any means for effectively cleaning the circulating pipes.

The present invention has for its object the elimination of the difficulties encountered with such installations by the provision of easily operable means effective for cleaning the entire apparatus, including the circulating pipes.

The foregoing and other objects of the present invention, together with their attendant advantages, will be apparent as the invention becomes better understood by reference to the accompanying specification and drawings forming a part thereof, it being premised that changes may be made in the details of construction and manner of operation without departing from the scope of my invention.

Figure 1 is a side elevation largely diagrammatic of an installation embodying the present invention:

Figure 2 is a top plan view of the drain valve and its circulating connections;

Figure 3 is a sectional view on the line III—III of Figure 2;

Figure 4 is a sectional view on the line IV—IV of Figure 3; and

Figure 5 is a perspective view of the valve gate.

Referring more particularly to Figure 1 of the drawings there is illustrated a water circulating system comprising a storage tank 2, having a cold water inlet connection 3. Leading from a point adjacent the bottom of the tank 2 is a circulating connection 4 for delivering cold water to a heater 5. The heated water passes from the heater by way of a connection 6 into the upper portion of the tank 2 or to a hot water service connection 7.

Any usual gas supply connection 8 for the heater 5 may be provided.

In accordance with the present invention there is provided in the circulating connection 4 a drain valve 9 which may be termed generally a three-way valve. This valve, in its preferred embodiment, comprises a casing of any desired construction having two ports 10 and 11, preferably in alignment. During different periods of operation, these ports serve either as inlet or as outlet ports, according to the manner of installing the valve and the operative position thereof. The ports are adapted to receive the circulating connection 4. Intermediate the ports 10 and 11 is a gate valve comprising a spool-shaped body 12, the two heads of which are connected by a gate 13 having a relief opening 14 extending therethrough. Projecting upwardly from one of the heads is an operating stem 15 adapted to pass through a bearing 16 in the valve casing. At its upper end the valve stem may be provided with a squared portion 17 to receive an operating handle 18. The upper end of the valve stem is also preferably provided with an indicating mark or groove 19 extending diametrically thereof in alignment with the gate 13 for indicating the position thereof.

The valve body is inserted through a bottom opening in the valve casing. This opening is normally closed by a plug 20 having a recess adapted to partially enclose and guide a compression spring 21 serving to

hold the valve body in its upper position and compensate for wear thereof. To prevent leakage around the valve stem, the valve casing is recessed concentrically to the bearing 16 to receive a packing washer 22. When the parts are in assembled position the packing washer is entirely enclosed by one of the heads of the valve body and the valve casing.

Opening through the valve casing at substantially right angles to the axis of the ports 10 and 11, is a port 23 serving as a drain opening. This port may receive an ordinary valve 24, whereby the same may be opened or closed at will. This valve constitutes what may be termed an operating valve and cooperates with the three-way valve whereby the desired operation thereof may be secured.

The valve casing may be provided with a groove 25 extending diametrically from opposite sides of the bearing 16 and adapted to cooperate with a spring pressed centering device 26 carried by the handle 18 for indicating when the gate 13 is in its open or intermediate position illustrated in full lines in the drawings, and tending to maintain the same against accidental displacement from such position. The casing is also provided with stops 27 projecting therefrom and adapted to cooperate with a projection 28 formed on the handle 18 and extending downwardly therefrom. These stops and the projection 28 are so formed that the handle may be moved from neutral position through substantially 45° in either direction therefrom. At the same time, by removing the fastening screw 29 the handle may be reversed, if desired, to bring the projection into cooperative position between the stops 30, corresponding in function to the stops 27.

Assuming the parts in the position illustrated in Figure 2, cold water will flow from the tank 2 in to the heater 5. If it is desired to clean the heater 5, the handle 18 will be turned in a counterclockwise direction, as viewed in Figure 2, to bring the projection 28 thereon into engagement with one of the stops 27. This will move the gate to the dotted line position illustrated in Figure 4, thereby cutting off communication between the ports 10 and 23, with the exception of the relief opening 14, and establishing communication between the ports 11 and 23. The operating valve 24 will also be opened. This will permit the head of water in the heater and pipe 6 to produce a pressure flow through the heater, the pipe 6 and the circulating connection 4 in a direction opposite to the normal circulation therethrough. This reverse pressure flow will be effective for removing from these parts of the apparatus any sediment or encrustation. It will be apparent, that if it is desired to clean the tank 2 the operating valve 24 will first be opened and then the handle 18 will be moved in a clockwise direction. This operation may be repeated once or twice a week, or as found necessary, depending upon the quality of the water being used, and the valve permitted to remain in each position until a flow of clear water therethrough is produced. The entire circulating system, including the service pipe, may effectively be drained and cleaned as desired. The provision of the relief opening 14 prevents damage in case the gate 13 is accidently permitted to remain in one of its angular positions. For example, if left in the dotted line position illustrated in Figure 4, it will be apparent that supply water may pass from the tank 2 to the heater. While such supply will not be sufficient to take care of a large demand, it will prevent overheating or blowing up of the apparatus.

The advantages of the present invention arise from the provision of a water treating apparatus and three-way valve capable of permitting a thorough draining of apparatus of this general type.

I claim:

1. In a three-way valve, a casing, a gate valve, a reversible handle for operating said gate valve, means for indicating the position of said gate valve, and means cooperating with said handle in either position to limit the movement thereof, substantially as described.

2. In a drain valve, a casing having service ports and a drain port, and a gate valve rotatable through substantially 90° to establish communication between said service ports or between either service port and the drain port, said drain port being adapted to cooperate with an independently operable means for controlling the flow therethrough, substantially as described.

3. In a drain valve, a casing having service ports and a drain port, and means rotatable through substantially 90° to establish communication between said service port and the drain port, said means having a relief opening therethrough, said drain port being adapted to cooperate with an independently operable means for controlling the flow therethrough, substantially as described.

4. In a drain valve, a casing having service ports and a drain port, said drain port being adapted to cooperate with an independently operable means for controlling the flow therethrough, a gate valve cooperating therewith, a stem projecting from said gate valve, an operating handle secured to said stem, and a packing surrounding said stem and enclosed by said valve and said casing, substantially as described.

5. In a three-way valve, a casing having

service ports and a drain port, a valve cooperating therewith, resilient means cooperating with said valve to compensate for wear thereof and maintaining the same in proper position, an operating handle for said valve, and stops cooperating with said handle, said stops being arranged to permit movement of said valve through substantially 90° to bring the same into any one of three operating positions, substantially as described.

6. In water treating apparatus, a tank, a heater, circulating connections therebetween, and a three-way valve in one of said connections, said valve comprising a casing, a rotatable member having cylindrical heads of equal diameter, and a diametrically extending gate connecting said heads, said gate having a relief opening extending therethrough, substantially as described.

7. In a valve, a casing, a valve member rotatable therein and comprising cylindrical heads of substantially equal diameter, and a gate extending substantially diametrically of and connecting said heads, substantially as described.

8. In a valve, a casing, a valve member rotatable therein and comprising cylindrical heads of substantially equal diameter, and a gate extending substantially diametrically of and connecting said heads, said gate having a relief opening extending therethrough, substantially as described.

9. In a water treating apparatus, a tank, a heater, circulating connections therebetween, a valve in one of said connections adapted to normally permit a relatively free flow therethrough, and means for turning said valve in one direction to drain water from one side thereof and in the opposite direction to drain water from the opposite side thereof, whereby a pressure flow may be produced from said tank to said valve or from said heater to said valve, said valve having a relief opening formed therein and extending therethrough to permit a flow from the tank to the heater in the normal direction irrespective of the position of the valve, substantially as described.

10. In water treating apparatus, a tank, a heater, circulating connections therebetween, a valve located in one of said connections and adapted to occupy any one of three different operative positions, and means for rotating said valve, rotation of said valve through substantially 90 degrees only being effective to bring the same into any one of said three positions, said valve having a relief opening formed therein and extending therethrough, substantially as described.

11. In a drain valve, a casing having service ports and a drain port, and rotatable means effective upon rotation through substantially 90 degrees only to establish communication between said service ports to permit direct flow therebetween, or between either service port only and the drain port, substantially as described.

12. In a drain valve, a casing having service ports and a drain port, and rotatable means effective upon rotation through substantially 90 degrees only to establish communication between said service ports and permit direct flow therebetween, or between either service port and the drain port, said means having a relief opening formed therein and extending therethrough, substantially as described.

13. In water treating apparatus, a tank, a heater, circulating connections therebetween, and a three-way valve in one of said connections, said valve having a constantly open relief opening formed therein and extending therethrough, said opening permitting a flow from the tank to the heater in the normal direction irrespective of the position of the valve, substantially as described.

14. In water treating apparatus, a tank, a heater, circulating connections therebetween, and draining means in one of said connections, said means having a constantly open relief opening formed therein and extending therethrough for permitting a flow from the tank to the heater in the normal direction irrespective of the position of the draining means, substantially as described.

In testimony whereof I have hereunto set my hand.

FREDERICK W. ROBERTSHAW.