Feb. 6, 1968 W. J. O'KEEFE 3,367,325

AIR CONCENTRATING, DISTRIBUTING AND BATH WATER BUBBLING DEVICE

Filed April 8, 1965

Fig. 3

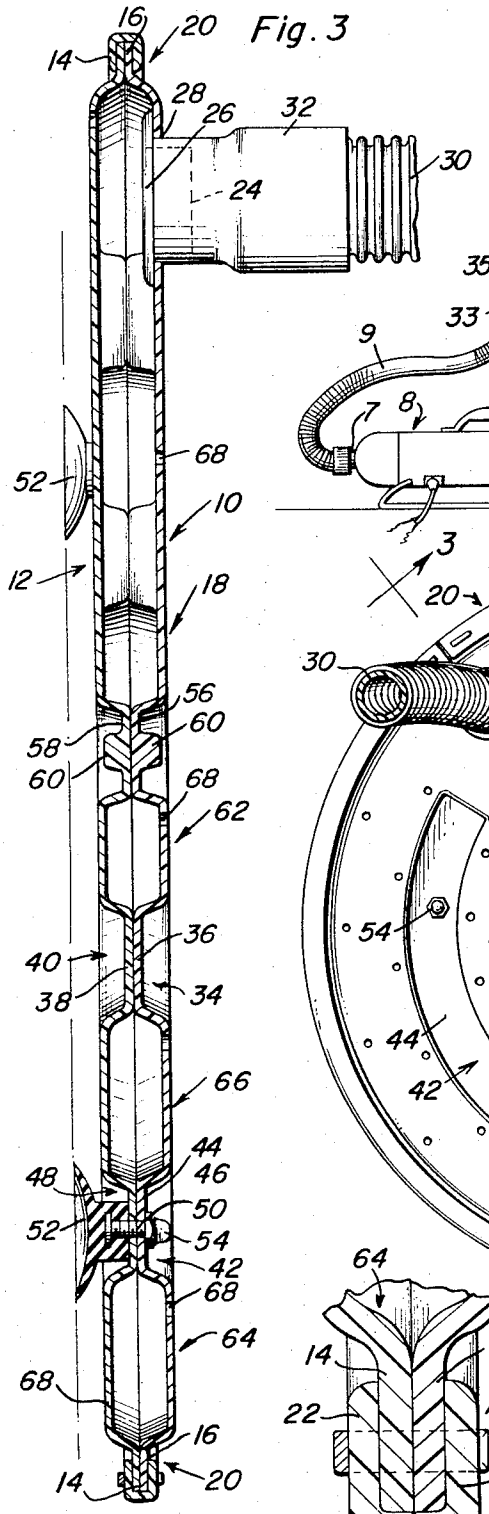

Fig. 1

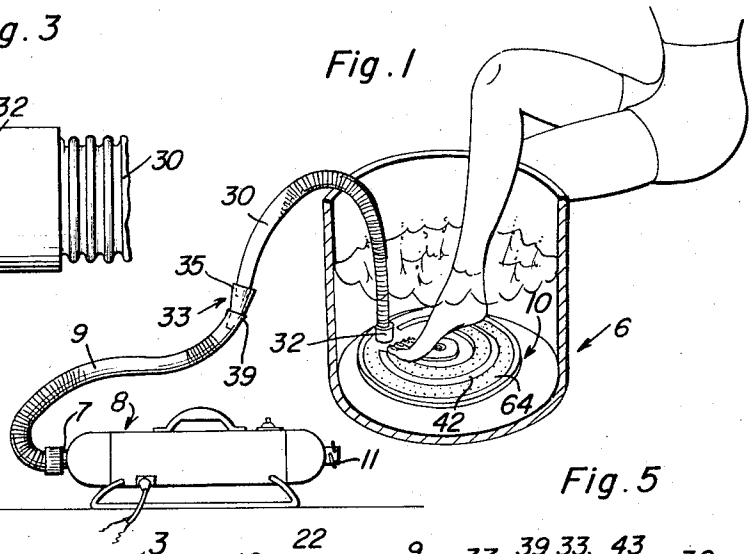

Fig. 5

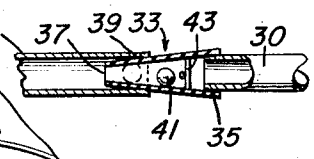

Fig. 2

Fig. 4

William J. O'Keefe

INVENTOR.

BY Clarence A. O'Brien and Harvey B. Jacobson

Attorneys

United States Patent Office

3,367,325

Patented Feb. 6, 1968

3,367,325

AIR CONCENTRATING, DISTRIBUTING AND BATH WATER BUBBLING DEVICE

William J. O'Keefe, Palos Verdes, Calif.
(P.O. Box 3593, Torrance, Calif. 90500)

Filed Apr. 8, 1965, Ser. No. 446,526
5 Claims. (Cl. 128—66)

ABSTRACT OF THE DISCLOSURE

The above designated appliance has to do with a portable multipurpose air concentrating and distributing pad which functions to turbulate water within the confines of tub, bucket, or suitable container. It is basically a bubbler and is submerged in warm water to afford the user comforting relaxation, relief from aching and painful feet and other pains where one's doctor recommends water turbulation or therapy as a treatment. It is made of space age plastics, more specifically, is molded in a heat injection power press. It has a replaceable air delivery hose, is powered from the exhaust side of conventional home-type vacuum cleaners and can be used with almost all makes of vacuum cleaners on today's market. Merely detach the usual vacuum hose, transfer it to and connect it with the discharge neck of the vacuum cleaner. Then, connect the valved funnel-equipped end of the air intake and delivery hose to the vacuum cleaner hose and use in the manner illustrated in FIG. 1.

This invention relates, broadly construed, to bath water circulating, agitating and aerating appliances and devices such as are designed and structurally adapted for use in a bath tub but has to do, more particularly, with a specially constructed pad-like appliance which is unique in that it embodies and features significantly new and highly useful improvements which effectively serve the purpose for which they are adapted.

The broad objective of the instant invention is to structurally, functionally and in other significant ways improve upon similarly constructed and performing prior art adaptations and, in so doing, to provide an innovation which is simple, practical and economical from the standpoint of producers and consumers, is by no means restricted for use in one's bath tub, and is feasible for comforting use by human beings and also for certain animals, for example, when bathing and defleaing dogs, for soaking sore and swollen horse's legs in a horse leg tank, and so on.

While the multipurpose aspect of the concept (for human beings and animals, too) is of the utmost in importance, it is nevertheless a matter of importance to take into account the fact that the paramount aim of this invention is to enable adults and children to take an invigorating and stimulating home bath in the family tub. Of equal importance is the fact that the invention, referred to basically as a bubbler, lends itself to more acceptable use in a small portable tub whereby to enable the user to relax the feet and legs while, for example, watching TV. It will be appreciated, in this connection, that when the bubbler is submerged in the bubbling aerated water, particularly if it is nice and warm, it affords the user comforting relaxation, relief from aching and painful feet, and promotes a feeling of well being.

In carrying out a preferred embodiment of the invention a relatively thin but highly strong and durable pad is provided. It preferably is circular or disk-like in plan, is some 14 inches more or less in diameter and versatile in that it is capable of being inserted and used in a 15 inch water bucket, a portable foot tub, equivalent and amply deep vessel, as well as in the bottom of a stationary bath tub. It follows that with the aid of this invention and

due to the fact that the bubbler blows air through hot water and generates body heat, it can be effectually used to enable one to "sweat out" excessive body fluids. Then, too, and keeping in mind the bubbling and whirling water, when the device is used in the bath it assists in cleansing the skin, promotes blood circulation, and when aromatic products are mixed with the bath water, it enables the bather to emerge with that ever-desired sense of well being. As a matter of fact, as experience has shown, by adding soap of any kind and providing sudsy bubbling water, children have been known to ask for rather than refuse a bath.

While the invention achieves and results generally comparable to more complex and so-called hydrotherapy appliances, it has been recommended, even by doctors, to provide confined water turbulation, simple therapeutic results and satisfaction to the user.

Further and by adding minerals to one's bath water and utilizing the bubbler and aerator the user can efficaciously cleanse the pores and in this manner obtain the benefits of a home mineral bath.

In the case of riding horses and race horses experience has shown that a brine treatment aided by the resultful bubbling and aeration is significantly helpful and with this aim in mind the pad, being made of a special grade of plastic material, is possessed of durability and strength such that a horse can stand on the pad without risking a break or rupture.

Of equal and highly important significance is the fact that the invention is not only small, lightweight and aptly suitable in serving the purposes for which it has been devised, it is an innovation in that it is powered from the exhaust side of a conventional or home-type vacuum cleaner. It can be adapted to virtually all marketed makes of vacuum cleaners keeping in mind, however, that it is necessary to attach the intake end of the air delivery or supply hose to the blower end only of the vacuum cleaner.

To the end desired, the user can simply detach the vacuum hose from the usual suction neck, transfer it to and connect it with the blower or discharge neck and then, with the aid of a ball-valved funnel-type coupling, can couple adjacent ends of the two hoses together in a manner to attain the aerating and bubbling action desired.

It is of importance to note that my bubbler is unique in that the construction is such that it concentrates the forces of air at the axial center or hub region where it functions to direct the highest turbulence of water on any part of the bady merely by adjustably shifting and moving the pad to the most desirable position in the water container. It is versatile in the sense that it can be used in a foot tub with the utmost of efficiency. It is compact for travelling, which is not feasible or practicable with expensive complex prior art adaptations, most of which are designed to turbulate the water evenly over the entire surface of the tub. Accordingly, it well serves the many purposes for which it has been designed and effectually used.

These together with other objects and advantages which will become subsequently apparent reside in the details of construction and operation as more fully hereinafter described and claimed, reference being had to the accompanying drawing forming a part hereof, wherein like numerals refer to like parts throughout, and in which:

FIGURE 1 is a view in perspective showing a foot bath tub or an equivalent foot bathing vessel in section and showing, what is more significant, how the air intake hose is coupled (with the aid of the vacuum hose) to the blower end of a conventional vacuum cleaner;

FIGURE 2 is an enlarged top plan view of the pad by itself with the major portion of the pressurized air intake or supply hose omitted;

FIGURE 3 is a view which is further enlarged and taken upon the plane of the section line 3—3 of FIGURE 2 looking in the direction of the arrows;

FIGURE 4 is a still further enlarged but fragmentary view which details the marginal flanges and rim construction; and

FIGURE 5 is a detail view, in section and elevation, of the discharge end of the vacuum hose, intake end of the appliance or bubbler hose, and optional valved coupling between the oriented ends of the two hoses.

Referring to FIG. 1 the reference numeral 6 designates a tub, vessel or container. This aspect of the overall concept is to be interpreted as covering not only as a foot bath tub but a bucket or similar receptacle, a regular stationary bath tub, a bath tub such as is specially used for pets such as dogs, and a horse leg tub (not shown). The power source is located on the outside of the tub. It comprises an ordinary vacuum cleaner 8. The user simply purchases the appliance, takes it home and uses it in conjunction with a suitable tub and vacuum cleaner in the manner shown. Approximately 99% of the vacuum cleaners now on the market can be used with this invention. It will be clear therefore that the invention has been repeatedly and experimentally used. In fact, it has proved out to be quite efficient and satisfactory as can be appreciated.

The invention has to do with a readily insertable and removable bubbler, more specifically, a substantially disk-like or circular pad denoted as a whole by the numeral 10 in FIG. 2. This pad comprises a circular bottom member or component 12 provided around its outer marginal edge with an endless annular assembling and retaining flange 14 (FIG. 4). This flange corresponds to and is in abutting and oriented relationship with a companion flange 16 which latter is the outer peripheral portion of the circular or disk-like top section or member 18. Readily applicable and removable assembling, clamping and sealing means is provided to maintain these two members in opposed confronting and cooperative relationship, the means comprising a substantially endless slightly elastic rim 20 which as shown in FIG. 4 is mounted on and clamped over and around the two flanges. This is to say the flange portions 22 of the channel fit over the flanges 14 and 16, bind them together, and provide the desired assembled and sealing result.

It will be evident that the principal top and bottom surfaces of the base member 12 and cover member 8 are substantially flat and in appropriate coplanar relationship to provide for the desired manner of anchorage and use in whatever tub is to be employed and to provide generally smooth surfaces for the user whether sitting with the feet thereon as suggested in FIG. 1 or standing, or otherwise using the device simply as a water bubbler in a full-size stationary bath tub. The cover member 18 is provided adjacent the periphery, that is eccentrically and toward one out-of-the-way side with an appropriate attaching neck 24 having flange means 26 mounting it in an appropriately apertured portion 28 of said cover section. An appropriate flexible corrugated or accordion-type air intake hose 30 is provided at one end with a coupling 32 which in turn is operatively connected with the pressurized air introducing neck 24. An adapter 33 (FIG. 1) is provided at the air intake end of the hose 30 and is intended to be communicatively connected with the blower end 7 of the vacuum cleaner 8 by way of the vacuum hose 9, that is, when the device is being used as illustrated in FIG. 1.

It will be noted that the two component parts or members 12 and 18 are substantially alike in construction. As presently engineered and used the sectional bubbler is made of a highly satisfactory and acceptable grade of commercial plastics, for example, space age corrosion resistant plastic material known in the plastic industry as polyallomer. It follows that the members 12 and 18 are of approximate duplicate construction and are die-molded to prerequisite shape and form with the aid of a heat injection power press. This material is exceedingly tough and durable and in spite of the fact that it is light in weight it has repeatedly shown that a horse can stand on it without fear of either of the two members giving way, crushing or breaking. This plastic has great strength and durability and is substantially new on the market. It is not possible to make it into flat sheets and then make a simple inexpensive die to reheat and reform it (as is done with many other kinds of plastics) and for this reason the process of production involves injection molding. This means that it is necessary in practice to make a die which in turn is mounted in a large press designed for this purpose. The special formula consists of dry plastic granules which are then heated in the machine and supplied through a hopper (not shown) on top of the machine (not shown). The heat is intense and causes the plastic to become thickly formed which is then forced through an injection nozzle into the die and then immediately cooled by water, this practice and operation being referred to in the trade as a "shot." The die opens automatically and the operator removes the finished part, this being only one of the two components after which both components are assembled to provide the finished bubbler or product.

Not only does the device involve disk-like base and cover members 12 and 18 flanged and joined by rimming and clamping means, these members are of unique configuration or design. It will be noted, for example, that the central portion of the cover member 18 is provided with a substantially C-shaped indentation or depression 34 having a flat bottom 36 which is superimposed upon and bears firmly against the flat bottomed or surface portion 38 of the corresponding C-shaped depression 40 in the bottom or base section 12. A concentric outer and larger C-shaped depression 42 with a flat bottom 44 is provided also in the top member and registers with 46, the flat bottomed portion of the depression 48 in the bottom section 12. The coating surfaces 44 and 48 are apertured to permit passage therethrough of a screw-threaded stud or bolt 50 which is carried by the stem on the rubber suction cup 52 so as to permit the nut 54 to be applied and to thus assist in holding the two sections together and also to aid the aforementioned rim 20 in assembling and clamping the sections. In addition to these C-shaped depressions 34 and 42 it will also be noted that generally circular depressions denoted at 56 and 58 are provided at the axial center of the over-all device, these portions having top and bottom axially alined protuberances 60 thereon which constitute reinforcing buttons. All of these depressions, the ones at the center and the two C-shaped ones constitute wells. The remaining portions of the two sections have embossed channel-shaped portions, one denoted at the center as at 62 (FIG. 2), an outer one 64 and an intervening one 66. All of these embossed portions are channel-shaped and constitute ribs. The portions in the bottom are denoted by the same reference numerals as those in the top to simplify the description and to bring out the fact that the open sides of these respective embossed ribs register with each other and provide air circulating and distributing ducts or channels. Then, too, the rib-like or embossed ducts are provided with a multiplicity of apertures which are suitably arranged and provide air expelling orifices all of which are denoted by the numeral 68. It will be evident, therefore, that the air under pressure entering the hollow portions (ducts or channels) by way of the hose 30 and neck 24 is circulated around and distributed and the air jets are forcibly expelled through the top and bottom orifices 68 in a manner to agitate and whirl the surrounding water and thus achieving the swirling as well as aeration result.

The plastic components are not only advantageous from the standpoint of mass production and handling, the material used is capable of being produced in a colorful

manner. For example, and in practice the top or cover disk **18** is blue while the bottom disk **12** is white and transparent. These features lend not only to merchandising appeal but facilitate achieving the result that when sediment accumulates in the hollow chambers or channels it is possible to snap off and remove the channel rim **20**, remove the suction cups **52**, and then separate and boil the component parts in hot water. They can later be readily and reliably reassembled for sanitized performance.

With further reference to FIG. 5, it will be noted that the adapter **33** comprises a truncated cone or, alternatively, a rubber or plastic funnel-shaped coupling whose large end **35** telescopically receives the pressurized air intake end of the bubbler hose **30**. The connection between the hose **30** and funnel **33** may be separable or permanent. In any event, the small end **37** is telescoped by hand and frictionally fitted into the coacting end **39** of hose **9**, thus communicatively joining the appliance or bubbler hose **30** to the vacuum cleaner hose **9**. To the ends desired, a ball check valve **41** of suitable size is located in the funnel or coupling between the valving end **37** and an internal spider or equivalent ball valve retainer **43**. It follows that when the vacuum cleaner **8**, bubbler appliance **10** and hoses **9** and **30** are rigged and hooked up in the manner shown in FIG. 1, the result desired is properly achieved. On the other hand, if the user inadvertently fails to follow the printed instructions for use (not given here) and mistakingly plugs the adapter **33** into the suction neck **11** (at the right in FIG. 1), the ball valve **41** will close automatically and preveint water from accidentally, flushing into and damaging the vacuum cleaner's motor (not shown). Accordingly, this valved adapter **33** provides an optional safety device.

The foregoing is considered as illustrative only of the principles of the invention. Further, since numerous modifications and changes will readily occur to those skilled in the art, it is not desired to limit the invention to the exact construction and operation shown and described, and accordingly all suitable modifications and equivalents may be resorted to, falling within the scope of the invention as claimed.

What is claimed as new is as follows:

1. A portable air concentrating and distributing device for pressurized air delivered thereto from an independent air pressurizing source and adapted to agitate, bubble and aerate bath water confined, for example, in a tub, bucket or suitable portable container, said device comprising: a foot pad embodying a base member and a complemental cover member oriented and aligned with each other and having coordinating outer marginal flanges matching and superimposed one upon the other and separably united by manually applicable and removable connecting, assembly and sealing means, said members being perforated, the perforations therein being distributively located and ranging from the central hub portion to the outer marginal portions and concentrating the force of air providing orifices by way of which the trapped and concentrated air is expelled and allowed to forcibly gush out in the form of water agitating, swirling and aerating jets, pad positioning and holddown means, said pad being made of lightweight, strong and durable material which while slightly yieldable when stood upon is substantially crushproof, regardless of the amount of weight and pressure imposed thereon when used in the ways contemplated, said members being made of tough, space age, corrosion resistance polyallomer, for example, said members being approximate duplicates one of the other and die molded to assume requisite shape and form in a heat injection power press, said base member being transparent so that the user, having observed accumulated sediment trapped therein can remove the flange connecting means, dismantle the device, scald it in boiling water and subsequently reassemble the sanitized parts for use, each member comprising a disk-like plate, certain portions of said plates having flat-bottomed depressions defining trough-like wells, the respective flat bottoms being superimposed on each other, and said pad holddown means comprising suction cups located beneath and below the plane of the base member and provided with attaching bolts passing upwardly through certain portions of said flat bottoms and assisting in assembling and retaining the cover member atop the base member.

2. The structure according to claim **1**, and wherein at least two trough-like depressions are provided, said depressions being approximately C-shaped in plan, one being at the central zone, the other one radially outwardly thereof, concentric therewith and radially inwardly of said marginal flanges.

3. A portable air concentrating and distributing device for pressurized air delivered thereto from an independent air pressurizing source and adapted to agitate, bubble and aerate bath water confined, for example, in a tub, bucket or suitable portable container, said device comprising a foot pad embodying a first disk-like plate having embossed channel-shaped portions and intervening trough-like depressions, the web portions of said embossed portions being flat and in a common plane and adapted to reside flatwise atop the bottom of a tub or similar container, the outer marginal edge having an endless annular flange, a second disk-like plate of a diameter corresponding to said first plate and also having embossed channel-shaped portions and intervening flat-bottom trough-like depressions registering with said first-named depressions with the flat bottoms thereof superimposed upon the flat bottoms of said first-named depressions, and further provided with channel-shaped embossed portions having their open channel sides aligned with the first-named embossed portions and oriented and cooperating therewith in defining and providing hollow air circulating and distributing ducts, all of the web portions being highly perforated and providing air discharging orifices, said second plate having a marginal flange corresponding with said first-named flange and superimposed thereon, said second plate providing a cover for the first plate and having an air intake neck for an air supply hose, elastic rim means assembling and connecting said flanges in coordinating and functioning relationship, said plates being made of injection molded plastic material, said base plate being transparent and provided with depending suction cups having screw-threaded bolting studs passing upwardly through certain portions of the flat bottoms of the respective depressions and provided with accessible retaining nuts and separably joining the two plates together, and a hose having a coupling at one end connected to said neck, said hose being adapted for connection at its other end to the exhaust or blower end of a household-type vacuum cleaner.

4. The structure according to claim **3**, and, in combination, an elastic accident-preventing funnel-shaped adapter operatively mounted on the air intake end of said hose, said adapter being provided interiorly with a self-contained suction-closed ballcheck valve.

5. An air concentrating distributing and water bubbling device comprising: a portable foot pad embodying a disk-like base member and a substantially duplicate disk-like cover member oriented and aligned with each other and having outer marginal annular flanges of identical diameter superimposed one upon the other and separably united by manually applicable and removable flange connecting, assembling and water-tight sealing means, said means comprising an elastic endless annular channel-shaped rim retentively but removably fitted over and clamping the respective flanges together, said members having embossed channel-shaped portions which are perforated, the perforations being distributively located and ranging from the axial central hub portions to the outer marginal flanges and concentrating the forces of air and providing concentric rings of perforations by way of which the trapped and concentrated air is expelled and allowed to forcibly gush out in a manner to agitate, bubble and aerate water

which is being confined in a tub, bucket or a portable container, said pad being made of tough lightweight crush-proof, space age, corrosion resistant polyallomer, said member being die molded to assume requisite shape in a heat injection power press, said base member being transparent so that the user, having observed sediment trapped therein can detach said flange connecting and sealing means, dismantle the device, scald it in boiling water and subsequently reassemble the then sanitized components for use, each member comprising a plate, certain portions of said plates having flat-bottomed depressions defining trough-like wells, the respective cooperating flat bottoms being superimposed on each other, pad holddown suction cups located beneath and below the plane of the base member and provided with attaching and retaining bolts passing upwardly through certain portions of said cooperating flat bottoms and assisting said flange connecting, assembling and water-tight sealing means in retaining the

cover member atop the base member, said cover member having an air intake neck for an air intake and supply hose, and a hose having a coupling at one end communicatively connected with said neck, the other end of said hose being adapted for temporary connection to the blower end of a conventional-type household vacuum cleaner.

References Cited

UNITED STATES PATENTS

2,663,178	12/1953	Schwartz.	
2,719,307	10/1955	Reid	4—180
3,088,459	5/1963	Rabinoff	128—66
3,240,208	3/1966	Everston	128—66
3,299,885	1/1967	Wessel	128—66

L. W. TRAPP, *Primary Examiner.*