United States Patent [19]

Collins

[11] **3,915,539**

[45] **Oct. 28, 1975**

[54] **COAXIAL CONNECTORS**

[75] Inventor: **Brian Stuart Collins,** Rochester, England

[73] Assignee: **C & S. Antennas Limited,** Rochester, England

[22] Filed: **May 31, 1974**

[21] Appl. No.: **474,982**

Related U.S. Application Data

[63] Continuation of Ser. No. 254,151, May 17, 1972, abandoned.

[30] **Foreign Application Priority Data**

May 20, 1971 United Kingdom 16106/71

[52] **U.S. Cl.** ..... **339/94 C;** 339/177 E

[51] **Int. Cl.**[2] **H01R 7/02**

[58] **Field of Search** ..... 339/48, 49 R, 49 B, 92 R, 339/92 M, 94 C, 177 RE

[56] **References Cited**

UNITED STATES PATENTS

2,955,148	10/1960	Graham	339/177 R
3,245,028	4/1966	Badger	339/48
3,363,221	1/1968	Stark	339/177 E
3,428,739	2/1969	Jackson	339/177 R

Primary Examiner—Roy Lake
Assistant Examiner—Mark S. Bicks
Attorney, Agent, or Firm—William R. Woodward

[57] **ABSTRACT**

In a coaxial connector, the outer shell and back nut are injection mouldings of synthetic, non-conductive material. A metal sleeve in the shell provides electrical continuity for the outer conductor. The end of the sleeve projects slightly to abut and make connection to the outer conductor of a second, mating connector. This end of the sleeve is sealed against moisture by a surrounding O-ring clamped between the two connectors.

3 Claims, 1 Drawing Figure

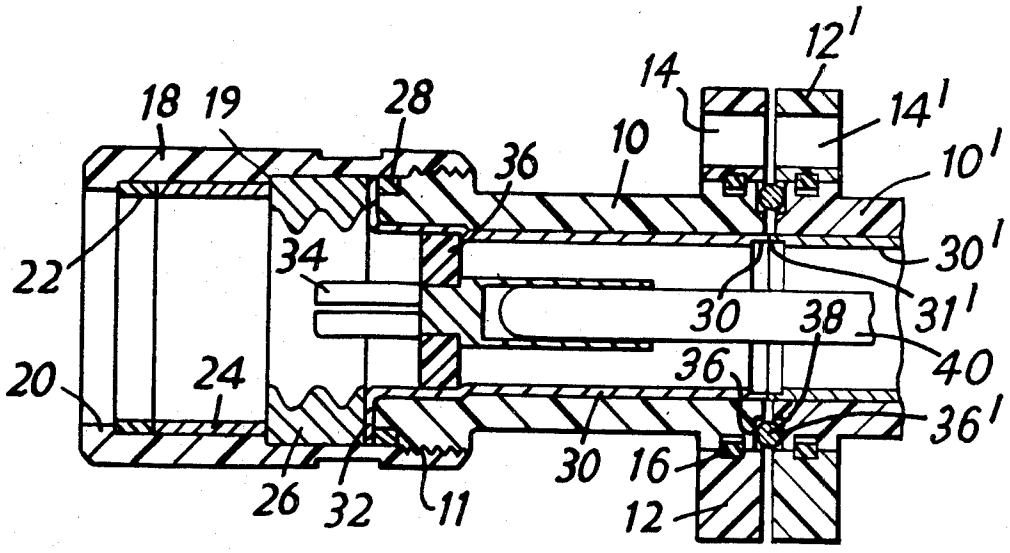

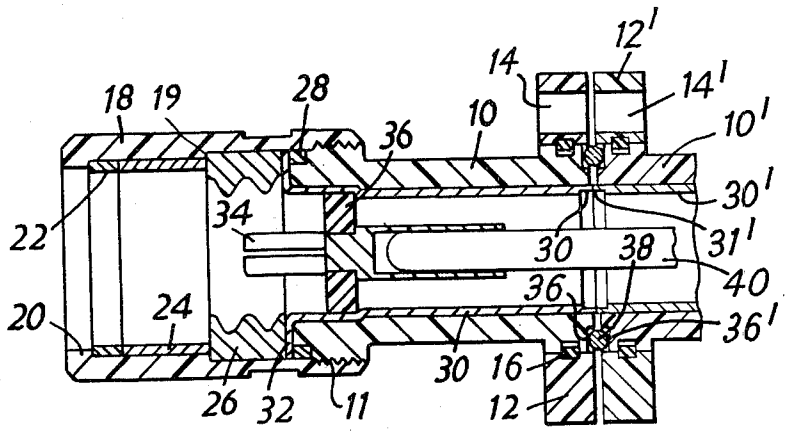
12'
14
14'
18
19
28
36
10
10'
30'
22
34
30
31'
38
40
36
20
24
36'
30
16
26
32
11
12

COAXIAL CONNECTORS

This is a continuation of application Ser. No. 254,151, filed May 17, 1972, and now abandoned.

This invention relates to coaxial connectors. Coaxial connectors are ever more frequently being employed in modern communications applications, and much effort has been directed to the production of reliable connectors at minimum cost. However, to provide for an electrical connection for the outer conductor, conventional connectors are largely fabricated from conductive metals such as aluminium or brass and are therefore inherently expensive, since these starting materials are expensive and their processing (for example by machine turning) is also expensive.

With the object of cheapening manufacture, coaxial connectors have already been proposed in which the main body is made from a synthetic plastics material and a conductive path for the outer conductor of the cable is provided by a metallized coating on the main body or by a thin metal liner.

A problem which is encountered with heavy duty connectors used in all different kinds of environments is that of metal corrosion, which is encouraged when dissimilar metals are in contact.

The object of this invention is to provide a connector which overcomes the problem of corrosion.

According to the present invention, there is provided a coaxial connector comprising an outer shell terminating in a flange for attaching the connector to another connector, a contact element for the inner conductor of a coaxial cable supported by a dielectric body within the outer shell, the outer shell being formed from a moulded synthetic, non-conductive material and lined by a metal sleeve forming a conductive path for the outer conductor of the cable, the sleeve projecting slightly with respect to the end surface of the shell at the flange end, and sealing means providing a watertight seal for the interior of the connector except in the vicinity of the flange.

In use, the connector is attached to another connector by means of a flange and a sealing ring is compressed between the flange and the other connector around the projecting end of the metal sleeve. This measure, in conjunction with the aforesaid sealing means, ensures that the conductive parts of the connector are completely sealed off inside the synthetic material and problems of corrosion are thereby avoided.

The invention will be described, by way of example, with reference to the sole FIGURE of the accompanying drawing, which is a cross-section of one connector and part of a second connector attached thereto.

The connector illustrated comprises a tubular body shell **10** which carries at one end a flange **12** which is provided with three fixing holes **14.** The flange is rotatably mounted on the body by means of a snap ring **16.** The other end of the shell **10** is externally threaded at **11** to receive a tubular back nut **18.** The further end of the back nut **18** is directed inwards to form an abutment **20** which bears against a thrust ring **22** which in turn presses against a rubber sealing ring **24.** An internal shoulder **19** of the back nut **18** bears on an internally threaded collar **26** and the ring **24** also bears on this collar. Rotation of the back nut **18** thus applies pressure to the internally threaded collar **26.** The collar **26** is chosen to suit the external conductor of the cable to which the connector member is connected, which in

this case is assumed to have an Edison thread on its outer surface. Spanner flats (not shown) can be provided on the outside of the body shell **10** to assist the relative rotation of back nut and shell.

A conducting metal sleeve **30** is provided within the shell **10** and is flanged at the end nearer the back nut **18.** The flange **32** is clamped between the collar **26** and the end surface of the shell **10.** A sealing ring **28** is housed in a groove at the end of the shell **10** between this shell and the flange **32.** The other end **31** of the sleeve **30** stands very slightly proud of the surface of the flange **14** to ensure a positive electrical connection at this point, by abutment with the corresponding sleeve **30'** of a second connector. The sleeve **30** can be made by metal spinning or deep drawing.

In use the connector member is attached to a coaxial cable as follows. The back nut **18** is placed over the end of the cable and suitable thrust and sealing rings **22** and **24** respectively are chosen with an internal diameter equal to the external diameter of the outer sheath of the cable, or of the bared outer conductor. The bared outer conductor of the cable is screwed into the threaded collar **26** until it protrudes from the further side, and the protruding portion is then turned outwards to form a flange. The back nut assembly is screwed on to the body shell **10** with the flange formed by the outer conductor bearing against the flange **32** on the sleeve **30** to provide a positive electrical connection between the outer conductor of the cable and the sleeve.

The central conductor of the cable engages with an inner contact element **34** which is supported within the body member **10** by a dielectric disc **36.** As shown the engagement is by means of a push fit, but it could alternatively be provided for, in a manner known per se, by a self-tapping thread on the left-hand portion of the element **34,** as seen in the FIGURE, there being a transverse bore through the right-hand portion of the element **34** to receive a tommy bar for screwing the contact element into the central conductor of the cable.

The shell **10** may have an aperture (not shown) in its wall by means of which dry gas can be introduced into the connector. The gas then circulates around an annular channel formed in the inner surface of the shell **10** and passes through a hole in the sleeve **30.** The provision of the annular channel avoids the necessity of aligning the holes in the shell **10** and the sleeve **30.**

The largest components are the shell **10** and the back nut **18,** and these are made of a synthetics plastics material, preferably glass-filled nylon. This has good ultraviolet resistance, especially if loaded by a suitable black pigment, good creep resistance and low water-absorption characteristics, and the shell **10** and nut **18** can be formed by injection moulding. In the connector illustrated the flange **12** is formed of the same material, and the collars **22** and **26** could be also. The use of plastics members for the major components means that the connector can be produced relatively cheaply.

The interior of the connector is completely sealed against the ingress of moisture. The cable entry is sealed by the rubber ring **24** compressed about the cable sheath, or about the bared outer conductor as may be preferable when the external diameter of the outer sheath varies within wide tolerances. To improve the efficiency of this seal we have found it advantageous to taper the outside of the ring **24,** the narrower

end being to the left in the drawing. The ring, in place on the cable, is then forced into the back nut after the manner of a rubber bung.

The joint between the shell **10** and the back nut **18** is sealed by the ring **28.** The only other place where moisture could reach the metal parts of the connector is at the projecting end **31** of the sleeve **30** at the leading end of the connector. To seal off this region, the leading end of the shell **10** has an annular groove **36** surrounding the sleeve end **31.** This groove faces the corresponding groove **36'** in the shell **10'** of the second connector and an O-ring **38** is housed between these grooves. When the flanges **12** and **12'** are clamped up by bolts (not shown) through the holes **14** and **14'**, the sleeve ends **31** and **31'** abut each other to provide electrical continuity through the sleeves **30** and **30'** and the O-ring **38** is compressed between the shells **10** and **10'** to complete the sealing of the connectors.

Connection between the contact element **34** and the corresponding element of the second connector is effected by a metal pin **40.**

The major components can be used with a variety of different cable types, thus enabling the advantages of mass production to be further realised. The rings **22** and **24** and collar **26** can be replaced by any suitable fixing appropriate to the cable to be used with the connector. For example, a plain collar can be used as opposed to a threaded one, or two clamping members having opposed frusto-conical surfaces can be employed. In all cases axial thrust generated by tightening the back nut **18** serves to clamp the outer conductor and form the seal around the conductor itself or the sheath thereof.

O-ring seals have been used in the past between the flanges of connectors. Although these have prevented water getting inside the connector they have not served to seal all metal parts inside the connector; in fact the O-rings have been between metal flanges. The known seals have not therefore helped to prevent corrosion between dissimilar metal parts which are inevitably present because of the use of cables with conductors of copper or aluminium. In the past it has been necessary to employ special barrier paints to overcome the problem of corrosion. This is a troublesome and unreliable method of dealing with the problem.

The embodiments of the invention in which an exclusive property or privilege is claimed are defined as follows:

1. A pair of coaxial cable connectors connected together, each comprising an outer shell terminating in a flange whereby the connector is attached to the other connector, a dielectric body within the outer shell, a contact element for the inner conductor of a coaxial cable supported by the dielectric body, the outer shell being formed from a moulded synthetic, non-conductive material, a metal sleeve lining the interior of the outer shell and forming a conductive path for the outer cable conductor, the sleeve projecting slightly with respect to the end surface of the shell at the flange end, the sleeve being itself unflanged at its projecting end, and sealing means at the end of the shell remote from the flange, said sealing means of the respective connectors together providing a watertight seal for the interior of the connector and preventing access of moisture to the metal sleeves except in the vicinity of the flange, said projecting ends of the two metal sleeves of the respective connectors abutting each other and providing electrical continuity through the sleeves, and a sealing ring clamped between the respective flanges of the two shells around the abutting ends of the sleeves to complete the watertight sealing of the connector and complete the prevention of the access of moisture to the metal sleeves.

2. A coaxial connector for a coaxial cable comprising an outer shell terminating in a flange for attaching the connector to another connector with interposition of a sealing ring, a dielectric body within the outer shell, a contact element for the inner conductor of a coaxial cable supported by the dielectric body, the outer shell being formed from a moulded synthetic, non-conductive material, a self-supporting metal sleeve of solid metal lining the interior of the outer shell and forming a conductive path for the outer conductor of the cable, the sleeve projecting axially slightly with respect to the end surface of the shell at the flange end for endwise abutment under pressure with the sleeve of a like connector, the projecting end of said sleeve being supported axially solely by said sleeve itself and being capable of withstanding a compressive load created by said endwise abutment under pressure, and sealing means at the end of the shell remote from the flange providing a watertight seal for the interior of the connector and preventing the access of moisture to the metal sleeve except in the vicinity of the flange, where a similar seal to complete the sealing of the connector is feasible upon attachment of the flange to another connector with interposition of a sealing ring.

3. A coaxial connector for a coaxial cable comprising an outer shell terminating in a flange for attaching the connector to another connector with interposition of a sealing ring, a dielectric body within the outer shell, a contact element for the inner conductor of a coaxial cable supported by the dielectric body, the outer shell being formed from a moulded synthetic, non-conductive material, a metal sleeve lining the interior of the outer shell and forming a conductive path for the outer conductor of the cable, the sleeve projecting slightly with respect to the end surface of the shell at the flange end for endwise abutment with the sleeve of a like connector, and sealing means providing a watertight seal for the interior of the connector and preventing the access of moisture to the metal sleeve, except in the vicinity of the flange, where a similar seal is feasible upon attachment of the flange to another connector,

said sealing means comprising a back nut threaded on the end of the shell remote from the flange, and sealing rings within the back nut, the back nut being adapted to compress the sealing rings around the cable, the end of the metal sleeve being flared out to overlay the end surface of the shell remote from the flange and a sealing ring being interposed between the flared out part of the sleeve and the shell.

* * * * *