US010356981B2

(12) **United States Patent**
Farley et al.

(10) **Patent No.: US 10,356,981 B2**
(45) **Date of Patent: Jul. 23, 2019**

(54) **AGRICULTURAL HEADER WITH CONSTANT REEL TO CUTTER RELATIONSHIP**

(71) Applicant: **CNH Industrial America LLC**, New Holland, PA (US)

(72) Inventors: **Herbert M. Farley**, Elizabethtown, PA (US); **Benjamin D. Kemmerer**, New Holland, PA (US)

(73) Assignee: **CNH Industrial America LLC**, New Holland, PA (US)

(*) Notice: Subject to any disclaimer, the term of this patent is extended or adjusted under 35 U.S.C. 154(b) by 120 days.

(21) Appl. No.: **15/705,692**

(22) Filed: **Sep. 15, 2017**

(65) **Prior Publication Data**

US 2019/0082603 A1 Mar. 21, 2019

(51) **Int. Cl.**

A01D 61/00	(2006.01)
A01D 34/04	(2006.01)
A01D 61/02	(2006.01)
A01D 41/14	(2006.01)

(52) **U.S. Cl.**

CPC ***A01D 61/008*** (2013.01); ***A01D 34/04*** (2013.01); ***A01D 61/02*** (2013.01); *A01D 41/14* (2013.01); *A01D 61/004* (2013.01)

(58) **Field of Classification Search**

CPC A01D 61/008; A01D 61/02; A01D 34/04; A01D 41/14; A01D 61/004; A01D 57/04; A01D 57/02

See application file for complete search history.

(56) **References Cited**

U.S. PATENT DOCUMENTS

882,969 A		3/1908	Rump	
1,729,868 A		10/1929	Eichelberger	
2,070,083 A		2/1937	Hume et al.	
2,077,018 A		4/1937	Schewe	
3,208,208 A		9/1965	Schatz	
3,345,808 A	*	10/1967	Van Der Lely	A01D 34/246 56/10.2 R
4,124,970 A		11/1978	Bernhardt	

(Continued)

FOREIGN PATENT DOCUMENTS

DE	102011116341 A1	3/2013	
WO	02/102138 A1	12/2002	

OTHER PUBLICATIONS

International Search Report and Written Opinion for PCT/US2018/051030 dated Jan. 15, 2019 (11 pages).

Primary Examiner — Arpad Fabian-Kovacs
(74) *Attorney, Agent, or Firm* — Peter K. Zacharias; Patrick M. Sheldrake

(57) **ABSTRACT**

A header for an agricultural vehicle includes: a header frame; a flexible cutter supported by the header frame and including a plurality of cutting edges; a reel including a plurality of reel sections movably supported by the header frame, each of the reel sections including a plurality of tines and being independently movable from the other reel sections; and at least one rigid link connecting the flexible cutter to one of the reel sections, the at least one rigid link being configured to transmit flexing forces acting on the flexible cutter to the connected one reel section such that a substantially constant separation is maintained between the flexible cutter and the connected one reel section.

20 Claims, 3 Drawing Sheets

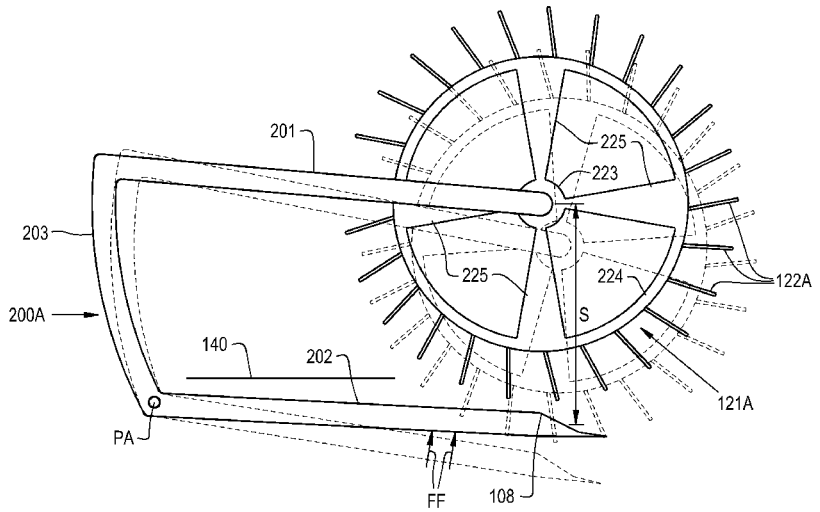

(56) **References Cited**

U.S. PATENT DOCUMENTS

4,204,383	A *	5/1980	Milliken, Jr.	A01D 41/141	56/10.2 E
4,487,004	A	12/1984	Kejr		
4,507,910	A	4/1985	Thornley et al.		
4,565,056	A *	1/1986	Heidjann	A01D 41/141	56/14.4
4,715,172	A *	12/1987	Mosby	A01D 41/144	172/311
4,800,711	A *	1/1989	Hurlburt	A01D 41/14	56/10.2 R
4,907,400	A *	3/1990	Roden	A01D 57/02	56/10.4
5,904,032	A *	5/1999	Rippel	A01D 41/04	460/119
6,029,429	A *	2/2000	Fox	A01D 41/14	56/10.2 E
6,442,918	B1 *	9/2002	Fox	A01D 57/03	56/220
8,176,716	B2 *	5/2012	Coers	A01D 57/02	56/364
9,763,385	B2 *	9/2017	Digman	A01D 41/141	
2009/0107094	A1	4/2009	Bich et al.		
2010/0011728	A1 *	1/2010	Pietricola	A01D 41/148	56/14.4
2010/0293914	A1 *	11/2010	Killen	A01D 57/04	56/128
2012/0304611	A1 *	12/2012	Rayfield	A01D 75/18	56/226

* cited by examiner

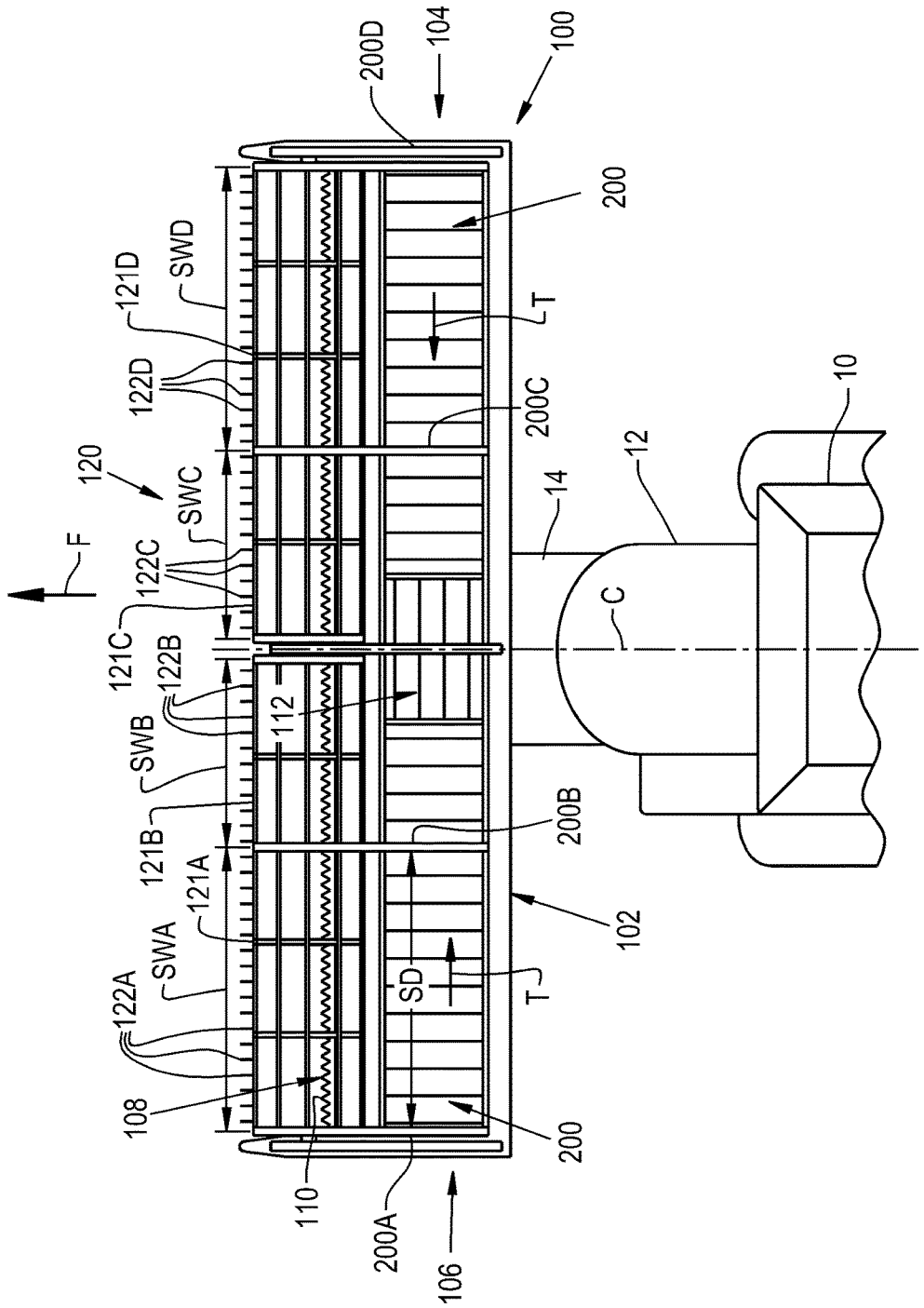
200D
104
100
200
SWD
121D
122D
T
200C
10
12
120
SWC
14
F
122C
121C
C
122B
112
SWB
121B
200B
121A
102
SWA
122A
SD
T
108
200
110
200A
106

Fig. 1

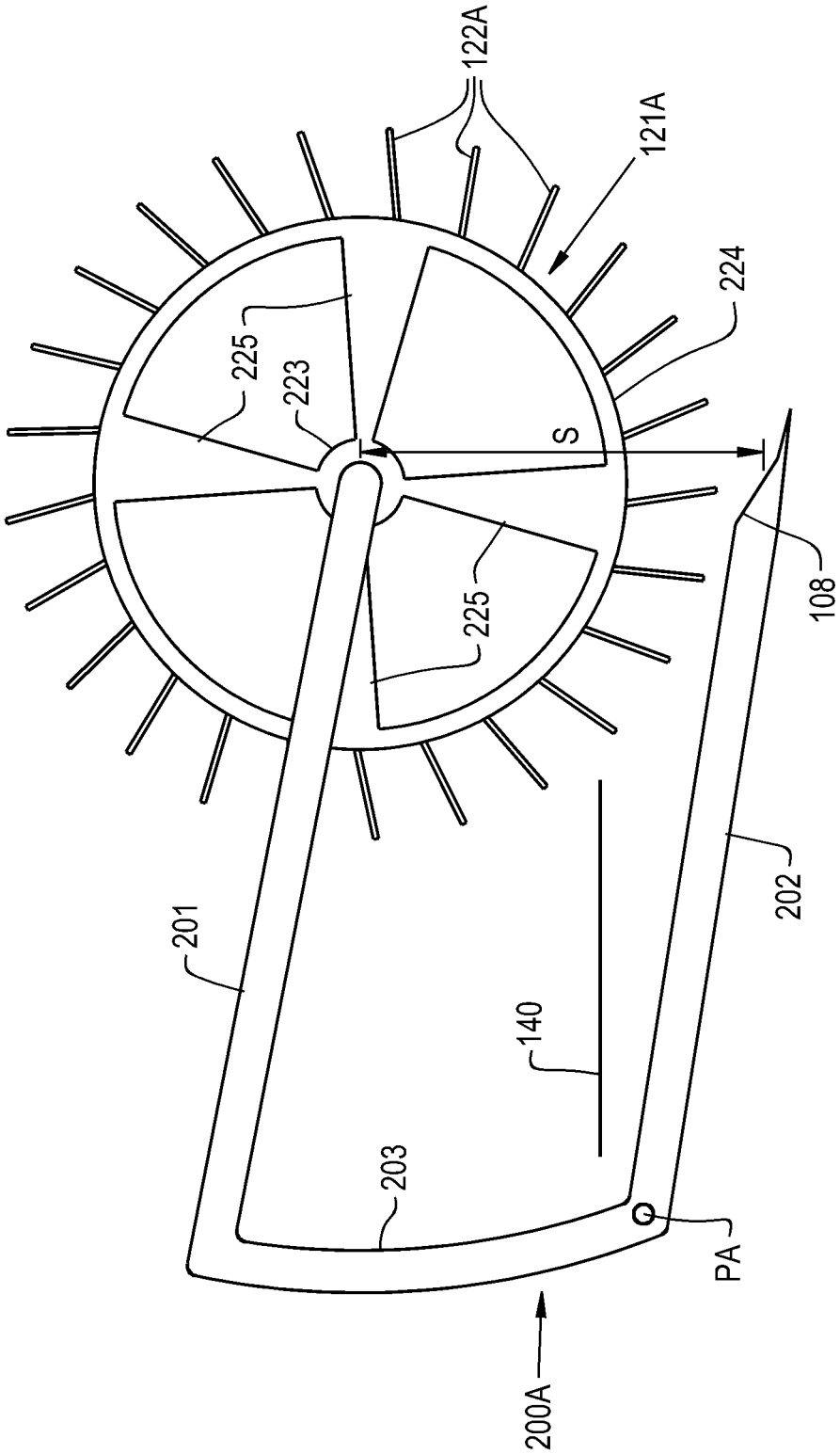

Fig. 2

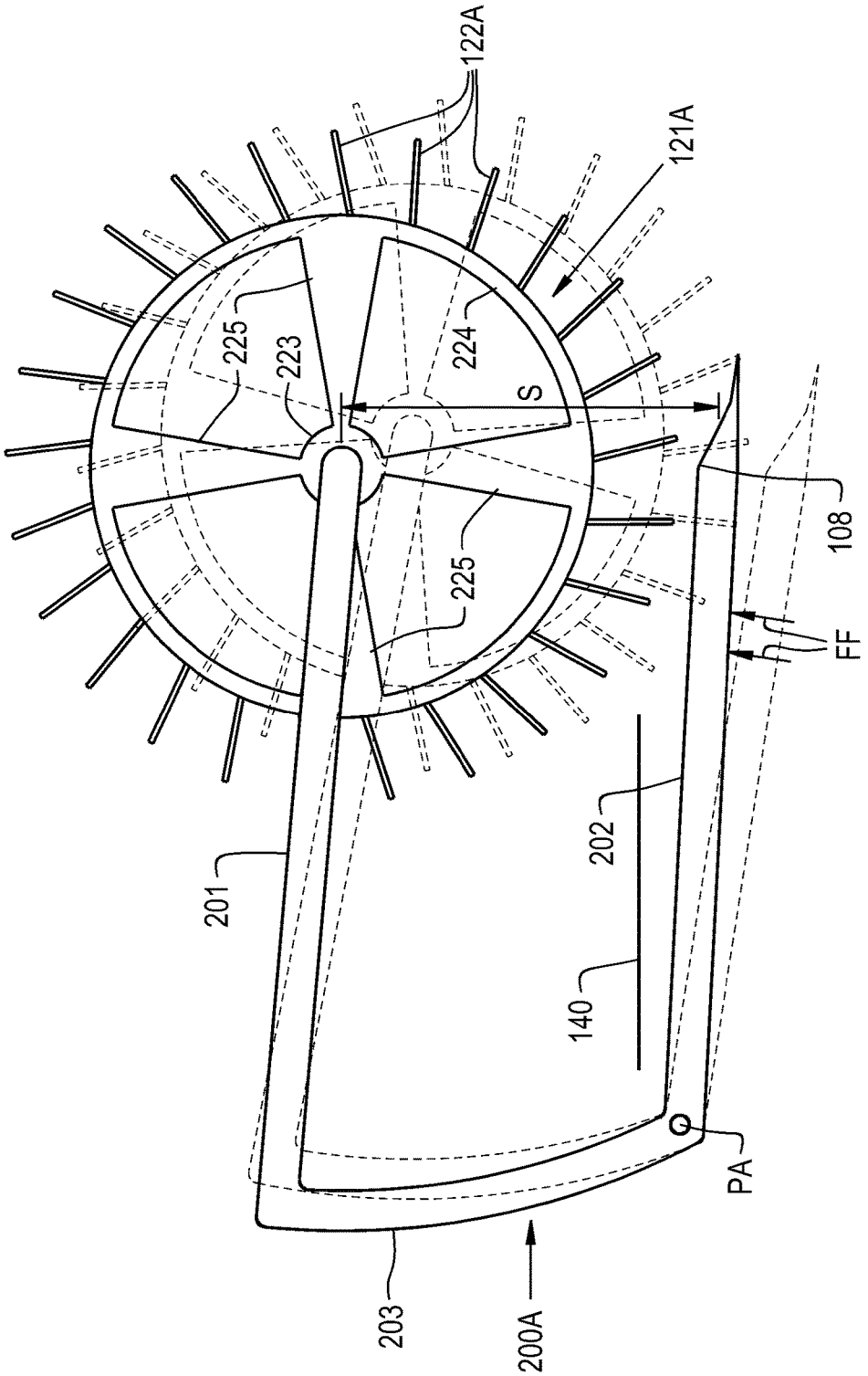

Fig. 3

AGRICULTURAL HEADER WITH CONSTANT REEL TO CUTTER RELATIONSHIP

FIELD OF THE INVENTION

The present invention pertains to an agricultural vehicle and, more specifically, to a header for an agricultural vehicle which includes both a reel and a cutter.

BACKGROUND OF THE INVENTION

An agricultural harvester known as a "combine" is historically termed such because it combines multiple harvesting functions with a single harvesting unit, such as picking, threshing, separating and cleaning. A combine includes a header which removes the crop from a field, and a feeder housing which transports the crop matter into a threshing rotor. The threshing rotor rotates within a perforated housing, which may be in the form of adjustable concaves and performs a threshing operation on the crop to remove the grain. Once the grain is threshed it falls through perforations in the concaves onto a grain pan. From the grain pan the grain is cleaned using a cleaning system, and is then transported to a grain tank onboard the combine. A cleaning fan blows air through the sieves to discharge chaff and other debris toward the rear of the combine. Non-grain crop material such as straw from the threshing section proceeds through a residue system, which may utilize a straw chopper to process the non-grain material and direct it out the rear of the combine. When the grain tank becomes full, the combine is positioned adjacent a vehicle into which the grain is to be unloaded, such as a semi-trailer, gravity box, straight truck, or the like; and an unloading system on the combine is actuated to transfer the grain into the vehicle.

To remove crop material from the field, the header of the combine harvester may be equipped with a cutter, such as a cutter bar assembly, having many sharp cutting elements that reciprocate sidewardly, relative to a forward direction of travel, to sever the crop material from the field before entering the feeder housing. The header may also include a rotating reel with tines or the like to sweep crop material toward the cutting elements.

To better follow the ground during harvesting, many headers include a flexible cutter bar assembly which can flex during travel of the vehicle to more closely follow the contour of the ground when, for example, the vehicle encounters uneven terrain. To flex, the cutter bar assembly may include one or more flexible segments which carry the cutting elements and are connected to arms which can move up and down responsively to forces from the ground, which causes flexing of the flexible segments and vertical movement of the carried cutting elements.

One particular problem encountered by headers including flexible cutter bar assemblies arises due to the movable nature of the cutting elements in relation to the tines of the reel. In many configurations, the cutting elements have the ability to flex a significant distance, such as 3 inches, vertically toward the reel tines; the top position where the cutter bar is able to flex can be referred to as the top of the "flex range" of the cutter bar. To avoid the tines being clipped off by the cutting elements when the cutter bar reaches the top of the flex range, the tines must be kept, at least, above the top of the flex range. In order to keep the tines above the top of the flex range so the tines do not get clipped off by the reel during maximum flexure, the reel may be positioned so that the lowest position of the tines is above

the top of the flex range as the vehicle is harvesting. In such a configuration, reel performance may be poor due to the distance between the tines and the cutting elements being too large to efficiently move crops toward the cutting elements when the cutter bar is at its normal operating position, e.g., 3 inches below the top of the flex range. To improve reel performance, some headers are equipped with reels that can move up and down responsively to flexure of the cutter bar. One particular problem with such known configurations is that there can be a delay between the cutter bar flexing and the reel moving, which risks some of the tines being clipped off by the cutting elements, and the constructions may be complex.

What is needed in the art is a header which can overcome some of the previously described disadvantages of known headers.

SUMMARY OF THE INVENTION

In one exemplary embodiment formed in accordance with the present invention, there is provided a rigid link which connects to one reel section of a multi-section reel and a flexible cutter so flexing forces acting on the flexible cutter transmit to the connected reel section such that a substantially constant separation is maintained between the flexible cutter and connected reel section.

In another exemplary embodiment formed in accordance with the present invention, there is provided a header for an agricultural vehicle including: a header frame; a flexible cutter supported by the header frame and including a plurality of cutting edges; a reel including a plurality of reel sections movably supported by the header frame, each of the reel sections including a plurality of tines and being independently movable from the other reel sections; and at least one rigid link connecting the flexible cutter to one of the reel sections, the at least one rigid link being configured to transmit flexing forces acting on the flexible cutter to the connected one reel section such that a substantially constant separation is maintained between the flexible cutter and the connected one reel section.

In yet another exemplary embodiment formed in accordance with the present invention, there is provided an agricultural vehicle including a chassis and a header carried by the chassis. The header includes: a header frame; a flexible cutter supported by the header frame and including a plurality of cutting edges; a reel including a plurality of reel sections movably supported by the header frame, each of the reel sections including a plurality of tines and being independently movable from the other reel sections; and at least one rigid link connecting the flexible cutter to one of the reel sections, the at least one rigid link being configured to transmit flexing forces acting on the flexible cutter to the connected one reel section such that a substantially constant separation is maintained between the flexible cutter and the connected one reel section.

One possible advantage of exemplary embodiments provided in accordance with the present invention is the rigid link can maintain a substantially constant separation between the flexible cutter and the connected one reel section reactively to flexing forces acting on the flexible cutter with little, if any, delay.

Another possible advantage of exemplary embodiments provided in accordance with the present invention is maintaining the substantially constant separation can improve feeding and the ability to pick up lodged crop.

Yet another possible advantage of exemplary embodiments provided in accordance with the present invention is

only the reel section adjacent to a portion of the flexible cutter which is flexing may move responsively to the flexing, rather than an entirety of the reel.

BRIEF DESCRIPTION OF THE DRAWINGS

For the purpose of illustration, there are shown in the drawings certain embodiments of the present invention. It should be understood, however, that the invention is not limited to the precise arrangements, dimensions, and instruments shown. Like numerals indicate like elements throughout the drawings. In the drawings:

FIG. **1** illustrates a top view of an exemplary embodiment of an agricultural vehicle, the agricultural vehicle comprising a chassis and a header, in accordance with an exemplary embodiment of the present invention;

FIG. **2** illustrates a rigid link and a single reel section of the header of FIG. **1** when a cutter of the header is in a normal, unflexed state, in accordance with an exemplary embodiment of the present invention; and

FIG. **3** illustrates a rigid link and a single reel section of the header of FIG. **2** when the cutter of the header is in a flexed state, in accordance with an exemplary embodiment of the present invention.

DETAILED DESCRIPTION OF THE INVENTION

Referring now to the drawings, and more particularly to FIG. **1**, there is shown an exemplary embodiment of an agricultural vehicle **10** in the form of a combine harvester which generally includes a chassis **12**, a feeder housing **14**, and an attachment in the form of a header **100**. Typically, the combine harvester **10** will include additional internal systems for the separation and handling of collected crop material, but these additional systems are omitted from view for brevity of description. It should be appreciated that the header **100** described and illustrated herein does not necessarily need to be included on combine harvesters, but can be incorporated in other agricultural vehicles such as windrowers. Further, while the exemplary embodiment of the header **100** is shown and described as a draper header, it should be appreciated that the header can be formed, in some exemplary embodiments, as an auger-type header incorporating one or more augers as the crop material conveyor(s).

The header **100** is coupled to the feeder housing **14** and supported by the chassis **12** of the agricultural vehicle **10**. The header **100** has a header frame **102** and a pair of opposed lateral ends **104**, **106**. The header frame **102** supports one or more flexible cutters **108**, shown as a cutter bar, with reciprocating cutting edges **110** to cut crop material as the agricultural vehicle **10** travels in a forward direction, denoted by arrow F. The header **100** may further include a center feed belt **112** or a center auger that conveys the crop material into the feeder housing **14**. In one exemplary embodiment, the header **100** can include one or more lateral, flexible draper belts **140** that are positioned rearwardly of the cutter bar(s) **108** and travel, i.e. rotate, in opposing directions of travel, denoted by each arrow "T", in order to convey the crop material inwardly to the center feed belt **112** and thereby the feeder housing **14**. In some exemplary embodiments, the header **100** may include a pair of counter-rotating cross augers, rather than the draper belts **140**, to convey crop material laterally inward toward the center feed belt **112**.

The header **100** includes a rotating reel **120** with a plurality of reel sections **121**A, **121**B, **121**C, **121**D which are each movably supported by the header frame **102** and include corresponding tines **122**A, **122**B, **122**C, **122**D or the like to sweep crop material inwardly toward the flexible cutter(s) **108** for cutting as the reel sections **121**A, **121**B, **121**C, **121**D rotate. As shown, the reel **120** includes four independently movable reel sections **121**A, **121**B, **121**C, and **121**D, with two reel sections on each side of a center line C extending through the header **100**, but it should be appreciated that the reel **120** may include any number of desired reel sections so long as the number of reel sections is greater than one. Each reel section **121**A, **121**B, **121**C, **121**D defines a respective reel section width SWA, SWB, SWC, SWD, the significance of which will be described further herein. One or more of the reel section widths SWA, SWB, SWC, SWD may be different from the others, as shown, or the widths may all be equal if desired. In some exemplary embodiments, the reel section **121**A may be connected to the reel section **121**B and the reel section **121**C may be connected to the reel section **121**D, with the reel section **121**A being flexibly movable relative to the reel section **121**B and the reel section **121**C being flexibly movable relative to the reel section **121**D so the reel sections **121**A, **121**B, **121**C, **121**D can move independently from one another.

With further reference to FIG. **1**, and referring now to FIG. **2** as well, the header **100** includes one or more rigid links **200**A, **200**B, **200**C, **200**D connecting the flexible cutter **108** to a respective one of the reel sections **121**A, **121**B, **121**C, **121**D. As used herein, the links **200**A, **200**B, **200**C, **200**D are "rigid" in the sense that forces acting on the links **200**A, **200**B, **200**C, **200**D will tend to be transmitted through the links **200**A, **200**B, **200**C, **200**D to the connected components, such as one of the reel sections **121**A and the flexible cutter **108** as shown in FIG. **2**, rather than the acting forces tending to deform the material of the link **200**A. In this sense, each link **200**A, **200**B, **200**C, **200**D can be formed as a unitary body from a relatively rigid material, such as steel or other metals, which resists bending when subjected to forces that may be encountered during harvesting; the rigid links **200**A, **200**B, **200**C, **200**D may be formed, for example, by casting steel into the desired shape. The significance of the rigidity of the links **200**A, **200**B, **200**C, **200**D is described further herein.

Referring specifically now to FIG. **2**, an exemplary embodiment of one of the rigid links **200**A is shown connecting the reel section **121**A to the flexible cutter **108**; it should be appreciated that, in one exemplary embodiment, the other rigid links **200**B, **200**C, **200**D can be formed similarly to the rigid link **200**A according to the present invention. As can be seen, the rigid link **200**A can include a reel arm portion **201** which connects to the one reel section **121**A and a cutter arm portion **202** which connects to the flexible cutter **108**; while both the reel arm portion **201** and cutter arm portion **202** are shown as having a substantially straight shape, one or both of the respective portions **201**, **202** may also be curved, if desired. The reel arm portion **201** and the cutter arm portion **202** can be connected to one another by a connecting portion **203** which, as shown, may have a curved shape; in one exemplary embodiment, the connecting portion **203** may curve rearwardly from the cutter arm portion **202** to the reel arm portion **201**. The reel arm portion **201** may connect, for example, to a hub **223** of the reel section **121**A which is connected to a rim **224** of the reel section **121**A by a plurality of spokes **225**, the rim **224** of the reel section **224** defining a lateral end of the reel section **121**A, so movement of the reel arm portion **201** causes a corresponding movement of the reel section **121**A. Similarly, the cutter arm portion **202** may connect to the

flexible cutter **108**, which may be a cutter bar, so flexure of the cutter bar **108** causes a corresponding movement of the reel section **121**A, or vice versa.

With further reference to FIG. **2**, and now also referring to FIG. **3**, the effect of the link **200**A being rigid is illustrated. Since the cutter bar **108** is flexible in response to certain flexing forces acting on the cutter bar **108**, which are generally vertically directed forces, the cutter bar **108** has a substantially unflexed state, shown in FIG. **2**, when the cutter bar **108** does not have any significant vertical forces other than gravity acting on the cutter bar **108**. As can be seen, when a flexing force, illustrated as arrow FF in FIG. **3**, acts on the flexible cutter bar **108** and causes flexure of the cutter bar **108**, as shown in FIG. **3**, the cutter bar **108** tends to flex in the direction of the flexing force FF. If the reel section **121**A were to stay in the same position (illustrated in dashed lines in FIG. **3**) when the cutter bar **108** flexed, the tines **122**A of the reel section **121**A would be placed in reach of the cutting edges **110** and possibly clipped off the reel section **121**A. Due to the rigidity of the link **200**A, however, the flexing force FF acting on the flexible cutter **108** transmits to the connected reel section **121**A to also cause a corresponding movement of the reel section **121**A, maintaining a substantially constant separation S between the flexible cutter **108** and the connected reel section **121**A. In this sense, the rigid link **200**A is configured to transmit flexing forces FF acting on the flexible cutter **108** to the connected one reel section **121**A such that the substantially constant separation S is maintained between the flexible cutter **108** and the connected one reel section **121**A. The flexing forces FF acting on the flexible cutter **108** may originate from the rigid link **200**A or, alternatively, the flexing forces FF acting on the flexible cutter **108** may originate from the ground or other source. As used herein, the separation S is "substantially constant" in the sense that the distance between the flexible cutter **108** and any part of the reel section **121**A, such as the hub **223**, may only change by 1-5% due to slight deformation of the material of the rigid link **200**A when the flexing force FF transmits through the rigid link **200**A; however, in some exemplary embodiments the separation S between the flexible cutter **108** and the reel section **121**A may not appreciably change due to the link **200**A being so rigid that the material does not appreciably deform as the flexing force FF transmits through the rigid link **200**A. The separation S between the flexible cutter **108** and the connected reel section **121**A may be controlled, for example, by a length and shape of the connecting portion **203** of the rigid link **200**A and/or by the respective lengths and angling of the reel arm portion **201** and cutter arm portion **202** relative to the connecting portion **203**.

Since the flexing force FF transmits through the rigid link **200**A to the reel section **121**A, the corresponding movement of the reel section **121**A should be almost instantaneous in response to the flexing force FF acting on the flexible cutter **108**, allowing the tines **122**A to be quickly taken out of the area where the cutting elements **110** are and which may allow the reel section **121**A to be placed close to the flexible cutter **108** to improve reel performance without significantly increasing the risk of the flexible cutter **108** clipping off any tines **122**A when the flexible cutter **108** flexes due to the flexing forces FF. Connecting the rigid link **200**A to both the reel section **121**A and the flexible cutter **108**, therefore, can allow the reel section **121**A to near-instantaneously move reactively to flexing forces FF which cause flexure of the flexible cutter **108** using a relatively simple construction and protect the tines **122**A during flexure of the flexible cutter **108** when the tines **122**A are in the top of the flex range when the flexible cutter **108** is unflexed.

To transmit the flexing forces FF through the rigid link **200**A, the rigid link **200**A can be pivotably coupled to the header frame **102** so the flexing forces FF cause pivoting of the rigid link **200**A, as can be seen from comparing FIGS. **2** and **3**, to move the reel section **121**A responsively to flexure of the flexible cutter **108**. As shown in FIG. **2**, the rigid link **200**A can define and pivot about a pivot axis PA, which may be a pivot pin, which is located rearwardly of the draper belt **140**. Having the pivot axis PA behind the draper belt **140** in combination with the curved shape of the connecting portion **203** can allow the rigid link **200**A to pivot and transmit the flexing forces FF without interfering with other components of the header **100**, such as the draper belt **140**, since the vertical movement of the cutter arm portion **202** may be less adjacent to the pivot axis PA than adjacent to the flexible cutter **108**. To allow fore, aft, up, and down movements of the reel section **121**A, the rigid link **200**A may be pivotably connected to, for example, a portion of the header frame **102** connected to one or more actuators (not shown) which effect fore, aft, up, and/or down movements of the reel section **121**A, with fore, aft, up, and/or down movement of the connected portion of the header frame **102** and rigid link **200**A causing a corresponding movement of the connected reel section **121**A.

Referring again to FIG. **1**, one of the links **200**A (which may be referred to as a first rigid link) connecting one of the reel sections **121**A (which may be referred to as a first reel section) to the flexible cutter **108** and another of the links **200**B (which may be referred to as a second rigid link) connecting another of the reel sections **121**B (which may be referred to as a second reel section) to the flexible cutter **108** may define a link separation distance SD therebetween which is at least equal to the reel width SWA of the first reel section **121**A. Separating the adjacent links **200**A, **200**B by at least the link separation distance SD equal to the reel width SWA of the first reel section **121**A can allow movement of each of the reel sections **121**A and **121**B by the rigid links **200**A, **200**B to be independent from each other without the rigid links **200**A, **200**B interfering with movement of the non-connected reel section **121**B, **121**A. The other rigid links **121**C, **121**D can be similarly separated by a distance at least equal to, for example, the reel width SWC of the reel section **121**C, for similar reasons.

It should be appreciated from the foregoing that exemplary embodiments of the present invention not only provide for near-instantaneous adjustment of the reel **120** responsively to flexing forces FF acting on the flexible cutter **108**, but can also allow adjustment of the reel **120** to only occur in the respective reel section **121**A, **121**B, **121**C, **121**D adjacent to where the flexing of the flexible cutter **108** occurs. Exemplary embodiments of the present invention, therefore, can provide a header **100** with a reel **120** which can be close to the flexible cutter **108** with a relatively low risk of tines **122**A, **122**B, **122**C, **122**D being clipped off by the flexible cutter **108** and with reel sections **121**A, **121**B, **121**C, **121**D which only adjust responsively to flexing forces FF transmitting through a respectively connected rigid link **200**A, **200**B, **200**C, **200**D so adjustment of the reel **120** may not occur across the entire reel **120** when only a portion of the flexible cutter **108** flexes.

These and other advantages of the present invention will be apparent to those skilled in the art from the foregoing specification. Accordingly, it is to be recognized by those skilled in the art that changes or modifications may be made to the above-described embodiments without departing from

the broad inventive concepts of the invention. It is to be understood that this invention is not limited to the particular embodiments described herein, but is intended to include all changes and modifications that are within the scope and spirit of the invention.

What is claimed is:

1. A header for an agricultural vehicle, comprising:

a header frame;

a flexible cutter supported by said header frame and including a plurality of cutting edges;

a reel including a plurality of reel sections movably supported by said header frame, each of said reel sections including a plurality of tines and being independently movable from the other reel sections; and

at least one rigid link connecting said flexible cutter to one of said reel sections, said at least one rigid link being configured to transmit flexing forces acting on said flexible cutter to said connected one reel section such that a substantially constant separation is maintained between said flexible cutter and said connected one reel section.

2. The header of claim **1**, wherein said at least one rigid link is pivotably coupled to said header frame.

3. The header of claim **2**, further comprising a draper belt supported by said header frame rearwardly of said flexible cutter, said at least one rigid link defining a pivot axis located rearwardly of said draper belt.

4. The header of claim **1**, wherein said header is configured as a draper header or an auger-type header.

5. The header of claim **1**, wherein said at least one rigid link comprises a plurality of rigid links, each of said rigid links connecting said flexible cutter to a respective one of said reel sections.

6. The header of claim **5**, wherein said plurality of reel sections comprises a first reel section having a first reel width and a second reel section adjacent to said first reel section, said plurality of rigid links including a first rigid link connecting said first reel section to said flexible cutter and a second rigid link connecting said second reel section to said flexible cutter, said first rigid link and said second rigid link defining a link separation distance therebetween which is at least equal to said first reel width.

7. The header of claim **1**, wherein said at least one rigid link includes a reel arm portion connected to said connected one reel section and a cutter arm portion connected to said flexible cutter and said reel arm portion.

8. The header of claim **7**, wherein said at least one rigid link includes a connecting portion connecting said reel arm portion to said cutter arm portion, said connecting portion having a curved shape.

9. The header of claim **8**, wherein at least one of said reel arm portion and said cutter arm portion has a straight shape.

10. The header of claim **1**, wherein said at least one rigid link is formed as a unitary body.

11. An agricultural vehicle, comprising:

a chassis; and

a header carried by said chassis, said header including:

a header frame;

a flexible cutter supported by said header frame and including a plurality of cutting edges;

a reel including a plurality of reel sections movably supported by said header frame, each of said reel sections including a plurality of tines and being independently movable from the other reel sections; and

at least one rigid link connecting said flexible cutter to one of said reel sections, said at least one rigid link being configured to transmit flexing forces acting on said flexible cutter to said connected one reel section such that a substantially constant separation is maintained between said flexible cutter and said connected one reel section.

12. The agricultural vehicle of claim **11**, wherein said at least one rigid link is pivotably coupled to said header frame.

13. The agricultural vehicle of claim **12**, further comprising a draper belt supported by said header frame rearwardly of said flexible cutter, said at least one rigid link defining a pivot axis located rearwardly of said draper belt.

14. The header of claim **11**, wherein said header is configured as a draper header or an auger-type header.

15. The agricultural vehicle of claim **11**, wherein said at least one rigid link comprises a plurality of rigid links, each of said rigid links connecting said flexible cutter to a respective one of said reel sections.

16. The agricultural vehicle of claim **15**, wherein said plurality of reel sections comprises a first reel section having a first reel width and a second reel section adjacent to said first reel section, said plurality of rigid links including a first rigid link connecting said first reel section to said flexible cutter and a second rigid link connecting said second reel section to said flexible cutter, said first rigid link and said second rigid link defining a link separation distance therebetween which is at least equal to said first reel width.

17. The agricultural vehicle of claim **11**, wherein said at least one rigid link includes a reel arm portion connected to said connected one reel section and a cutter arm portion connected to said flexible cutter and said reel arm portion.

18. The agricultural vehicle of claim **17**, wherein said at least one rigid link includes a connecting portion connecting said reel arm portion to said cutter arm portion, said connecting portion having a curved shape.

19. The agricultural vehicle of claim **18**, wherein at least one of said reel arm portion and said cutter arm portion has a straight shape.

20. The agricultural vehicle of claim **11**, wherein said at least one rigid link is formed as a unitary body.

* * * * *