Oct. 29, 1968 R. L. MAASS 3,408,248

HARD SURFACE FLOOR COVERING AND METHOD OF MANUFACTURE

Filed Jan. 20, 1964

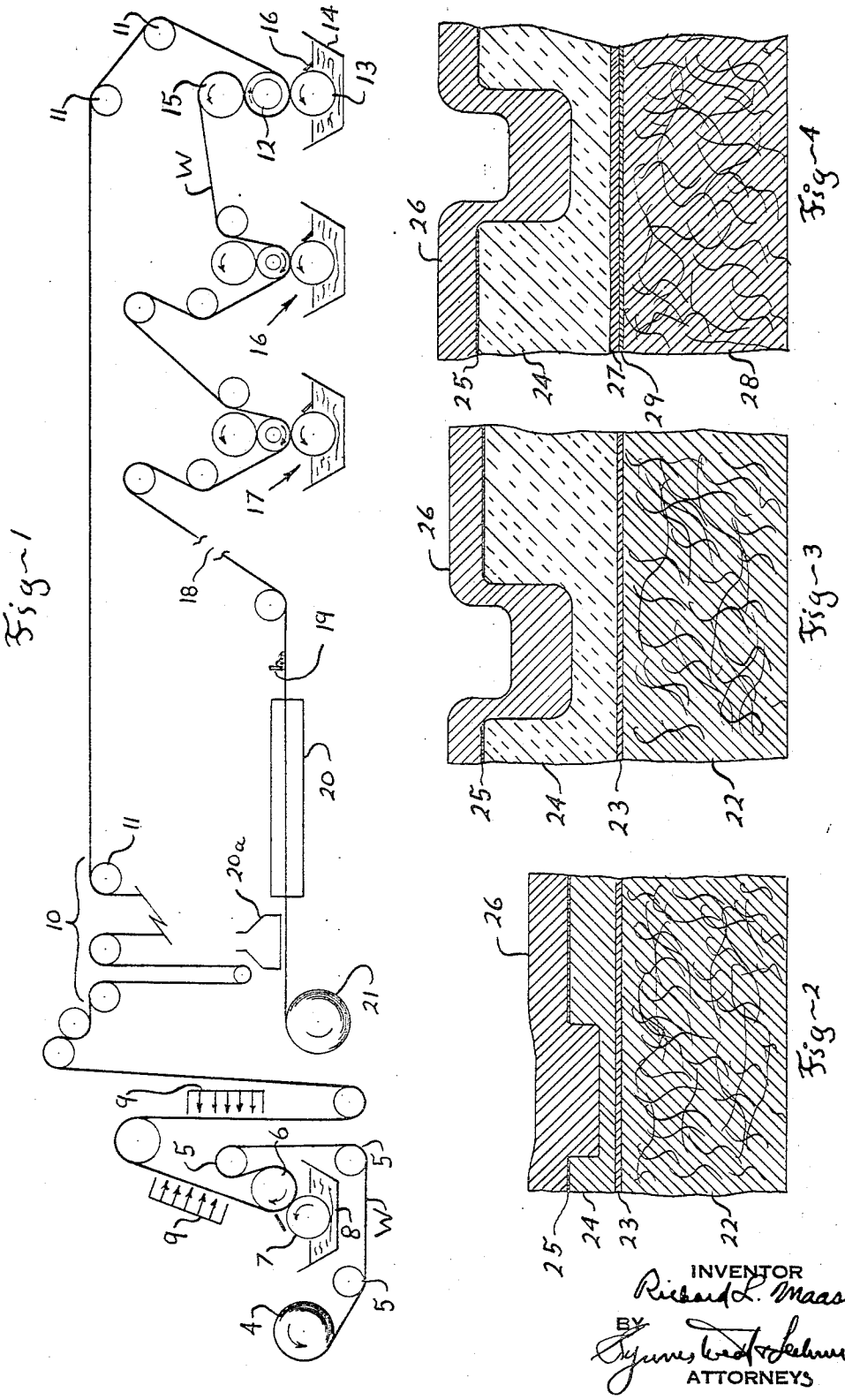

INVENTOR
Richard L. Maass
BY
Symmes Wedd & Lehmer
ATTORNEYS

United States Patent Office

3,408,248

Patented Oct. 29, 1968

3,408,248

HARD SURFACE FLOOR COVERING AND METHOD OF MANUFACTURE

Richard L. Maass, Salisbury Township, Lehigh County, Pa., assignor, by mesne assignments, to GAF Corporation, a corporation of Delaware

Filed Jan. 20, 1964, Ser. No. 338,767
8 Claims. (Cl. 161—5)

This invention relates to hard surface floor coverings and is particularly concerned with a novel type of floor covering incorporating vinyl type resin materials and preferably also incorporating a felt base on which the various layers of the floor covering are applied.

It is an important object of the present invention to provide a floor covering characterized by a relief pattern effect, i.e., a pattern effect in which certain pattern areas represent lands and other pattern areas represent valleys, the lands being relatively thick and the valleys relatively thin. In a typical pattern effect of this type as contemplated according to the invention, the valleys consitute a network of relatively narrow pattern areas intervening between the other and wider pattern areas which represent lands.

In addition to the relief pattern effect above referred to, the invention contemplates, at the same time, the provision of a spongy, expanded, or resilient structure in the resin material of the lands. This provides resilience in the floor covering in addition to the resilience obtained by employment of a felt type base or substrate.

The invention also contemplates simple and effective techniques for producing floor coverings of the kind mentioned above.

How the foregoing and other objects and advantages are attained will appear more fully from the following description referring to the accompanying drawings in which:

FIGURE 1 is a diagrammatic or schematic illustration of equipment suitable for preparing a floor covering according to the present invention;

FIGURE 2 is a fragmentary sectional view, on a greatly enlarged scale, through a floor covering being prepared according to the present invention, the view representing the floor covering in an intermediate stage of the process;

FIGURE 3 is a view similar to FIGURE 2 but illustrating the completed floor covering; and

FIGURE 4 is a view similar to FIGURE 3 but illustrating a modification.

In a preferred embodiment according to the invention the floor covering is built upon a substrate comprising a felt sheet or web, for instance an asbestos felt web.

Certain of the coatings and decorative materials contemplated according to the invention may conveniently be applied in a manner similar to that provided for in the copending application of Edward R. Erb, Ser. No. 270,591, filed Apr. 4, 1963, now abandoned, but a continuation of which was filed Mar. 8, 1967, under Ser. No. 633,647, and assigned to the assignee of the present application. FIGURE 1 of the drawings of the present application reproduces certain portions of the figure of corresponding number in said copending application, and the

coating operations schematically illustrated in that figure are here briefly described in the manner used in the practice of the present invention.

In the equipment as illustrated in FIGURE 1, the felt sheet or web W may be supplied from a supply roll **4** and fed therefrom over guide rolls **5** around a backup roll **6** which retains the web in close proximity to the applicator roll **7** which serves to transfer a coating composition from the reservoir **8** to the sheet or web. This coating composition is in the nature of a primer coat which is hardened by application of heat, for instance by hot air blowers or by radiant or gas heaters, such as diagrammatically indicated at **9—9**.

The web is next fed to an unwind festoon mechanism bracketted at **10**, only a small portion of this mechanism being illustrated in the drawing. Guide rolls **11** serve to deliver the prime coated web to the roll **12** of a coating mechanism which also includes the applicator roll **13** which picks up the coating material from the reservoir **14** and transfers it to the web as it passes around the roll **12**. From the roll **12** the web passes around roll **15** which is a heated roll, serving to partially harden the coating here applied. The roll **13** preferably comprises an engraved or similar type of roll having depressions adapted to pick up coating material from the reservoir **14** and transfer it to the web with substantially uniform distribution as the web passes around the roll **12**. A doctor blade **16** is employed in association with the roll **13** and serves to wipe off excess coating material and return it to the reservoir **14**. Roll **12** is preferably rubber surfaced and constitutes a yielding backup roll cooperating with roll **15** which latter is an engraved roll having recesses or depressions corresponding to lands of the relief pattern of the product and having raised portions or plateaus corresponding to the valleys of the relief pattern. The quantity of coating material fed by the roll **13** to the web in this coating operation is preferably such as to develop a small bead of coating material in the nip between the rolls **12** and **15** in the manner fully disclosed in the copending application above referred to. As the web W leaves the roll **15** it carries a coating superimposed on the prime coat, the coating having lands and valleys as above mentioned.

The web then passes through any desired number of printing stages, two such stages being here illustrated and identified in general by the numerals **16** and **17**. These printing stages serve to print decorative coloring materials on the lands of the relief pattern of the product and this may be done either in registry with the relief pattern or at random with respect to the relief pattern. In either event a color contrast is developed between the valley and the lands of the relief pattern.

The coated and printing web then passes over angle bars diagrammatically indicated at **18** (or any other suitable means) for turning the web face up. Thereafter the web passes knife coater **19** which serves to apply a clear top coating to the product just prior to entrance thereof into a curing oven **20**. Upon discharge from the curing oven the web passes a cooling means **20*a*** for instance an air blast, and is then rolled up as indicated at **21**.

With the foregoing sequence of process steps in mind, reference is now made to typical and preferred types of coating compositions employed in accordance with the present invention. The coating initially applied by the roll **7** is in the nature of a size or prime coating for instance an aqueous dispersion of an elastomeric rubber or resin material preferably including some inert powdered filler material such as ground limestone. The employment of a prime coating is not an essential according to the present invention.

The coating material applied by the applicator roll **13** in accordance with the technique of the present invention preferably comprises a heat hardenable pigmented liquid vinyl organosol, for instance a coating made up of ingredients as follows:

	Parts by weight
Polyvinyl chloride dispersion resin	100
Butyl benzyl phthalate (plasticizer)	55
Epoxidized soya bean oil (plasticizer and stabilizer)	6
Barium cadmium zinc stabilizer	4.5
Titanium dioxide (pigment)	7.5
Mineral spirits (diluent)	6
Azodicarbonamide	2.5

In the above formulation the azodicarbonamide is a foaming agent, the action of which is described more fully herebelow. The action of the rolls **13**, **12** and **15**, in applying a coating to the web preferably conforms with the action of the similar rolls disclosed in the copending application above referred to, by which a bead of coating material is established and maintained in the nip between rolls **12** and **15**, thereby providing, in effect, for a "casting" action in developing the background coating. With the roll **15** heated, as is contemplated to a temperature from about 290° F. to about 320° F., a coating applied as just described is hardened to an extent sufficient to enable printing thereon, for instance printing by gravure type of rolls, such as incorporated in printing sections **16** and **17** as illustrated in FIGURE 1. However, this heating is insufficient at this stage to decompose the azodicarbonamide and expand the background coating. It will be understood that in each printing section, some drying would be applied to the web after each printing stage.

Any desired number of printing sections may be employed, depending upon the pattern and colors of printing contemplated, and after the last printing section, the printed web is passed under a guide roll **18** and coater **19** by which a clear vinyl wear layer or coating is applied to the product. The coating applied by the coater **19** may advantageously be formulated in a manner similar to that described above for use with the applicator roll **13**, except for the omission of pigment and for the omission of the azodicarbonamide or other foaming agent. The action of this coating operation is to apply a transparent coating over the entire surface of the product including both the lands and the valleys of the coating applied from the reservoir **14**. The web is now passed into the curing oven **20** as already noted above, and it is contemplated that the heating in this oven be sufficient not only to complete the hardening or fusion of the vinyl materials present but also to cause the azodicarbonamide or other foaming agent to decompose and thus develop a porous or spongy character in the background coating previously applied from the reservoir **14**. This may be accomplished with an oven temperature of from about 350° F. to 380° F. with an oven dwell of about three minutes. It will be understood that the oven temperature will be influenced by various factors, such as the stabilization system of the coating formulation, the oven dwell, the foaming agent, and even the substrate used.

The condition of the product after leaving the coater **19** and before expansion of the foaming agent in the oven **20** is illustrated in FIGURE 2 of the drawings. Here it will be seen that the felt substrate is indicated at **22** and the primer coat at **23**. The coating **24** is that applied by the rolls **13**, **12** and **15** and, as shown in FIGURE 2, has lands and valleys. The reference character **25** indicates the printing applied on the lands, and the numeral **26** indicates the transparent wear layer which is applied by the coater **19**.

It will be understood that the illustration in FIGURE 2 is greatly enlarged and is not intended to accurately portray the relative thicknesses of various of the layers applied. In a typical operation, the felt substrate **22** may be of thickness of the order of 40 mils. The prime coat **23** need not necessarily have much if any thickness and may even be in large part absorbed into the felt substrate. In a typical operation the background coating **24** may have valleys of the order of two mils in thickness and lands of the order of six mils. The printing **25** would of course ordinarily be substantially inconsequential in respect to thickness of the product. The clear top coating **26**, in a typical operation, would be of the order of five mils in thickness over the lands, and because of tendency to flow into the valleys, might be of the order of about seven or eight mils in thickness in the regions of the valleys.

Thus it will be seen that the form of the product as shown in FIGURE 2 would retain little if any of the relief effect of the background coating **24**. However upon expansion of the azodicarbonamide or other foaming agent in the oven **20**, the product takes on the form illustrated in FIGURE 3. Here it will be seen that the foaming agent has been expanded and in consequence the lands of the background coating **24** are now much thicker than prior to expansion. In a typical case such expansion will increase the thickness of the lands approximately three times the original thickness. In view of this the land thickness may be of the order of eighteen mils, as compared with an expanded thickness of the valleys of about six mils. Since the thickness of the transparent wear layer remains the same, i.e., is not expanded because no such agent is included in its formulation, the relief effect is redeveloped, and, indeed, it is even more pronounced than is the case with the background coating itself prior to application of the transparent wear layer and prior to expansion of the foaming agent.

A product made in this way has a number of distinct advantages. In the first place the expanded or spongy background layer **24** contributes a cushion effect in the product. This spongy or expanded final material is also characterized by excellent resilience and recovery, so that indentations produced, for example by the heels of shoes are in effect "self-healing."

In addition to the foregoing, the accentuation of the relief effect resulting from expansion of the background layer **24** contributes a pleasing effect to the pattern, especially in a situation where the valleys are arranged in a network of relatively narrow areas simulating mortar joints between the intervening lands, which latter are advantageously of relatively large width, as compared with the width of the valleys.

It is of importance in producing the product herein contemplated that the transparent wear layer or coating be applied prior to heating of the material to expand the foaming agent. If the expansion were to be effected prior to application of the transparent wear coating, the accentuated depth of the valleys would tend to be obliterated by being filled up with the transparent wear coating material, thereby diminishing or impairing the desired relief effect obtained by decomposition of the foaming agent.

It will be understood that other foaming agents may also be employed, provided their blowing or decomposition temperature is high enough so that they do not prematurely produce expansion prior to application of the top coat for instance N,N'-dinitrosopentamethylene tetramine or p,p'-oxybis (benzene sulphonyl hydrazide). The amount of foaming agent employed should not be very great, preferably about 2.5 parts per hundred parts of the

vinyl material present in the background coating. A suitable range for foaming agent will be from about 1 part to about 3 parts.

An alternative form of product is illustrated in FIGURE 4. This product is made up by applying coatings to a paper sheet **27**. Such a sheet or web may be fed through process steps similar to those illustrated in FIGURE 1, except for the omission of the primer coating effected by rolls **6** and **7**. In such case the paper web would be fed directly to the roll **12**. Thus a background coating **28** such as that described above may be applied directly to a paper web **27**, after which printing **25** may be applied as well as a transparent wear layer **26**. After the foaming agent has been expanded by heating in the oven **20**, the decorated and coated paper sheet may thereafter be laminated to a felt base, such as an asphalt saturated felt or a resin saturated felt or an asbestos felting such as indicated by numeral **28**, for instance by means of a laminating adhesive **29**.

I claim:

1. A method for making a hard surface floor covering or the like comprising applying to a substrate a decorative layer comprising polyvinyl chloride material, the decorative layer having certain pattern areas in which the layer is relatively thick and in which the polyvinyl chloride material is relatively spongy as compared with other pattern areas to provide a pattern relief effect, developing a color pattern effect in registry with the relief pattern effect by printing at least the relatively thick pattern areas to provide color contrast between the thick and the thin pattern areas, and subsequently applying a transparent polyvinyl chloride wear layer to the printed decorative layer, the wear layer being of such thickness in the thin and thick areas of the pattern as to retain the relief effect of the pattern.

2. A method for making a hard surface floor covering or the like comprising applying to a substrate a layer of a heat hardenable polyvinyl chloride dispersion containing a foaming agent thermally decomposable to develop a spongy structure in the polyvinyl chloride during heat hardening thereof, said dispersion being applied in different thicknesses in different pattern areas, heating said layer sufficiently to solidify the layer but not sufficiently to decompose said foaming agent, after said heating printing pattern areas of one thickness with color material contrasting with the color of pattern areas of a different thickness, after the printing applying a layer of a transparent heat hardenable polyvinyl chloride dispersion, and therefter heating the layers to harden the polyvinyl chloride and to decompose the foaming agent and thereby develop a spongy structure having a relief pattern effect in the polyvinyl chloride of the first layer and having a color pattern effect in registry with the relief pattern effect.

3. A method for making a sheet type covering product comprising applying to a substrate a layer of decorative materials having relief and color pattern effects in registry with each other, and applying a transparent wear layer over the layer of decorative materials, the application of the decorative materials including the following steps: applying to the substrate a plasticized liquid polyvinyl chloride resin coating of one color throughout the entire area of the substrate, heating sufficiently to gel the coating without substantial fusion of the plasticized resin, in certain pattern areas of the gelled coating applying color material contrasting with the color of the resin coating to thereby provide a contrasting color pattern effect between different pattern areas, the portions of the resin coating in registry with the pattern areas of one color containing a foaming agent decomposable at the fusion temperature of said plasticized resin and said agent being present in said portions of the resin coating in an amount sufficient to markedly expand those portions in comparison with the portions of the coating in registry with the pattern areas of the other color, and heating sufficiently to fuse the plasticized resin coating and concurrently decompose said foaming agent and thus develop the relief pattern effect in registry with the color pattern effect.

4. A method according to claim **3** in which the transparent wear layer applied over the decorative materials comprises polyvinyl chloride resin, the wear layer being applied as a plasticized liquid polyvinyl chloride resin coating after the application of the color material, but before the heating to fuse the plasticized resin of the decorative layer, so that the plasticized resin coatings of both the decorative layer and the wear layer are concurrently fused.

5. A sheet type covering product comprising a base, a wear layer, and decorative materials intervening between the base and the wear layer, the decorative materials comprising a single coat of resin material applied throughout the entire area of the base, portions of said single coat in certain pattern areas being of relatively small thickness as compared with other portions in intervening pattern areas, said areas of relatively small thickness being relatively narrow and comprising a network of valley areas and said intervening pattern areas comprising relatively broad elevated land areas formed of porous expanded polyvinyl chloride of sufficient thickness to provide a pronounced relief pattern effect in contrast with the valley areas, at least some of the pattern areas of one thickness being printed with a color material contrasting with the color pattern areas of different thickness to provide a contrasting color pattern effect in registry with the relief pattern effect, the wear layer covering all of the pattern areas and being at least as thick over the valley areas as over the land areas but not of sufficient thickness in the valleys to appreciably impair the relief pattern effect, and said wear layer comprising transparent polyvinyl chloride resin so that the color pattern effect is visible.

6. A product according to claim **5** in which the land areas are printed with color material contrasting with the color of the valley areas.

7. A sheet type covering product comprising a felt base, a polyvinyl chloride wear layer, and decorative materials intervening between the base and the wear layer, the decorative materials comprising a single coat of substantially opaque resin material applied throughout the entire area of the base, portions of said single coat being of different thickness to provide a relief pattern effect and the portions of one thickness being printed with color material contrasting with the color of the portions of another thickness to provide a color pattern effect in registry with the relief pattern effect, the portions of said coat of relatively small thickness comprising a network of narrow valley areas and the portions of said coat of relatively great thickness comprising relatively broad elevated land areas formed of porous expanded polyvinyl chloride resin material, the felt base being of uniform thickness under both the thin and thick areas of said coat, the wear layer covering all of the pattern areas and being at least as thick over the valley areas as over the land areas but not of sufficient thickness in the valleys to appreciably impair the relief pattern effect, and said wear layer being transparent so that the color pattern effect is visible.

8. A sheet type covering product comprising a base, a wear layer, and decorative materials intervening between the base and the wear layer, the decorative materials comprising a single coat of resin material applied throughout the entire area of the base, portions of said single coat in certain pattern areas being of relatively small thickness as compared with other portions in intervening pattern areas, said areas of relatively small thickness representing valleys of a relief pattern and said intervening areas representing lands of said relief pattern and the lands comprising porous expanded polyvinyl chloride of sufficient thickness to provide a pronounced relief pattern effect in contrast with the valleys, at least some of the pattern areas being printed with a color material contrasting with the color of other pattern

areas to provide a contrasting color pattern effect in registry with the relief pattern effect, and the wear layer covering all of the pattern areas and comprising transparent polyvinyl chloride resin so that the color pattern effect is visible.

References Cited

UNITED STATES PATENTS

1,985,480	12/1934	Carpenter	161—6
3,196,030	7/1965	Petry	156—209 X
3,224,894	12/1965	Palmer	117—11
3,239,365	3/1966	Petry	117—11
2,482,154	9/1949	Charlton et al.	117—45
2,920,977	1/1960	Adams	117—15
3,293,094	12/1966	Nairn et al.	156—79

ROBERT F. BURNETT, *Primary Examiner.*

W. POWELL, *Assistant Examiner.*