US00D342084S

United States Patent [19]

Ishikawa

[11] Patent Number: Des. 342,084

[45] Date of Patent: ** Dec. 7, 1993

[54] **VIDEO CAMERA WITH VIDEO TAPE RECORDER**

[75] Inventor: **Yoshifumi Ishikawa**, Yokohama, Japan

[73] Assignee: **Canon Kabushiki Kaisha**, Tokyo, Japan

[**] Term: **14 Years**

[21] Appl. No.: **948,849**

[22] Filed: **Sep. 16, 1992**

[30] **Foreign Application Priority Data**

Mar. 24, 1992 [JP] Japan 4-8237

[52] **U.S. Cl.** **D16/202**

[58] **Field of Search** D16/200-205, D16/208, 213; 352/34, 242, 243; 354/82, 288; 358/229, 906

[56] **References Cited**

U.S. PATENT DOCUMENTS

D. 289,645	5/1987	Kondo	D16/202
D. 304,201	10/1989	Niitsu	D16/202
D. 305,240	12/1989	Kondoh	D16/202
D. 312,090	11/1990	Matsuoka et al.	D16/213
D. 316,419	4/1991	Matsumura	D16/202
D. 316,420	4/1991	Tanaka	D16/202
D. 322,266	12/1991	Ichiyeshi	D16/202
D. 322,267	12/1991	Matsumura	D16/202
D. 322,448	12/1991	Kondo	D16/202
D. 327,698	7/1992	Masuda	D16/202
D. 331,767	12/1992	Yoshida	D16/202
D. 331,935	12/1992	Tanaka	D16/202
D. 331,936	12/1992	Ishikawa	D16/202
D. 332,108	12/1992	Kondo	D16/202
D. 332,958	2/1993	Urushihara et al.	D16/202
D. 335,500	5/1993	Mori et al.	D16/202
4,772,902	9/1988	Inoue et al.	358/229

OTHER PUBLICATIONS

Popular Photography, Jan. 1988, p. 64 (TVC GR-C9 Camcorder).

Primary Examiner—Melvin B. Feifer
Assistant Examiner—Adir Aronovich
Attorney, Agent, or Firm—Fitzpatrick, Cella, Harper & Scinto

[57] **CLAIM**

The ornamental design for a video camera with video tape recorder, as shown and described.

DESCRIPTION

FIG. **1** is a front elevational view of a video camera with video tape recorder showing my new design;
FIG. **2** is a rear elevational view thereof;
FIG. **3** is a right side elevational view thereof;
FIG. **4** is a top plan view thereof;
FIG. **5** is a bottom plan view thereof;
FIG. **6** is a left side elevational view thereof; and,
FIG. **7** is a perspective view thereof.

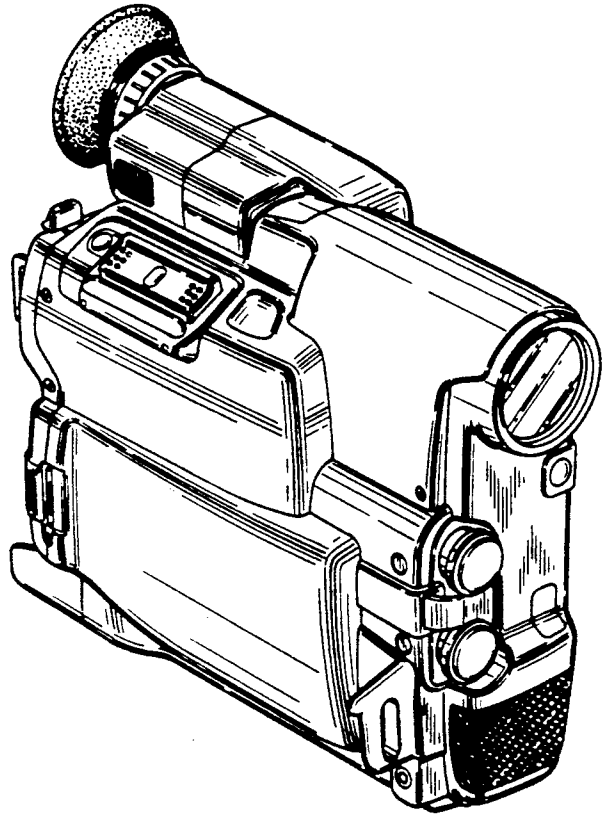

FIG. 1

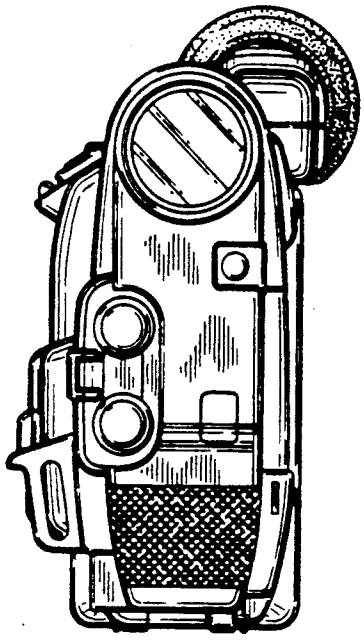

FIG. 2

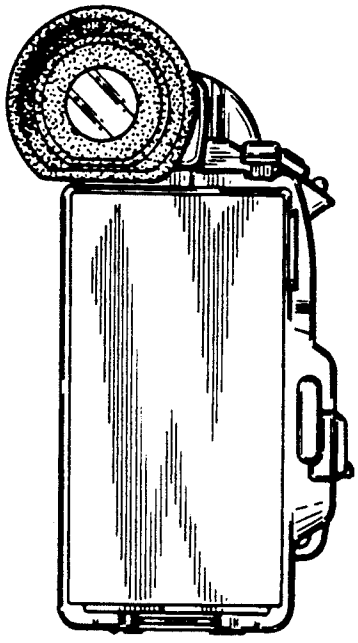

FIG. 3

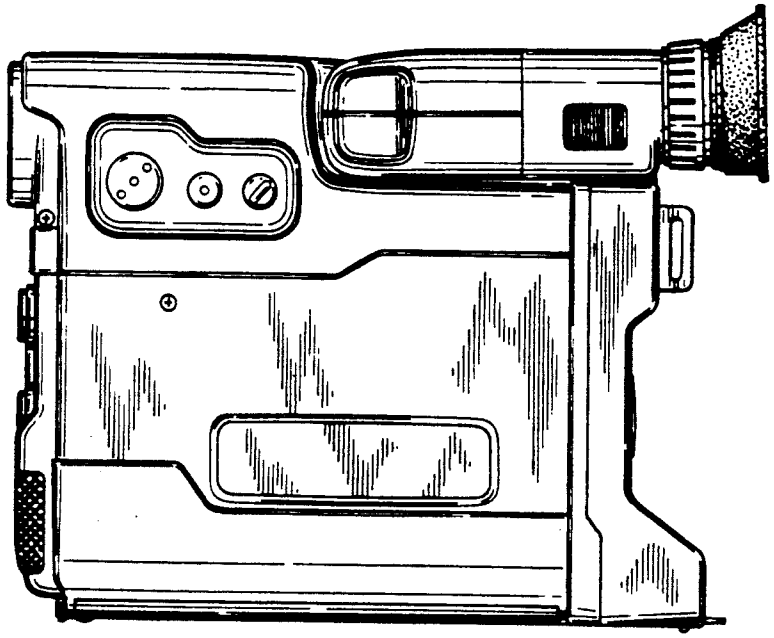

FIG. 4

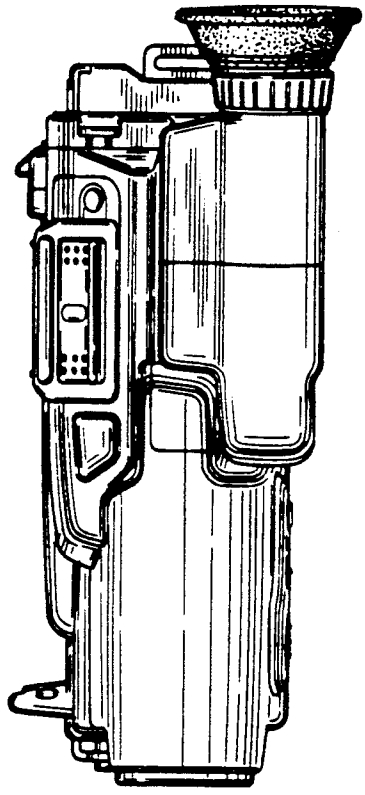

FIG. 5

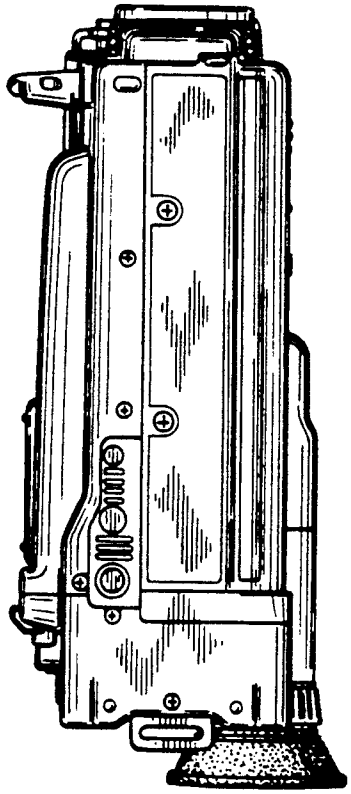

FIG. 6

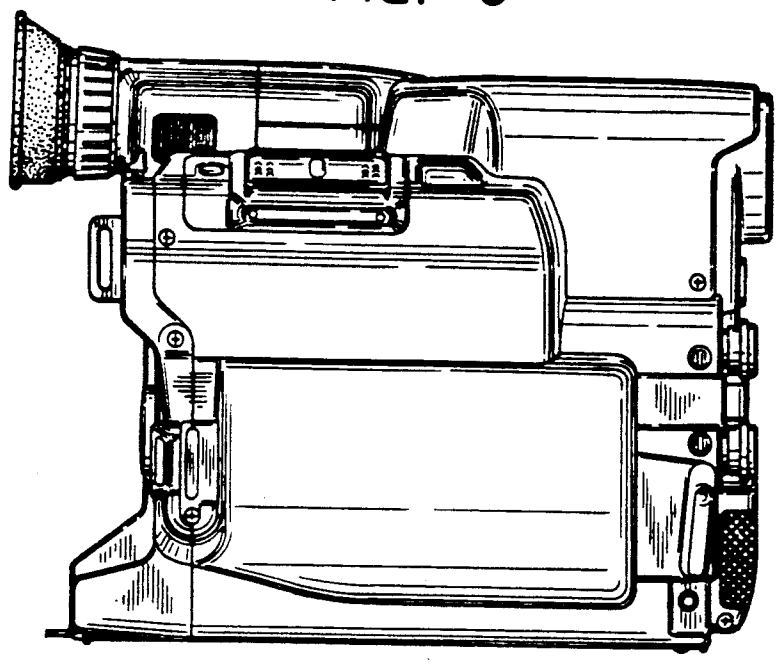

FIG. 7

