Sept. 13, 1955 W. C. GIBSON 2,717,721

DISPENSING MEANS FOR COLLAPSIBLE CONTAINERS

Filed March 30, 1950

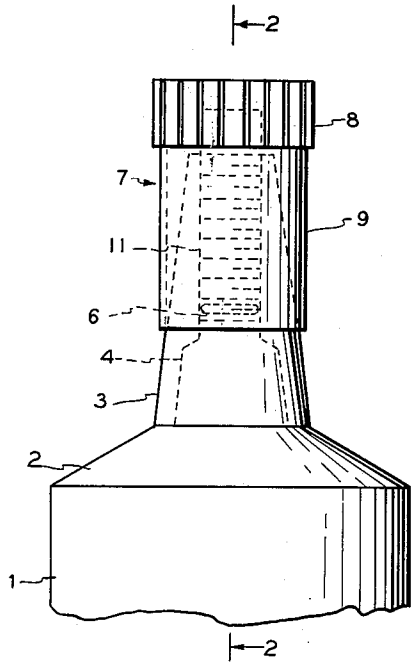

FIG. 1.

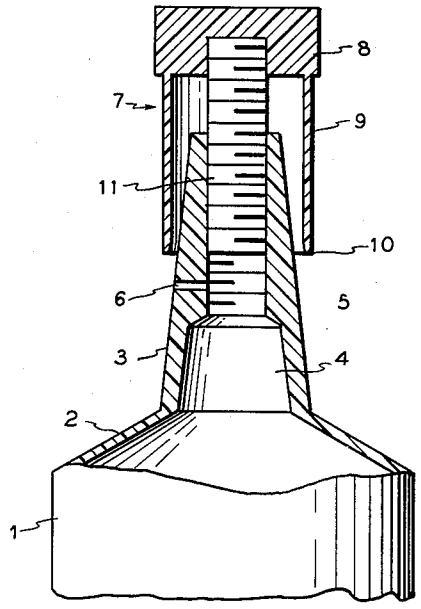

FIG. 2.

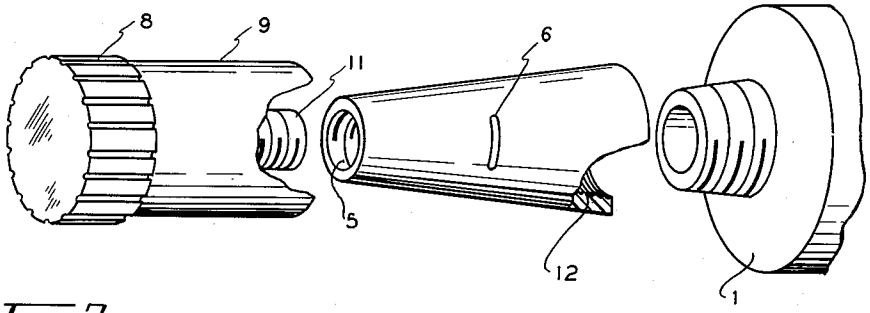

FIG. 3.

INVENTOR
WALTER C. GIBSON

BY Earle D. Hammond.

ATTORNEY

United States Patent Office 2,717,721
Patented Sept. 13, 1955

2,717,721

DISPENSING MEANS FOR COLLAPSIBLE CONTAINERS

Walter Craven Gibson, West Palm Beach, Fla.

Application March 30, 1950, Serial No. 152,767

1 Claim. (Cl. 222—92)

This invention relates to dispensing means for collapsible containers of the type ordinarily employed in packaging and dispensing tooth paste, shaving cream, lubricants and many other thick but flowable materials.

Such containers or tubes are normally provided with a dispensing extension or attachment, or a reduced neck portion having restricted apertures, through which contents of the container is dispensed by pressure applied to the container, and a removable closure cap for closing the container when not in use. Among common faults of such structures are; the necessity of removing the caps for dispensing, and the loss of the caps when separated from the container; the tendency of the container contents to ooze out under pressure thus causing waste beyond the required quantity used; and the lack of provisions for returning unused material to the container from the dispensing portion thereof.

It is an object of this invention to provide a dispensing arrangement for collapsible and other containers that will permit the tube or container to be opened for dispensing its contents without complete removal of the cap, and render impossible loss of the cap in a dispensing operation.

A further object is the provision of a structure which provides a double seal for the dispensing aperture or slot and which also functions to force unused contents downwardly of the neck or nozzle into the container to prevent drying.

Further objects and advantages of the invention will become apparent from the following specification and by reference to the accompanying drawing forming a part thereof, wherein—

Figure 1 is a view in elevation of the invention embodied in a collapsible dispensing tube, the cap being shown in closed position.

Fig. 2 is a vertical axial plane section view of the structure of Fig. 1, the cap being shown in open position.

Fig. 3 is an exploded view of an embodiment of the invention in form of a tube attachment.

Having reference to the drawing **1** is the upper portion of a collapsible container which can be of any material suitable for the particular use, such as metal, plastics, foil or processed paper. At its upper or dispensing end, the container is restricted by upwardly and inwardly sloping wall **2** which joins the base of a dispensing extension or neck **3** which is provided with an axial passage **4** therethrough into the container. This passage is restricted in the upper portion of the extension **3**, and is provided throughout the restricted portion with internal screw threads **5** for accommodation of a cap presently to be described. Adjacent and above the lower end of the screw threaded portion there is provided a lateral dispensing aperture or passage **6** extending through the extension side wall so as to open into the axial passage in the extension to receive and dispense material from the container.

The closure cap **7** has a top flanged portion **8**, a depending cylindrical skirt **9** with inwardly beveled lower

edge **10**, and a central depending screw threaded member **11** within and spaced from the skirt **9** so as to allow passage of the dispensing extension tube between the skirt and the screw threaded member of the cap. Screw **11** is anchored at its upper end by embedding, or other suitable manner of fastening, to the cap top **8**, and, in length, depends axially from the cap top at least substantially coextensive with the annular skirt **9**, although it may, if desired, extend slightly below the skirt portion.

The cap is mounted on the extension by screw threaded engagement of screw **11** thereof within the upper internally threaded portion of the extension. The arrangement is such that clockwise rotation of the cap causes the screw to move downwardly through the passage in the dispensing extension until the lower end of the screw covers and seals off the dispensing slot **6**, and, simultaneously, skirt **9** moves downwardly around the tapered outside surface of the extension until the lower beveled edge of the skirt covers and seals off dispensing slot **6** on the outside of the extension. This provides an inner and outer double seal for the dispensing aperture. For simultaneous closing and sealing, the cap screw is coextensive with the skirt. However, if desired the cap screw may be slightly longer than the skirt to effect earlier inner closing and sealing. As the lower end of screw **11** passes over and below dispensing passage **6**, contents in the extension passageway are forced downwardly of the passage toward the container. This forces all material back toward the container with the small exception of that which may remain in the dispensing slot within the boundaries of the inner and outer walls. However, this is double sealed and cannot dry, and is of very small volume.

From the closed position of the cap only a small counterclockwise turning movement is necessary to free the passage from the container and the dispensing passage for a dispensing operation. However, the long threaded engagement of screw **11** in the extension obviates the necessity of cap removal and prevents loss.

In Fig. 3 there is illustrated a structure substantially as hereinbefore described except that the restricted dispensing unit is illustrated as a tube attachment.

The operation of the device has been made clear in the foregoing description. However, in a dispensing operation the cap is turned only slightly to open the passage and the dispensing aperture. After the desired amount of contents of the container is dispensed, it is turned back to its closed position, in which movement, contents in the extension are positively moved away from the dispensing aperture and forced rearwardly of the extension and to the container.

The foregoing describes a preferred embodiment of the invention but the words employed are those of description rather than of limitation and modifications of the structure are contemplated within the purview of the appended claim without departing from the true scope and spirit of the invention.

I claim:

A collapsible container, a tapered dispensing extension thereon having an upwardly converging outer smooth wall surface and having an internally threaded axial passage therethrough in communication with the interior of the container and a lateral dispensing aperture through the side wall of the extension into said threaded passageway, and a cap having an axially depending threaded member engaging the internal screw threads of the extension and a depending cylindrical annular skirt surrounding the outside of the extension and having a beveled inner lower edge, said cap being movable by a turning movement to close and open said aperture on the inside and on the outside of the extension with the beveled inner edge portion of the skirt engaging the tapered sur-

face extension at the point of and over said lateral dispensing aperture, said threaded member serving to force material rearwardly in said passageway inclosing said aperture.

References Cited in the file of this patent

UNITED STATES PATENTS

1,510,821	Berkley	Oct. 7, 1924
1,521,962	McCormack	Jan. 6, 1925
1,925,466	Simpson	Sept. 5, 1933
1,931,802	Myers	Oct. 24, 1933
2,053,456	Arnold	Sept. 8, 1936
2,143,263	Fisher	Jan. 10, 1939
2,179,423	Pari	Nov. 7, 1939