Jan. 26, 1965 H. C. BRIDGEMAN ETAL 3,166,885

PRODUCTION OF COMPOSITE STRETCH YARNS

Filed June 20, 1963

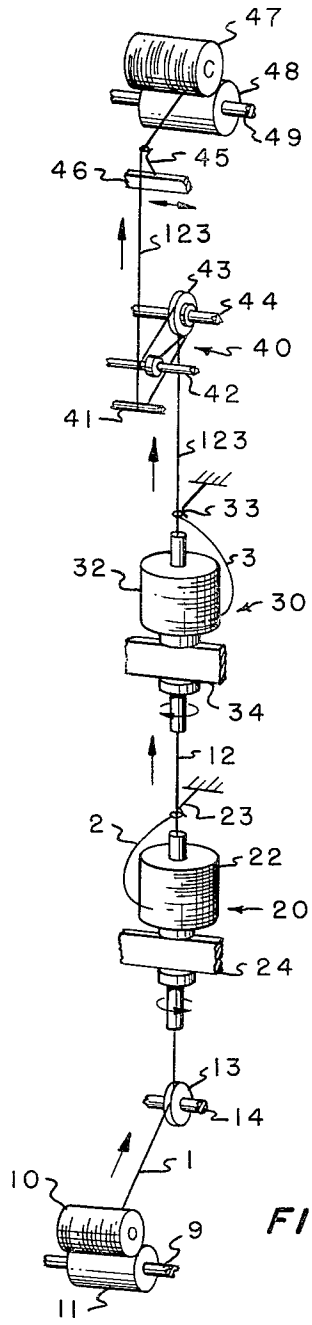

FIG.-1-

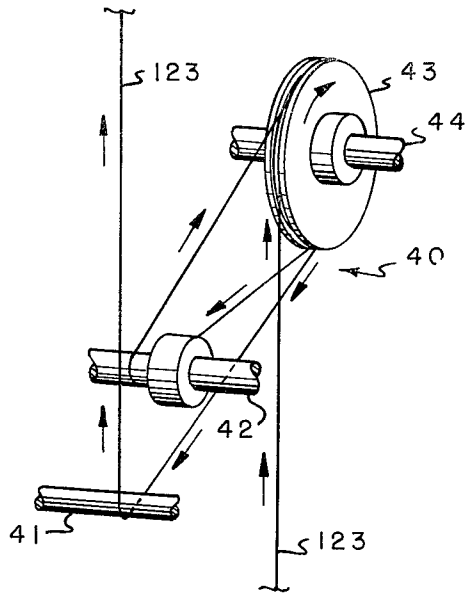

FIG.-2-

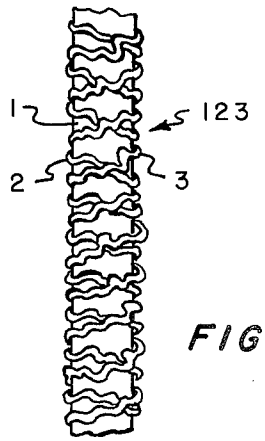

FIG.-3-

INVENTORS
HAGOOD C. BRIDGEMAN
FULTON M. LAMPLEY
BY Llewellyn A. Proctor
ATTORNEY

United States Patent Office 3,166,885 Patented Jan. 26, 1965

3,166,885

PRODUCTION OF COMPOSITE STRETCH YARNS

Hagood Chapman Bridgeman, Marietta, and Fulton M. Lampley, Greenville, S.C., assignors to Deering Milliken Research Corporation, Spartanburg, S.C., a corporation of Delaware

Filed June 20, 1963, Ser. No. 289,199
4 Claims. (Cl. 57—152)

This invention relates to the art of producing covered elastic yarns. In particular, it relates to an improved method for producing a balanced elastic yarn by the wrapping of a strand of polyurethane, constituting a core, with substantially inextensible textile yarn filaments. It also relates to the novel composite yarn produced by such method.

The polyurethane fibers have achieved great commercial acceptance in recent years for use in the manufacture of stretch yarns and fabrics. These stretch yarns are composites and are almost invariably manufactured by helically wrapping a polyurethane strand with a double covering of inextensible textile yarns such as nylon or rayon. The technique employed involves stretching the polyurethane strand under tension to the desired elongation and then tightly wrapping the polyurethane strand, preferably from opposite directions with the textile yarns so that the polyurethane strand itself constitutes a core. In an ideal situation, which unfortunately does not exist, the composite yarns manufactured in this manner should return to the original length of the polyurethane strand before it was tensioned. This ability of the polyurethane strand or the yarn is known as snap back or elastic recovery. Obviously, the lesser the elasticity recovery the lesser the stretch of the composite yarn produced from the polyurethane.

Elastic recovery is, in fact, quite poor for polyurethane. For example, it is far less for polyurethane than for natural rubber. Thus, when polyurethane is stretched, e.g., to just 50% elongation the elastic recovery is only 95%. At higher elongations the recovery is further lessened. But, moreover, the holding of polyurethane under tension produces stress decay. This means that less and less tension is required to hold a specific elongation. Polyurethane is particularly susceptible to stress decay, particularly when elongation is held for long periods of time.

In essentially all practical applications it has been found necessary to cover polyurethane with inextensible textile yarns. A profound decrease in elasticity, however, accompanies the covering of the polyurethane strands. Thus, the stretch of the covered yarn whatever the method is never greater than 300% and, in fact, is rarely greater than about 200% and is usually less. In sharp contrast, however, the normal elasticity of polyurethane is on the order of 600 to 700%. In other words, a naked polyurethane strand will normally stretch 6 or 7 times its original length whereas when it is made into yarn it will only rarely stretch more than about twice the original length of the strand used in the yarn.

The obvious method of obtaining greater stretch is to use naked polyurethane strands. Such usages however are greatly limited because, inter alia, of the complex problems associated with the spinning of polyurethane strands into a fabric. Thus, on a knitting machine it is vital that tension be applied upon a yarn to effect its passage through the guides, needles and other machine subcomponents but it is also essential that the tension be uniform to achieve smooth operation and to produce a fabric of uniform and smooth appearance. Such uniformity of tension when spinning with naked strands of polyurethane, however, does not occur. Instead, extreme variations in tension accompany any practical knitting operation, this making such operation unfeasible.

The loss of elasticity resulting through the necessity of covering the yarn is obviously extremely undesirable and the improvement of the stretch properties of covered yarn is a highly worthwhile objective.

The present invention therefore has for its object the amelioration of these and other prior art deficiencies and to advance the state of the art by providing a new and improved method for producing a covered polyurethane yarn of greater elasticity. It is also an object to provide a method for packaging polyurethane yarns smoothly and uniformly under less tension. In particular, it is an object to provide a method which will helically wrap and ply two continuous synthetic inextensible continuous filament textured fibrous yarns about a polyurethane yarn core from opposite directions to produce high stretch doubly sheathed balanced stretch yarn. Yet another objective is to produce a new and novel doubly sheathed balanced stretch yarn.

These and other objects are achieved in accordance with the present invention which contemplates an improved novel method of covering a polyurethane strand with synthetic inextensible continuous filament textured textile yarns to produce a new and novel yarn composite of greater elasticity than possessed by similar prior art yarns.

Pursuant to such method a running length of a polyurethane strand is continuously supplied under tension and stretched between a polyurethane supply source and a tension reduction source. At a location between the supply source and tension reduction source is first applied upon the polyurethane strand an inner sheath or covering by continuously spirally wrapping the polyurethane strand with a first synthetic inextensible continuous filament textured textile yarn having an S torque therein, and then, at a second location, is applied an outer coating by wrapping about the first yarn from the opposite direction a second inextensible continuous filament textured textile yarn which has a Z torque therein. Following these steps the tension upon the composite yarn is reduced, the yarn relaxed and then taken up by the yarn take-up source. The use of an S torque inner wrapping and a Z torque outer wrapping, both wrappings being composed of synthetic continuous filament textured fibers, and as well tension reduction and take-up are key and novel features of the new and novel method combination. These features, especially that of reduced tensioning can be readily controlled within limits to provide yarn of high stretch properties of preselected elasticity.

In accordance with the preferred practice of this invention tension is sufficiently reduced after the composite yarn is formed and prior to take up so that the length of the said composite yarn is reduced or contracted in amount ranging from about 300% to about 500% of its tensioned length. This means that the composite yarn which is taken up is from about one-third to about one-fifth of the length of the tensioned polyurethane strand applied to constitute the core of the yarn. Pursuant to such relaxation technique, and in accordance with the unique wrapping steps an elasticity of from about 300 to about 500% stretch is produced.

That elasticity can be improved by such over-feed technique when using these specific types of materials as an S torque inner wrapping and Z torque outer wrapping rather than two wrappings of the same torque, i.e., both Z, is indeed surprising. In fact, even when the identical types of materials as used pursuant to this invention are applied in just opposite fashion the elasticity of the resultant yarn is not significantly improved. In other words, if a Z torque material is applied as the inner wrapping and an S torque material as an outer wrapping and the composite yarn overfed as prescribed the elasticity of the composite yarn is not significantly

improved. The reason for the improved elasticity pursuant to the practice of the present invention is not understood.

These and other features of the invention will be better understood by reference to the accompanying drawings which illustrate practical devices for carrying out the novel method. In the drawings:

FIGURE 1 is a schematic view of suitable mechanism for forming the highly elastic polyurethane composite yarn;

FIGURE 2 is an enlarged view of a practical arrangement for providing positive tension reduction of the composite yarn and for its take-up in relaxed state; and

FIGURE 3 is a segment of yarn produced in accordance with the process.

Referring to FIGURE 1 is shown a polyurethane supply package **10** from which is extended polyurethane strand **1** which is wrapped about the lower star wheel **13**, rotatably mounted upon an axle **14**. The polyurethane strand **1** is supplied tangentially from the supply package **10** without twisting by rotation of the roller **11**, which turns upon an axle **9**. Polyurethane strand **1** is tensioned between the lower star wheel **13** and upper star wheel **43**, the latter being rotatable about its axle **44**. Located between the lower star wheel **13** and upper star wheel **43** is a first yarn covering device **20** which helically wraps from an **S** direction about the polyurethane strand **1** and inner inextensible synthetic continuous filament textured yarn **2** which has an **S** torque therein. The yarn **2**, from supply roll **22** is passed through guide **23**, and is continuously spirally wrapped upon yarn **1** by the rapid rotation of roll **22** to form yarn **12**. The supply roll **22** is axially and rotatably mounted upon frame **24** and is turned by belt means not shown. Above the device **20** is located a second yarn covering device **30** of similar structure and function except that this device applies an outer inextensible synthetic continuous filament textured **Z** torque yarn **3** from a **Z** direction, or direction opposite that of device **20**. The yarn **3**, which is passed through guide means **33**, is continuously and rapidly unwound from supply package **32** upon yarn **12** by rotation of supply package **32** upon the frame **34**. Rotation of the package **32** is effected by drive means not shown. The composite yarn **123** moves upwardly from twisting devices **20**, **30** to the overfeed device **40**.

The overfeed device **40** is more clearly shown by reference to FIGURE 2. The composite yarn **123** which has moved upwardly through twisting devices **20**, **30** is brought over the upper star wheel **43** and is wrapped a multiple number of times between the upper star wheel **43** and roller **42**, then under and upwardly around the immovable bar **41** and is thence passed through guide **45** mounted on the movable frame **46**. From guide **45** the yarn **123** is passed to the take-up package **47** which is driven by roll **48** mounted on axle **49**. The purpose of the arrangement is to maintain tension upon the polyurethane strand between the bottom star wheel **13** and top star wheel **43** but yet to provide for a reduction in tension between the upper star wheel **43** and the take-up roll **47**. Tension reduction can be conveniently controlled in any given set up of this type by varying the total friction upon the composite yarn **123** between the take-up roll **47** and the upper star wheel **43** as by the number of wraps. By providing a pre-selected amount of tension reduction between the upper star wheel **43** and take-up roll **47**, the elastic properties of the composite yarn **123** can be closely regulated. In accordance with such arrangement the composite yarn **123** is then permitted to relax or decrease in length so that in effect an overfeed arrangement exists between the length of composite yarn **123** supplied to the upper star wheel **43** and that length of yarn **123** which is actually wound upon the take-up roll **47**. Thus, a greater length of composite yarn **123** is fed to the upper star wheel **43** than that taken up by take-up roll **47** and by pre-selection of overfeed ratios the elasticity of the composite yarn **123** can be pre-determined and of greater elasticity. The yarn of this invention, in fact, possesses greater elasticity than heretofore thought possible for doubly wrapped polyurethane strands. That such profound advantages can be obtained by such technique is indeed surprising. In fact, the greater the overfeed ratio the greater the elasticity of the yarn composite produced in accordance with this invention.

FIGURE 3 shows a segment of the composite yarn **123** produced in accordance with this invention. As shown, about an elastic polyurethane thread **1** is helically wrapped as an inner and outer layer synthetic non-elastic continuous filament textured yarns. The inner covering is composed of yarn **2** having an **S** torque and the outer covering of yarn **3** having a **Z** torque.

Pursuant to prior art techniques wherein substantially no relaxation of the composite yarn was applied to the resultant yarns at take-up and wherein **Z** torque wrappings were applied the elongation of the composite yarn ranged generally from about 100 to about 200%. In sharp contrast, however, pursuant to this invention yarn of similar composition can be produced which provides unique elongation properties ranging in fact from about 300% to about 500%, and higher.

The following non-limiting example demonstrates the salient features of the present invention, and shows the elastic properties of an elastic yarn produced pursuant to this invention.

Example

A 140-denier polyurethane strand from an elastic supply package is passed two times around the lower star wheel and thence upwardly through the **S** and **Z** twist mechanisms to the upper star wheel and is initially tensioned under a force of 15 grams between the lower and upper star wheels. One wrap is also made about the upper star wheel and one wrap around a standard one-half inch diameter roller adjacent and in front of the star wheel and a last wrap is brought from the star wheel about a stationary bar and thence is passed to the take-up roll. The polyurethane strand is fed from the elastic supply package upon the bottom star wheel by a drive wheel or roller.

In operation, about the polyurethane strand is wrapped, 121 wraps to the inch, in an **S** direction with a 20-denier textured continuous filament of nylon. This covering yarn exhibits an **S** torque such as those exhibited by false twist systems.

Upon the inner wrapping is then applied an outer wrapping, 87 wraps to the inch, in a **Z** direction, with a 20-denier textured continuous filament of nylon. This covering exhibits a **Z** torque of the type exhibited by false twist systems. The tension upon the composite yarn between the **Z** twister and the upper star wheel, amount to a total of about 45 grams. This tension is reduced to a tension of one or two grams at the take-up roll so that the composite yarn is relaxed and its length reduced prior to take-up.

The ratio of the linear velocity of the yarn to the upper star wheel to the linear velocity of the yarn taken up by the take-up roll is 5:1. In other words, this provides an overfeed ratio of 5:1 between the upper star wheel and the take-up roll. The elastic yarn produced in this manner has an elasticity of 400%.

In sharp contrast, when the foregoing run is repeated in precise detail except that the tension between the upper star wheel and the take-up roll is not reduced; or, when the ratio corresponds to 1:1 and there is no overfeed the elasticity of the composite yarn produced is only 100%.

Best results are obtained when an overfeed ratio of about 4:1 to about 6:1 is provided. Greater overfeed ratios will provide slightly improved elasticity but elastic properties greater than about 450 to about 500% are

only slightly improved by further increased overfeed ratios.

The inextensible textile yarns applied are of substantially non-elastic or inextensible nature and are of synthetic origin. The textile yarns must be of a continuous filament variety and must be textured. Exemplary of such materials are rayon, polyesters, polypropylene, polyethylene and the like.

While polyurethane has been mentioned herein as constituting the core yarn of the elastic yarn composite, it is apparent that the invention is applicable for use with elastic stretch yarns having properties similar thereto.

It is apparent that the present invention is susceptible to some variation without departing from the spirit and scope thereof.

Having described the invention, what is claimed is:

1. A method of producing a balanced composite elastic yarn comprising continuously supplying a running length of a polyurethane strand stretched under tension, continuously helically wrapping the stretched polyurethane strand in one direction with a first synthetic inextensible continuous filament textured textile yarn having an S torque therein, and then helically wrapping about the first inextensible yarn from the opposite direction a second synthetic inextensible continuous filament textured textile yarn having a Z torque therein to produce a doubly covered composite yarn, and then reducing the tension upon

the composite yarn and contracting the same and feeding the contracted yarn to a yarn take-up.

2. The method of claim 1 wherein the tension is reduced sufficient to permit the composite yarn to contract from about 300 to about 500% of its original running length under tension.

3. A composite elastic yarn comprising a polyurethane strand upon which is plied by helically wrapping about the polyurethane strand from one direction an inner covering of a synthetic inextensible continuous filament textured textile yarn having an S torque therein, and from the opposite direction a synthetic inextensible continuous filament textured textile yarn having a Z torque therein.

4. The composite elastic yarn of claim 3 wherein the inner and outer wrappings are of nylon.

References Cited in the file of this patent

UNITED STATES PATENTS

2,587,117	Clay	Feb. 26, 1952
2,690,047	Long	Sept. 28, 1954
3,069,883	Burleson et al.	Dec. 25, 1962
3,078,653	Marshall	Feb. 26, 1963
3,090,277	Schmittmann	May 21, 1963
3,115,745	Lathem et al.	Dec. 31, 1963

FOREIGN PATENTS

1,160,972	France	Mar. 10, 1958