S. G. H. ORELL.

BED CARRIAGE.

APPLICATION FILED OCT. 6, 1921.

1,430,675. Patented Oct. 3, 1922.

Fig. 1.

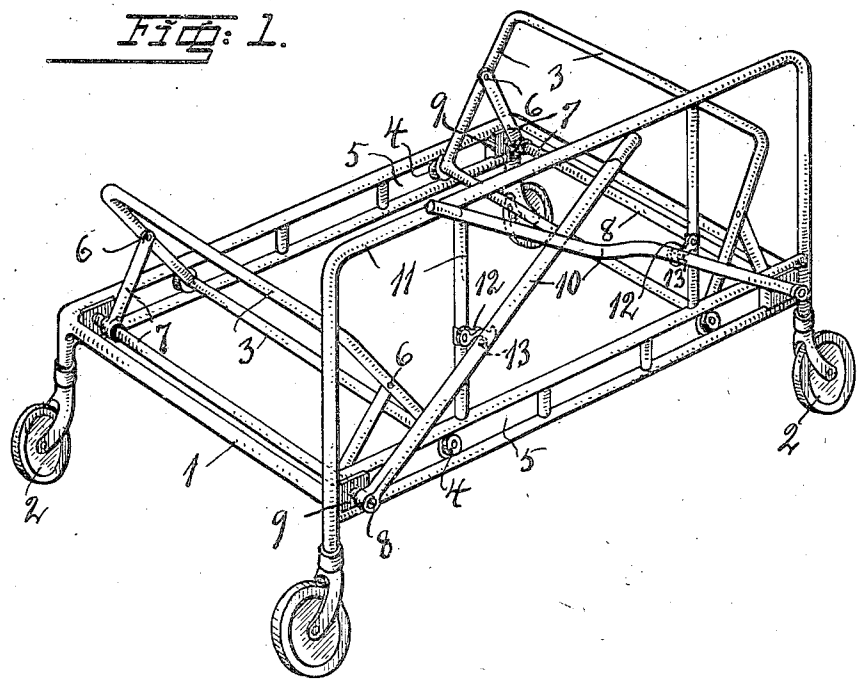

Fig. 2.

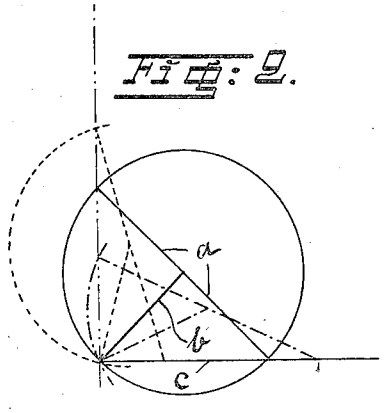

Fig. 3.

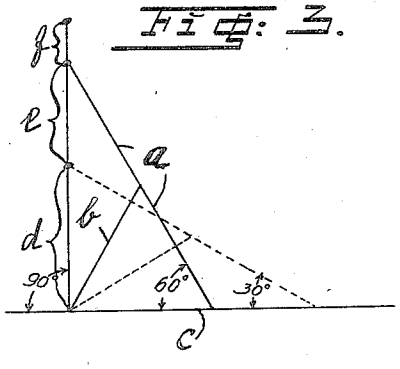

INVENTOR:

Svante H. G. Orell

By Wm Wallace White

ATT'Y.

Patented Oct. 3, 1922. 1,430,675

UNITED STATES PATENT OFFICE.

SVANTE GUSTAF HERMAN ORELL, OF STOCKHOLM, SWEDEN.

BED-CARRIAGE.

Application filed October 6, 1921. Serial No. 505,862.

To all whom it may concern:

Be it known that I, SVANTE GUSTAF HERMAN ORELL, a subject of the King of Sweden, residing at Stockholm, Sweden, have invented new and useful Improvements in Bed Carriages, of which the following is a specification.

The present invention relates to a bed-carriage having gables for elevating the beds and supporting them at a desired level said gables being movable at their lower ends in guides in the frame of the carriage in a direction to and from each other and being hinged each to a supporting member above their lower ends said supporting members in their turn being hinged to the frame of the carriage. By rotating the supporting members upon the frame of the carriage the raising and lowering of the gables will be effected. By hinging the gables to the supporting members at the half height of the former and making the height of the supporting members correspond to the half height of the gables, the upper edges of the gables will move in a vertical plane during the raising or lowering of the gables. By this system of elevation mechanism distinct advantages are gained, inasmuch as the bed during transport rests with the steadiest part of its bed-frame on the bed-carriage. The bed-carriage can be built in a very stable fashion, leaving room for the eventually downward-sinking portions of the bed, and the supporting-parts will possess a certain flexibility, all of which combine to ensure the bed being moved along smoothly during the process of transport. Further, if so desired, great elevation height can be obtained and the elevation—by reason of the elevation mechanisms being managed each one for itself—can be carried out with relatively little power and the bed-carriage can be so designed that it can be kept under a bed in the hospital ward of the department. From a sick-nursing point of view it is also an advantage that the carriage does not take up any extra space in the hospital ward and that the nursing-staff can manage it and attend to the transport of the patients, but with this difference from the litter-carriage, namely, that the patient does not require to be lifted more than to and from the examination and operation tables.

The invention is illustrated on the accompanying drawing. Fig. 1 is a perspective view of a bed-carriage according to the invention. Figs. 2 and 3 are diagrams. 1 is the frame of the bed, 2 frame-supporting wheels, 3 the two gables, which are movable at their lower ends by means of rollers 4 in guides 5 in the frame 1 in a direction to and from each other. The gables are hinged at 6 to the supporting members 7, which have a lower shaft 8 journalled in stationary bearings 9 in the frame 1. The shafts 8 and bearings 9 form the hinged connection between the gables and the frame. On one side of the bed-carriage there are two levers 10 attached to the ends of the shafts 8. By means of these levers the shafts 8 can be rotated for raising or lowering the gables. 11 is a side frame, on which hooks 12 are mounted to be turned in a vertical plane to catch a pin 13 on the levers 10 for maintaining the latter in a desired position with the upper edges of the gables supporting the bed at the desired level. For releasing the hooks 12 from the pins 13 the hooks may be provided with a handle (not shown) extending outside the lever in the locked position. In the example shown the gables are hinged to the supporting members at the half height of the former and the height of the supporting members 7 is equal to the half height of the gables. If desired other means can be substituted for the levers 10 to rotate the supporting members 7. The both members 7 can also be connected with each other (not shown) to be rotated in unison by means of a single lever or other means. Many other variations of the details can be made within the scope of the invention.

In Fig. 2 the gable is represented by line a, the supporting member by line b and the guides by line c. b is connected with a at its half height and $b=\frac{a}{2}$. From the full and dotted lines in this figure it is seen that the upper end of a, i. e. the upper edge of the gable, moves in a vertical plane. This fact is based on Euclides Prop XXXI Tome III. From Fig. 3 it is seen that ,when b is turned upwards from a position where a lies on c, the upper end of a will move a distance d for the first 30°, a distance e for the next 30° and a distance f for the last 30°. d is greater than e and e greater than f. Consequently, in the lower positions of the gables and their supporting members there will be a greater vertical movement of the

upper edge of the gable for a certain angle movement of the lever than in the higher positions. In the practical execution of the bed-carriage this may be of importance to bear in mind, as on account of the space it may be advantageous to obtain a considerable elevation with but slight movement of the lever.

What I claim is:—

1. A bed-carriage having gables for elevating the beds and supporting them at a desired level said gables being movable at their lower ends in guides in the frame of the carriage in a direction to and from each other and being hinged each to a supporting member above their lower ends, said supporting members in their turn being hinged to the frame of the carriage for the purpose of raising and lowering the gables by rotating the supporting members upon the frame of the carriage.

2. A bed-carriage according to claim 1, characterized in that the gables are hinged to the supporting members at the half height of the former and that the height of the supporting members corresponds to the half height of the gables, in order that during the raising or lowering of the gables their upper edges may move in a vertical plane.

In testimony whereof I have signed my name to this specification.

SVANTE GUSTAF HERMAN ORELL.