C. BERGENER.

TUBULAR LANTERN.

APPLICATION FILED MAR. 30, 1909.

962,114. Patented June 21, 1910.

Fig. 1.

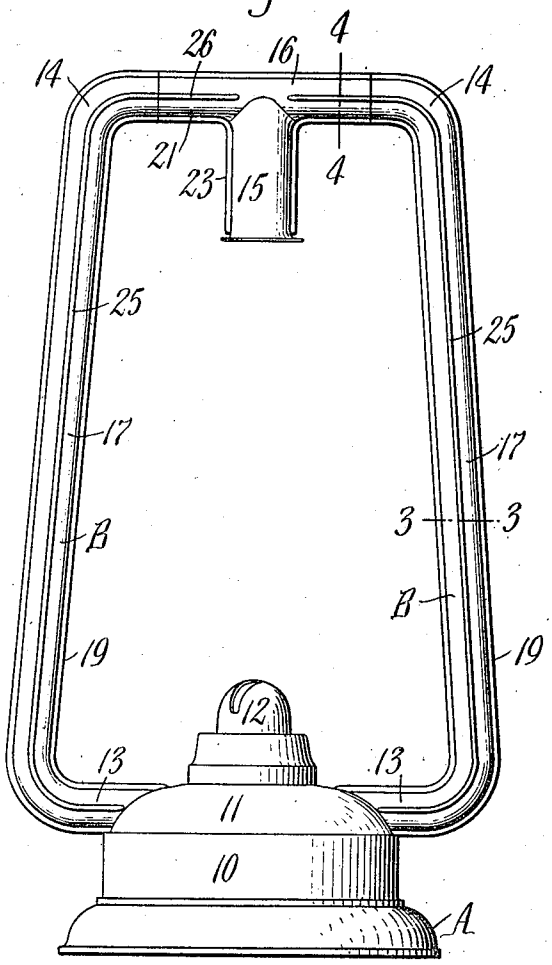

Fig. 2.

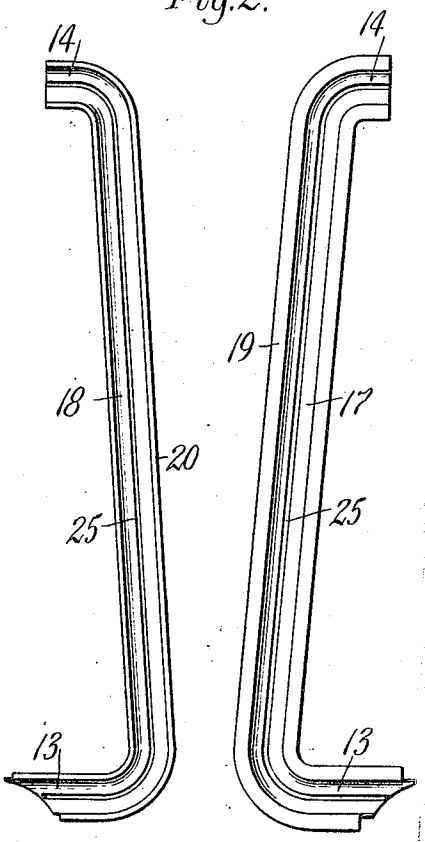

Fig. 3.

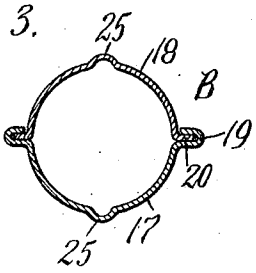

Fig. 4

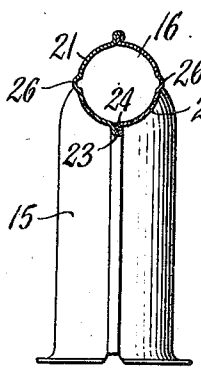

Witnesses:

E. A. Volk.

A. G. Dimond.

Inventor.

by Charles Bergener

Wilhelm, Parker & Hard,

Attorneys.

UNITED STATES PATENT OFFICE.

CHARLES BERGENER, OF ROCHESTER, NEW YORK, ASSIGNOR TO C. T. HAM MANUFACTURING COMPANY, OF ROCHESTER, NEW YORK.

TUBULAR LANTERN.

962,114. Specification of Letters Patent. Patented June 21, 1910.

Application filed March 30, 1909. Serial No. 486,807.

To all whom it may concern:

Be it known that I, CHARLES BERGENER, a citizen of the United States, residing at Rochester, in the county of Monroe and State of New York, have invented a new and useful Improvement in Tubular Lanterns, of which the following is a specification.

This invention relates to the construction of tubular lantern frames and particularly to that class of frames in which the tubes are each composed of two stamped half-tubes, each of which is of half-round cross section and which are secured together by seams extending along the inner and outer edges of the half-tubes.

The invention has for its object to stiffen the tubular frame and to avoid imperfections in the shape of the tubes.

In the accompanying drawings: Figure 1 is an elevation of a tubular lantern frame embodying this invention. Fig. 2 is an elevation showing the two constituent half-tubes of a tube preparatory to securing the half tubes together. Fig. 3 is a cross section in line 3—3, Fig. 1, on an enlarged scale. Fig. 4 is a vertical section in line 4—4, Fig. 1, on an enlarged scale.

Like reference characters refer to like parts in the several figures.

A represents the base of the lantern frame comprising the oil pot 10, the air chamber 11 thereon, and the burner 12.

B represents the air tubes formed each with a lower elbow portion 13 which connects with the air chamber and with an upper elbow portion 14.

15 represents the upright central tube formed with an upper horizontal tube section 16 which is interposed between the upper elbow portions 14 of the two tubes and which forms with the central tube a T piece.

Each air tube is composed of two half-tubes 17, 18, of half-round cross section and provided along their inner and outer edges respectively with flanges 19, 20, which are united in the form of a seam when the halves have been placed against each other, one of the flanges 19 being so wide that it can be closed around the opposing flange 20 of the other half-tube. The T piece comprising the central tube 15 and the horizontal tube 16 is similarly composed of two stamped halves 21, 22, united by seamed flanges 23, 24.

25 represents a hollow rib which is formed lengthwise in each half-tube and centrally on the half-round surface thereof or midway between the edges thereof and extending preferably from end to end of the tube, inclusive of the elbow portions. These ribs serve not only to strengthen and stiffen the tube but also to draw or stretch the sheet metal as it is being shaped between the dies in stamping the half-tube out of a flat blank, and thereby avoid the buckling of the sheet metal in being stamped, which occurs more or less in forming this class of tubes and causes flat or otherwise misshapen spots in the surface of the tube and impairs the strength as well as the appearance of the same.

The upper ends of the tubes may be connected, as usual, with a T-piece, as shown in Fig. 1, comprising a horizontal and a vertical tube and composed of two halves stamped of sheet metal and secured together by seams on opposite sides. Each half has its horizontal portion formed with a hollow longitudinal rib 26 formed in line with the horizontal upper end portion of the rib 25 so as to form a continuation of the latter.

I claim as my invention:

1. A tubular lantern having tubes which are each composed of two substantially half-round half-tubes, stamped of sheet metal and secured together by seams on the inner and outer sides of the tubes, and each half-tube being formed between said seams with a hollow longitudinal rib thrown out on the half-round surface of the half-tube, substantially as set forth.

2. In a tubular lantern frame, the combination of side tubes, each composed of two substantially half-round stamped half-tubes of sheet metal secured together by seams on the inner and outer sides of the tube, each half-tube being provided between the seams with a hollow longitudinal rib thrown out on the half-round surface of the half-tube, and a T-

piece interposed between the upper ends of the tubes, said piece comprising a horizontal and a vertical tube and being composed of two halves stamped of sheet metal and secured together by seams on opposite sides, each half having its horizontal portion formed with a hollow longitudinal rib thrown out on each side in line with the upper end of the corresponding rib on the side tube, substantially as set forth.

Witness my hand in the presence of two subscribing witnesses.

CHARLES BERGENER.

Witnesses:

GEO. W. HAM,

LYMAN S. PHIPPS.