Aug. 20, 1968 T. H. ELTING 3,397,795

MEANS FOR DISPLAYING GOLF CLUBS

Filed Aug. 22, 1966

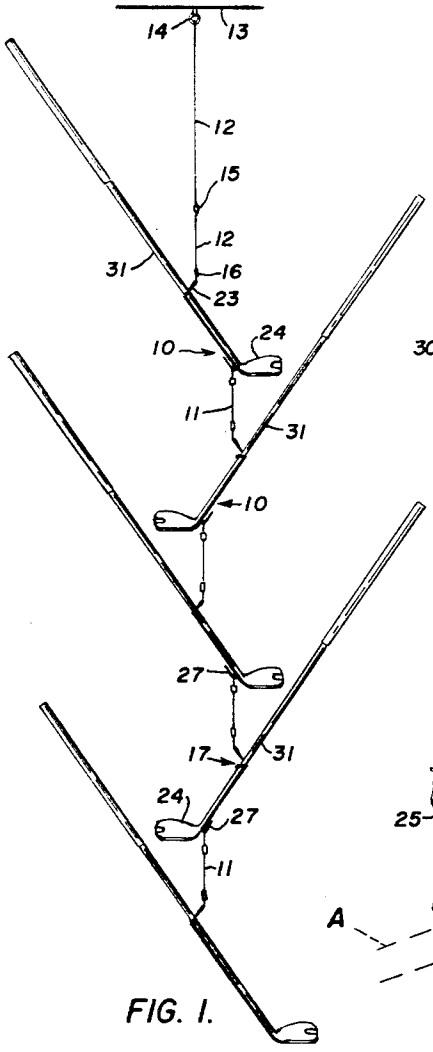

FIG. 1.

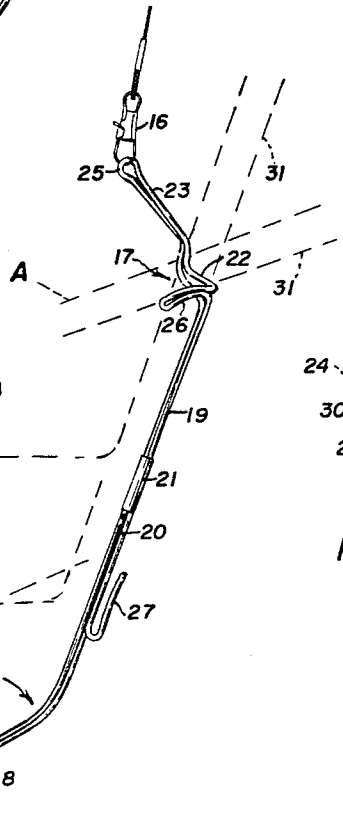

FIG. 3.

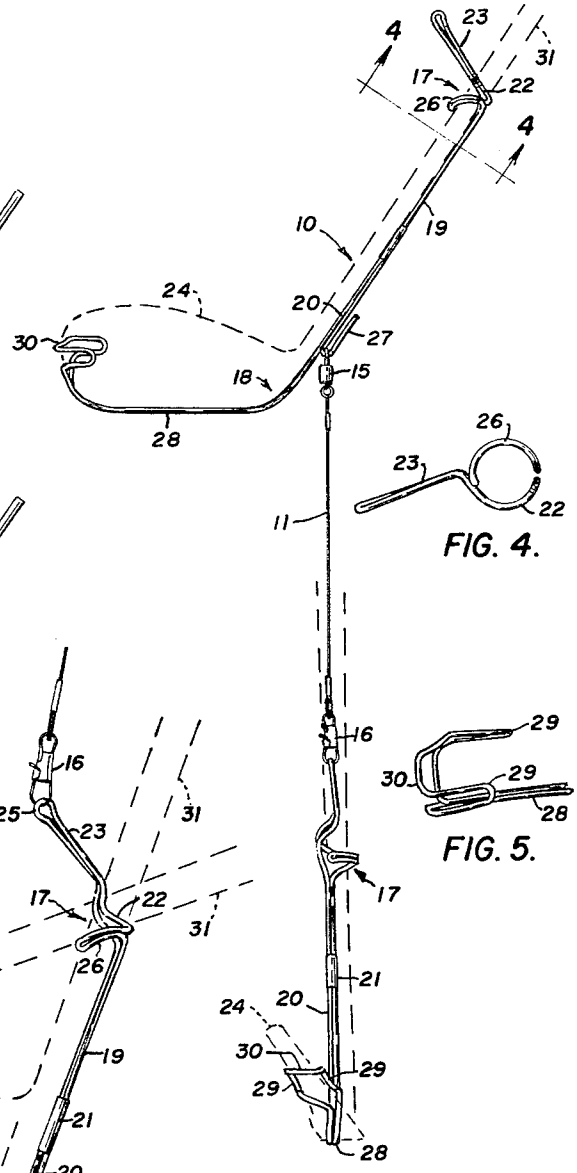

FIG. 2.

FIG. 4.

FIG. 5.

THOMAS H. ELTING
INVENTOR.

BY Herbert J. Brown

ATTORNEY

United States Patent Office

3,397,795
Patented Aug. 20, 1968

3,397,795

MEANS FOR DISPLAYING GOLF CLUBS

Thomas H. Elting, 3024 Sandage,
Fort Worth, Tex. 76109

Filed Aug. 22, 1966, Ser. No. 574,159
3 Claims. (Cl. 211—60)

ABSTRACT OF THE DISCLOSURE

A mobile display for golf clubs comprising a multiple of club head and shaft engaging holders suspended one above the other and whereby the display clubs will turn in the presence of the air currents.

This invention relates to means for displaying golf clubs in retail stores, pro-shops and other places where golf clubs are sold. Generally, the invention is directed to a mobile display, that is, one wherein components are suspended one from another and individually move and turn when in the presence of air currents.

The primary object of the invention is to provide means whereby golf clubs are attractively displayed.

A particular object of the invention is to provide inconspicuous supporting means in a mobile display of golf clubs.

Another object is to provide adjustable supporting means in a mobile display of golf clubs whereby each club may be caused to assume its normal angle such as when a golfer is addressing a ball.

A further object is to provide means in a mobile display of golf clubs whereby an entire set of clubs may be progressively arranged, one above the other, according to number.

These and other objects of the invention will become apparent from the following description and the accompanying drawing, in which:

FIGURE 1 is an elevational view of a mobile display according to the invention, but showing only some of a set of irons.

FIGURE 2 is an enlarged elevational and partly perspective view of two of the connected club holders and showing clubs supported by means of dotted lines.

FIGURE 3 is a further enlarged and partly perspective view of a single holder and showing, by means of dotted lines, steps for mounting a club to be displayed.

FIGURE 4 is a transverse sectional view taken on line 4—4 of FIGURE 2, and

FIGURE 5 is a broken plan view taken on line 5—5 of FIGURE 3.

Preferably, the present display is made primarily of wire so as to be inconspicuous, but to those versed in the art it will be apparent that other materials may be used, for example, formed sheet metal. While the golf clubs shown in the drawing are irons, it is also to be understood that the invention is applicable to woods, not shown, by merely changing dimensions.

A display according to the invention includes multiple holders **10** connected one above the other by small diameter wires, cords or cables **11** and **12**. The uppermost cable **12**, which is longer than the other cables **11**, is shown attached to a ceiling **13** by a ring **14**. A swivel **15** is connected in the length of the upper cable **12**, and

which cable has a snap link **16** on its lower end. Similarly, the remaining cables **11** have swivels **15** and snap links **16** on their upper and lower ends.

Each holder **10** is comprised of upper and lower portions **17** and **18** which, in the preferred form of the invention, has upper and lower arms **19** and **20** in side by side relation and has a band **21** therearound whereby the two arms may be longitudinally adjusted. Each upper portion **17** is comprised of a single length of wire, a straight length of which is part of the upper arm **19**. The last referred to length of wire is bent upwardly and forwardly to define a near half circle **22**, and thence extends upwardly and forwardly and then back on itself to provide a lateral angular arm **23**. "Forwardly" as last referred to has reference to the position of the head **24** of the golf club to be displayed. The loop **25** of the arm **23** provides means for attaching a snap link **16**. The length of wire extends downwardly from the arm **23** where it is bent angularly, downwardly, forwardly and arcuately to provide a shaft engaging curved finger **26**. As best shown in FIGURE 4, the bend **22** and finger **26** define a circle. The remaining length of wire is a part of the connecting arm **19** and terminates in a hook **27** below the band **21**.

As mentioned, the lower portion **18** of the holder **11** has a connecting arm **20**. The entire lower portion **18**, like the upper portion **17**, is comprised of a single length of wire and the end portions are straight and in side by side relation to form the connecting arm **20**. The wire lengths continue downwardly and forwardly, at **28**, to conform with and support the bottom of the club head **24**, and then diverge where they are bent back and then forward to provide club head holding fingers **29**. The fingers **29** engage the face and back of the head **24** and the remaining connecting portion **30** engages the end of the head. As best shown in FIGURE 5, the finger **29** engaging the back of the head is offset with reference to length of the support portion **28** whereby the head is engaged along the bottom near its face.

As shown in FIGURE 3, the golf club shaft **31** is placed in the half circle **22** and on the shaft engaging finger **26** as the first step A, after which the shaft is raised as step B. The head **24** is then moved downwardly, as step C, so as to be received between the head holding fingers **29** and to rest upon the supporting portion **28**. A multiple of clubs are so installed in multiple holders **10** which are connected by cables **11** in the manner described. In order to make the clubs hang at the desired angle, the connecting arms **19** and **20** of the holder **10** are longitudinally adjusted.

The invention is not limited to the exemplary construction herein shown and described, but may be made in various ways within the scope of the appended claims.

What is claimed is:

1. Means for displaying golf clubs, said means being comprised of multiple holders for suspension one above the other, each said holder having means for engaging a portion of the head and the shaft of the club to be displayed and each having a lateral angularly projecting arm on its forward upper portion, suspension means on the lower portions of said holders except the lowermost holder and cords connecting said lateral arms and said suspension means.

2. Means for displaying golf clubs as defined in claim 1 and wherein said means for engaging a portion of the head and the shaft of the club to be displayed include fingers engaging the face and back of said head at the outer end thereof and at least one finger engaging said shaft.

3. Means for displaying golf clubs as defined in claim 1 and wherein each said holder is comprised of upper and lower portions and including means longitudinally adjusting said portions relative to each other.

References Cited

UNITED STATES PATENTS

928,195	7/1909	Henderson	211—119
2,221,659	11/1940	Wilkie	211—149
2,244,790	6/1941	Maier	248—327 X
3,147,988	9/1964	Schairer	211—60 X
3,265,246	8/1966	Messenger	211—119 X

CHANCELLOR E. HARRIS, *Primary Examiner.*