K. R. WESTIN.

MEANS FOR LOOSENING THE TUBE FROM THE MANDREL IN THE MANUFACTURE OF TUBES.

APPLICATION FILED NOV. 16, 1912.

1,068,549. Patented July 29, 1913.

2 SHEETS—SHEET 1.

Fig. 1.

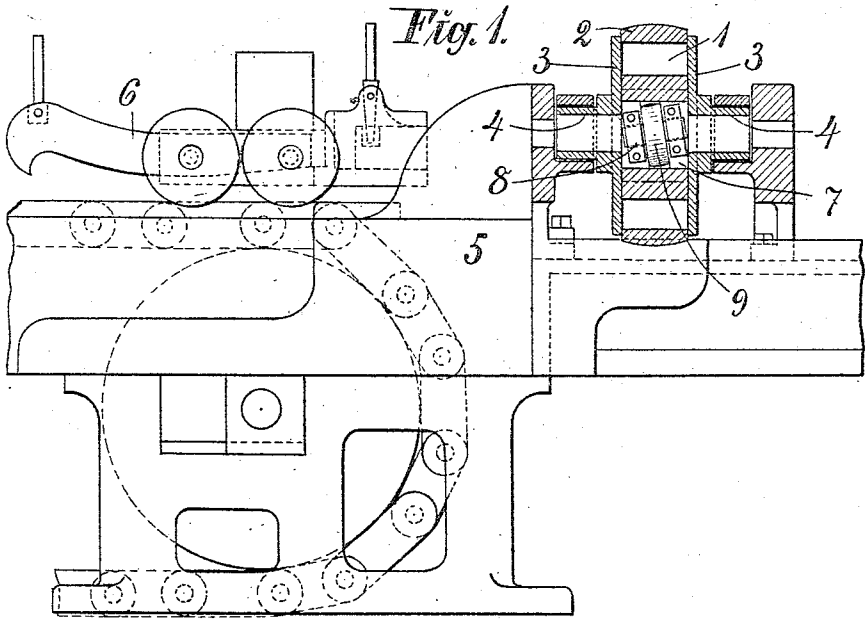

Fig. 2.

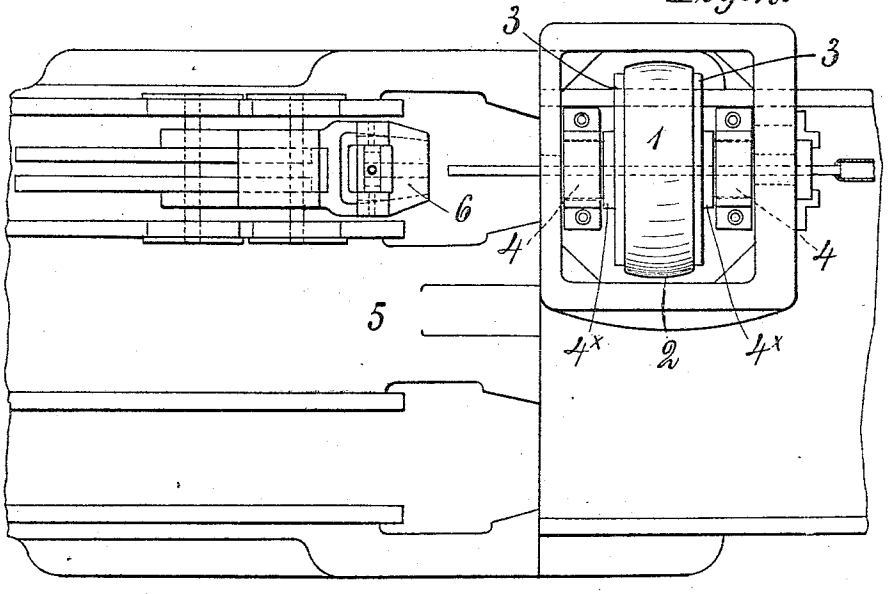

WITNESSES

Frank H. Logan

John F. Loving.

INVENTOR

KARL ROBERT WESTIN

BY Howard Denneel

ATTORNEY

K. R. WESTIN.

MEANS FOR LOOSENING THE TUBE FROM THE MANDREL IN THE MANUFACTURE OF TUBES.

APPLICATION FILED NOV. 16, 1912.

1,068,549. **Patented July 29, 1913.**

2 SHEETS—SHEET 2.

Fig. 3.

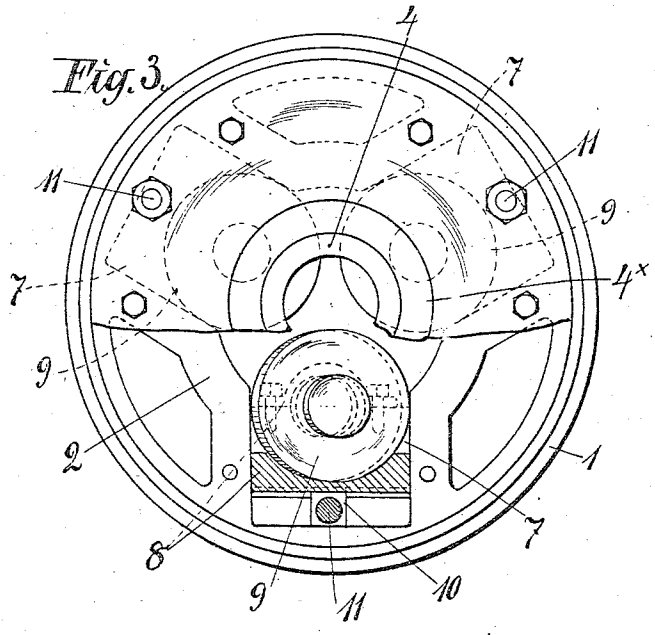

Fig. 4.

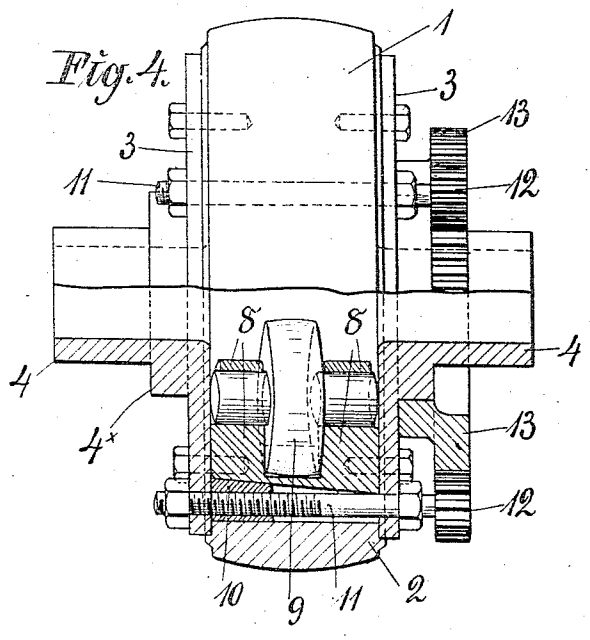

WITNESSES

Frank A. Logan

John H. Loving

INVENTOR

KARL ROBERT WESTIN

BY Howard Eldenneel

ATTORNEY

UNITED STATES PATENT OFFICE.

KARL ROBERT WESTIN, OF SANDVIKEN, SWEDEN.

MEANS FOR LOOSENING THE TUBE FROM THE MANDREL IN THE MANUFACTURE OF TUBES.

1,068,549. Specification of Letters Patent. Patented July 29, 1913.

Application filed November 16, 1912. Serial No. 731,818.

To all whom it may concern:

Be it known that I, KARL ROBERT WESTIN, a subject of the King of Sweden, and resident of Sandviken, in the Kingdom of Sweden, have invented certain new and useful Improvements in Means for Loosening the Tube from the Mandrel in the Manufacture of Tubes, of which the following is a specification, reference being had therein to the accompanying drawings.

This invention relates to a device for loosening the tube from the mandrel in the rolling or drawing of tubes, in which device are used rollers, in a rotating disk, casing or the like and journaled in an oblique direction relative to the longitudinal axis of the tube. This device, in combination with the mandrel, rolls the tube crosswise, thus enlarging the tube. The oblique position of the rollers relative to the tube causes the rollers to have a tendency to move along spiral lines around the tube, so that they do not counteract the motion of the tube in its longitudinal direction, even though there is often a stress, in axial direction, between the rollers and the rotating casing.

The object of this invention is to so arrange the said parts, that the effect of the said stress as an obstacle to the operation of the device, that is, to its rotation, is reduced to a minimum, the rollers at the same time being easily accessible for adjusting the pressure effected by the same. This object is gained by having the rollers journaled not directly in the rotary disk or casing but in special adjustable bearings provided in the same, and by having the hollow trunnions of the disk or casing not wider than is necessary for the passage of the tube, and by having annular shoulders or bearing surfaces, on the said trunnions, which will sustain the axial pressure. Owing to this arrangement the device will run easily and the rollers can easily be tightened, when desired, the means provided for effecting the tightening being easily accessible.

The accompanying drawings show a portion of a drawing machine, arranged in accordance with this invention.

Figure 1 is a side view and Fig. 2 is a plan view of the same. Figs. 3 and 4 show, on a larger scale, the loosening device in an end view and a side view respectively both partly in section.

The loosening device consists of the casing 1, comprising the disk 2 and the side plates 3, 3, the latter being provided with the hollow, tube-like trunnions 4, 4, by means of which the casing is journaled in the frame 5 of the machine, so the tube drawn forward by the hook 6, can pass through the trunnions.

The disk 2 has radial recesses 7, having therein suitable bearings 6, in which are journaled the rollers 9 adapted to bear against a tube passing through the device. These rollers, preferably three, are located around the tube, equidistant from each other. For tightening the rollers wedges 10 are provided on the outer side of the respective bearing 8 and slidable in the recesses 7, the wedges each consisting of a sleeve or the like in screw-threaded engagement with screws 11 or the like extending through the casing 1 longitudinally of the same, whereby the sleeves may be moved by rotating the screws or moving the same in their longitudinal direction. In order that all the rollers may be tightened uniformly and at the same time and that the tightening operation may be effected during the operation of the machine, the screws may be provided with pinions 12, engaging a common toothed wheel 13, located on one of the trunnions 4, so that by rotating said toothed wheel with relation to the casing 1, the pinions are caused to rotate. The pinions and the toothed wheel are shown in Fig. 4. The shafts of the rollers 9 have oblique positions relative to the longitudinal axis of the tube *i. e.* the said shafts are not fully parallel to the said axis, so that the direction of the rolling movement of the rollers corresponds to the spiral line described by the rollers moving around the tube. Owing to this arrangement and by imparting to the casing a suitable rotary velocity, it is possible to pass the tube between the rollers. The casing may be arranged like a pulley and be rotated by means of a belt passing around the same, or the casing may be rotated by any other suitable motion transmitting device. The annular shoulders 4*, provided near the ends of said trunnions 4, 4, or the end surfaces of the said trunnions bear themselves against corresponding surfaces, provided on the bearings of the casing or any other suitable stationary part, so that the casing is sustained axially, near its center line. The described loosening device is located between the draw

plate or jaws and the mechanism which draw the tube and the mandrel simultaneously through the device. By the action of the rollers the tube is enlarged and loosened from the mandrel. The described device may be used, also in the manufacture of tubes by the aid of a mandrel not only in the manner described above, but also in any other suitable manner.

Having now described my invention, what I claim as new and desire to secure by Letters Patent is:

1. In a machine for operating upon tubes manufactured by the aid of a mandrel, the combination of a rotary disk having a central opening and radial recesses having closed outer ends; bearing blocks radially slidable in said recesses and each having an inclined outer face; rollers journaled in said blocks having their axes oblique to the axis of the disk; wedges in said recesses between the closed ends and said inclined faces, and each provided with a longitudinally threaded bore; screws passing through a face of the carrier into said bores; pinions on the ends of the screws; and a wheel having teeth engaging all of the pinions.

2. In a machine for operating upon tubes manufactured by the aid of a mandrel, the combination of a rotary disk having radial recesses having closed outer ends; blocks in said recesses and having inclined outer end faces; rollers mounted on said blocks; wedges between said outer ends and said faces; and means for simultaneously positively moving said wedges.

3. In a device for operating upon tubes manufactured by the aid of a mandrel, the combination of a rotary carrier having an axial passage provided in the same for the passage of the tube and mandrel; rollers located in the said carrier, which during the rotary motion of the carrier are forced against the tube to enlarge the same; bearings for the said rollers; wedges supporting the said bearings; screws for the tightening of the said wedges; pinions provided on the screws for rotating the same; and a toothed driving wheel common to the said pinions for tightening all the rollers against the tubes simultaneously.

4. In a machine for operating upon tubes manufactured by the aid of a mandrel, the combination of a disk having an open central part and radial recesses communicating therewith; side plates secured on opposite faces of said disk and having oppositely disposed alined trunnions each having an annular shoulder forming a reduced end; fixed alined bearing supports receiving said ends and engaging against said shoulders respectively; bearing blocks radially slidable in said recesses and each having alined bearings at its inner part and an inclined outer face, the axis of the alined bearings of each block being oblique to the axis of the trunnions; rollers journaled in the bearings of each block; wedges in the radial recesses between said inclined outer face and the end face of the recesses and each provided with a longitudinal threaded bore; screws passing through the side plates and engaging in said bores; pinions on the outer ends of the screws; and a toothed wheel rotatable on one of said trunnions and engaging said pinions.

In witness whereof, I have hereunto signed my name in the presence of two subscribing witnesses.

KARL ROBERT WESTIN.

Witnesses:
AXEL EHRNER,
GERTL. PRICE.