Oct. 11, 1932. L. D. PEIK 1,882,442

TUMBLING MILL

Filed Aug. 8, 1928 4 Sheets-Sheet 1

FIG.1.

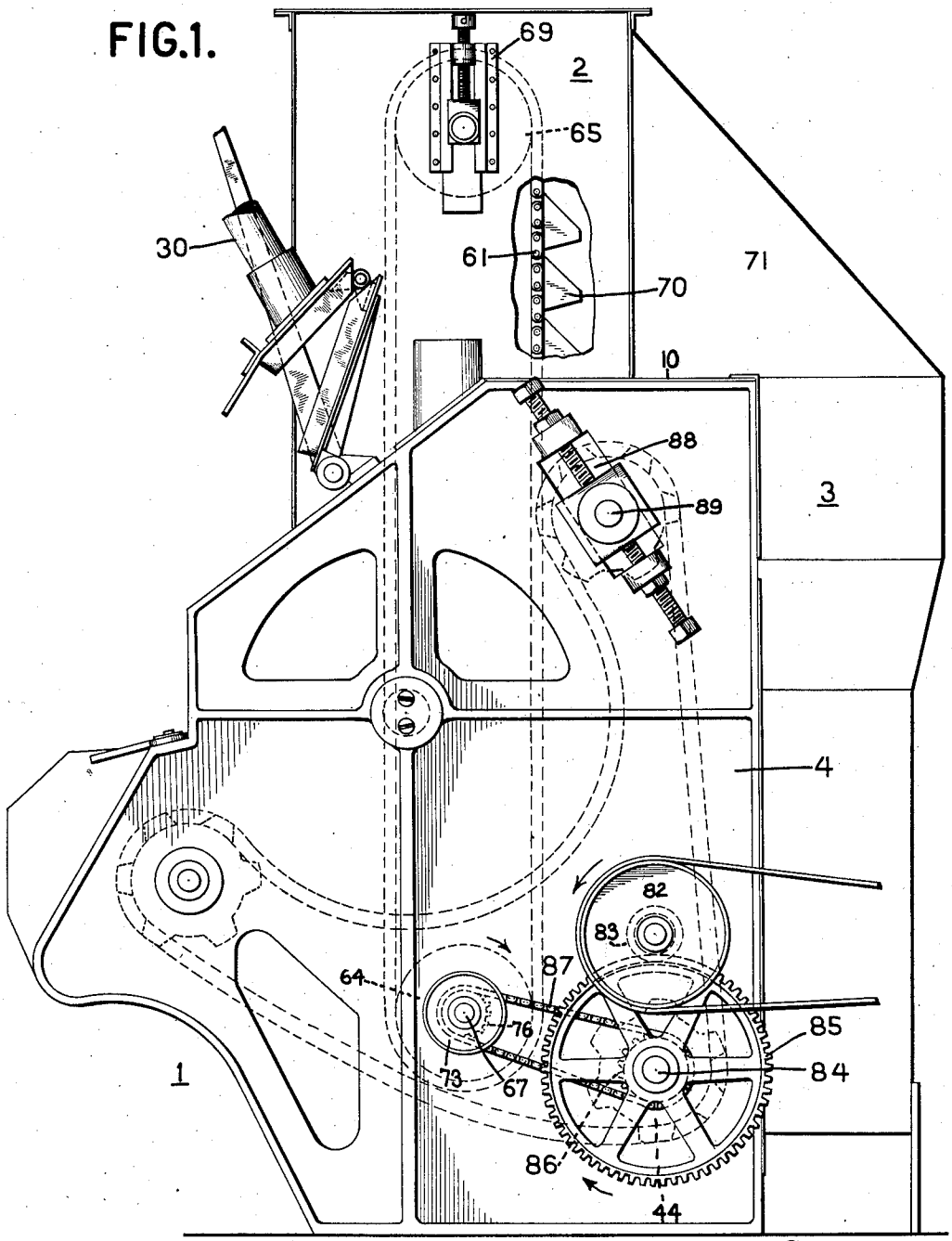

Inventor
LOUIS D. PEIK
By his Attorney Albert M. Austin

Oct. 11, 1932. L. D. PEIK 1,882,442

TUMBLING MILL

Filed Aug. 8, 1928 4 Sheets-Sheet 2

FIG.4.

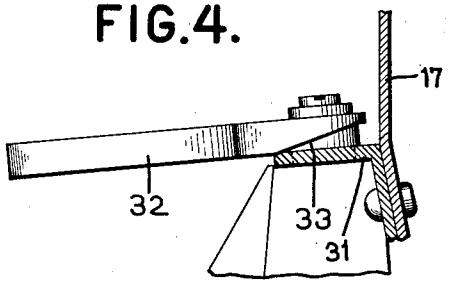

FIG.2.

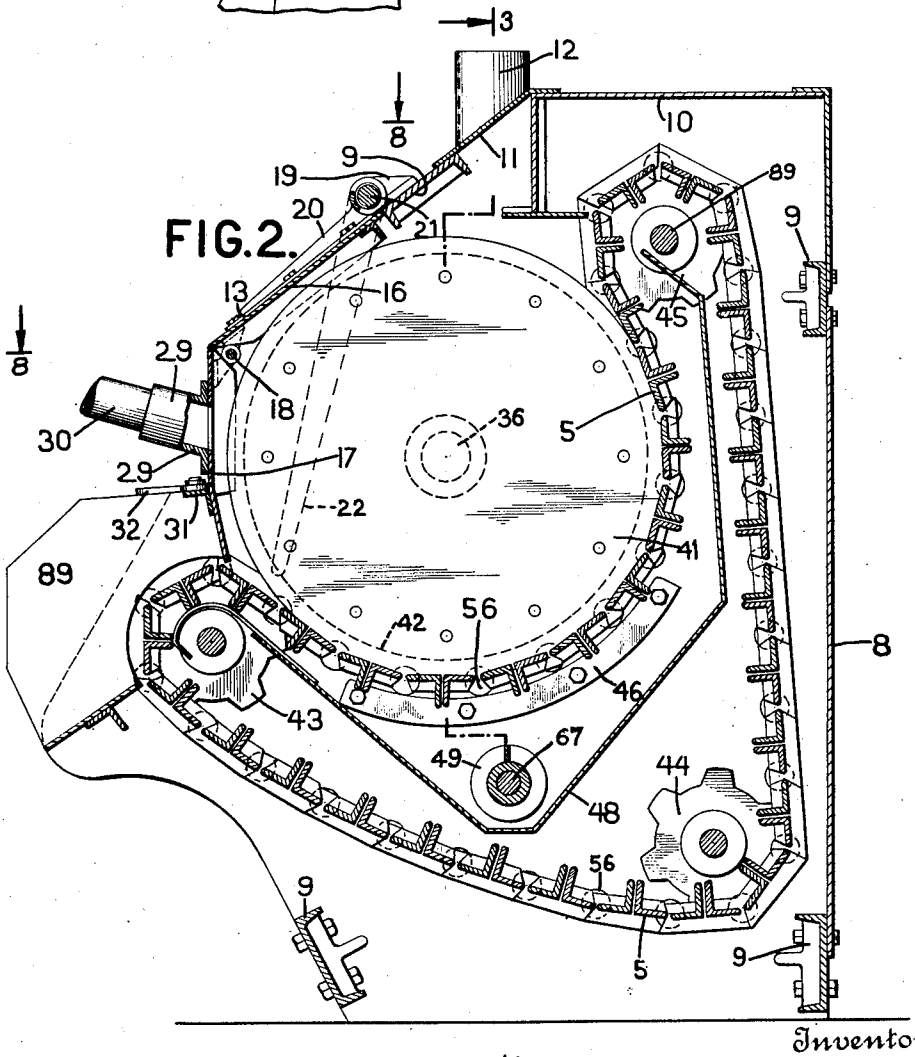

Inventor
LOUIS D. PEIK

By his Attorney Albert M. Austin

Oct. 11, 1932. L. D. PEIK 1,882,442

TUMBLING MILL

Filed Aug. 8, 1928 4 Sheets-Sheet 3

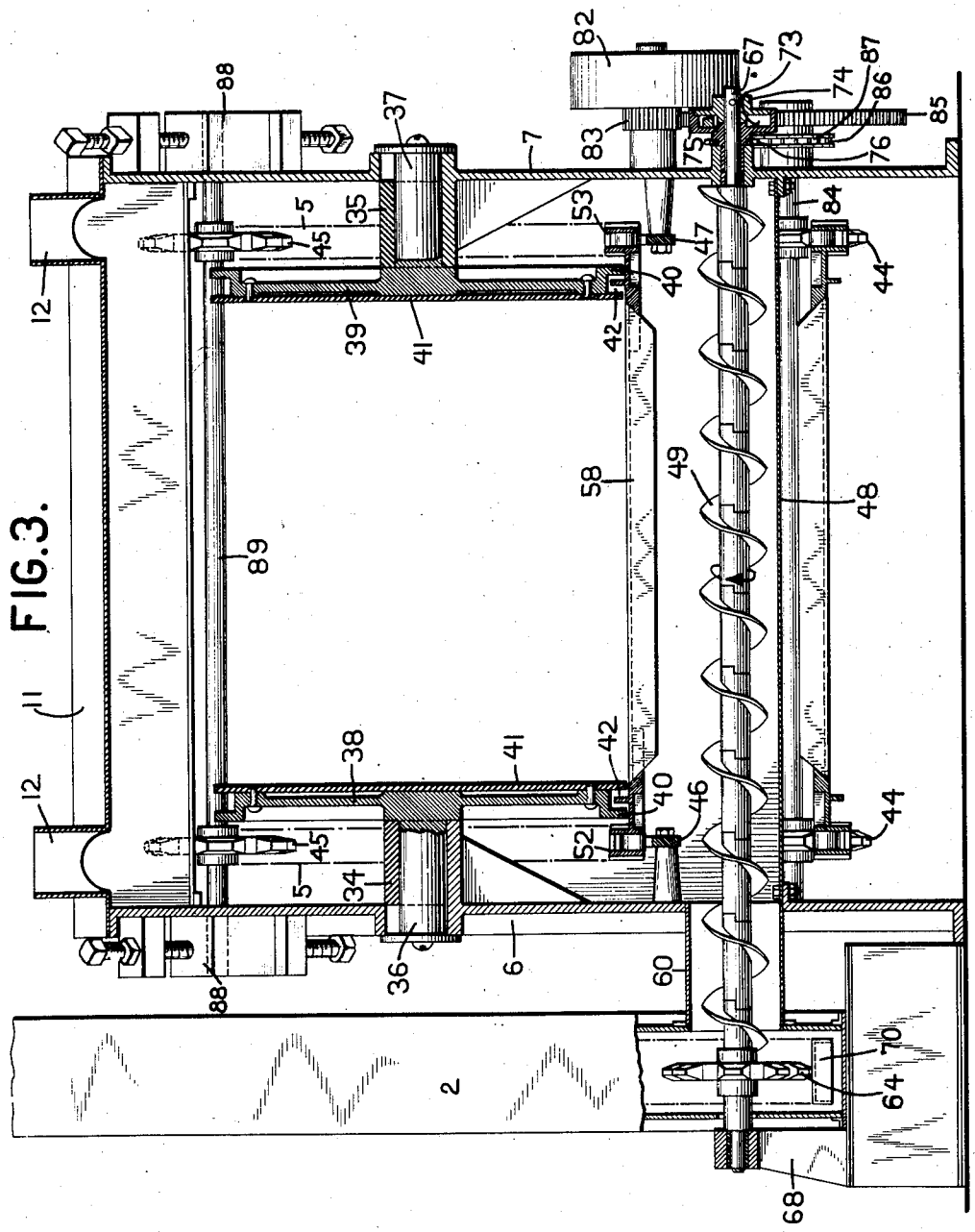

FIG.3.

Inventor
LOUIS D. PEIK
By his Attorney Albert M. Austin

Oct. 11, 1932. L. D. PEIK 1,882,442

TUMBLING MILL

Filed Aug. 8, 1928 4 Sheets-Sheet 4

FIG.5.

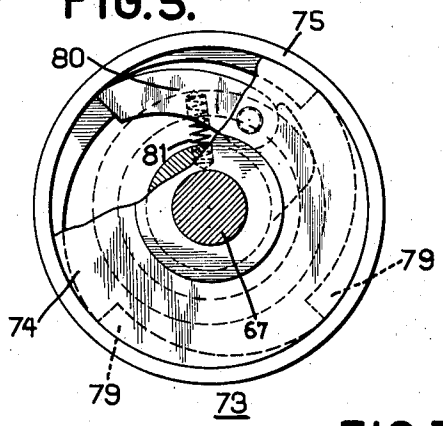

FIG.6.

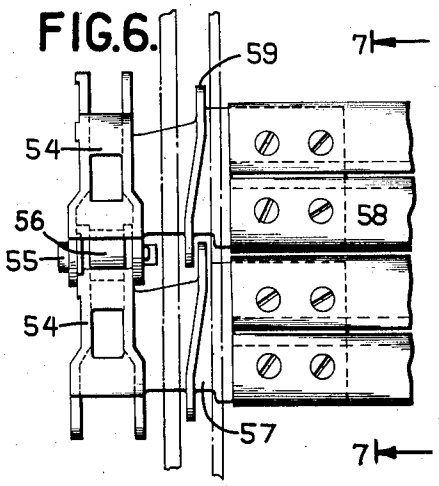

FIG.7.

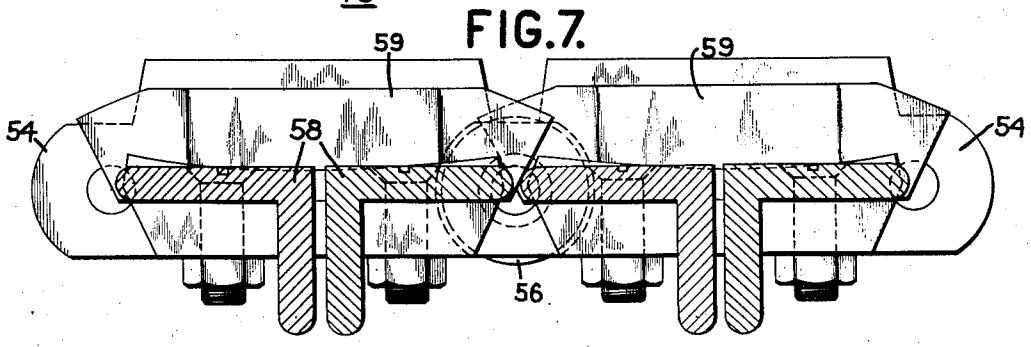

FIG.8.

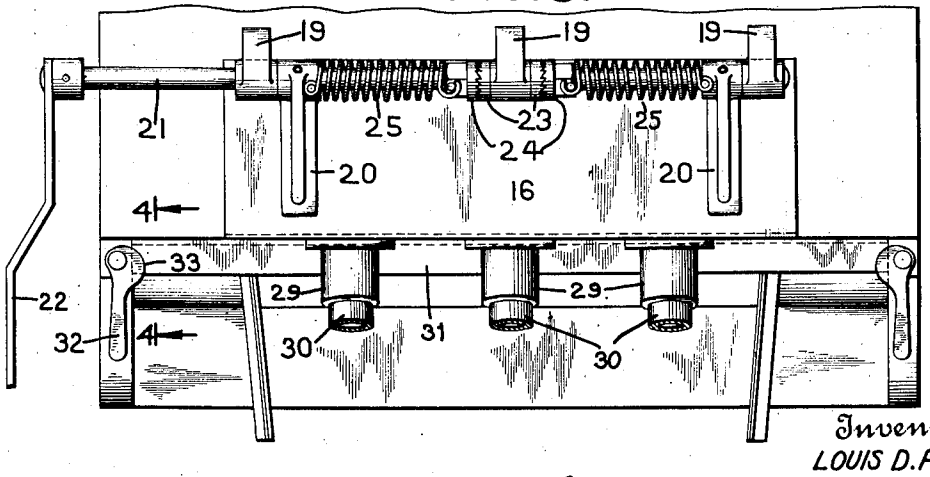

Inventor
LOUIS D. PEIK

By his Attorney Albert M. Austin

Patented Oct. 11, 1932 1,882,442

UNITED STATES PATENT OFFICE

LOUIS D. PEIK, OF MISHAWAKA, INDIANA, ASSIGNOR TO THE AMERICAN FOUNDRY EQUIPMENT COMPANY, OF NEW YORK, N. Y., A CORPORATION OF DELAWARE

TUMBLING MILL

Application filed August 8, 1928. Serial No. 298,194.

The invention relates in general to abrading apparatus, and more particularly to a tumbling mill for smoothing rough castings and the like.

In apparatus of this type it is desirable that the articles treated be tumbled so that all sides thereof are exposed to the action of a swift current of air carrying an abrasive issuing from discharge nozzles, and that simple provision be made for charging the apparatus with the articles to be treated and also for discharging same. Furthermore, it is desirable that the spent abrasive be collected and sent back to the discharge nozzles to be used over again, the abrasive thereby travelling a continuous closed circuit. According to the invention the above desirable features are obtained and also others which will appear as the description proceeds.

The apparatus in the form illustrated comprises essentially a barrel having a stationary segment and a movable segment. Discharge nozzles are provided to discharge abrasive on the articles which are being tumbled by the movable segment, and a catch trough is provided for catching the abrasive after it acts upon the articles thus treated. A worm conveyor is provided in the bottom of the catch trough, which carries the abrasive to an elevator. This abrasive is elevated to an abrasive tank where the abrasive is again picked up by air and carried to the discharge nozzles. The arrangement is such that, on reversing the direction of movable segment, the articles are automatically discharged from the apparatus through the charge opening. Suitable devices are provided so that reversal of the movable segment will not also reverse the worm conveyor and elevator.

The invention also consists in certain new and original features of construction and combinations of parts hereinafter set forth and claimed.

Although the novel features which are believed to be characteristic of this invention will be particularly pointed out in the claims appended hereto, the invention itself, as to its objects and advantages, the mode of its operation and the manner of its organization may be better understood by referring to the following description taken in connection with the accompanying drawings forming a part thereof, in which

Fig. 1 is a side elevation of the apparatus;

Fig. 2 is a longitudinal central section;

Fig. 3 is a section taken on the line 3—3 of Fig. 2;

Fig. 4 is a detail of the clamping lever for clamping down the cover;

Fig. 5 is a detail illustrating the one way clutch;

Fig. 6 is a detail illustrating the construction of the movable conveyor used for the movable segment;

Fig. 7 is a section on the line 7—7 of Fig. 6; and

Fig. 8 is a view taken on the line 8—8 of Fig. 2 illustrating the construction of the door.

In the following description and in the claims parts will be identified by specific names for convenience, but they are intended to be as generic in their application to similar parts as the art will permit.

Like reference characters denote like parts in the several figures of the drawings.

In the drawings accompanying and forming part of this specification, a practical commercial embodiment of the invention is shown, but as such illustration is primarily for purposes of disclosure, it will be understood that the structure may be modified in various respects without departure from the broad spirit and scope of the invention as hereinafter defined and claimed.

Referring now to the drawings, the apparatus includes essentially the tumbling barrel 1, elevator 2, and sand blast tank 3. The barrel 1 is made up of a stationary casing 4 enclosing the movable segment 5. This casing 4 is made up of a pair of end walls 6 and 7 to which the several side wall plates 8 are secured. The end walls 6 and 7 are preferably casting, suitably ribbed for strength and having suitable attaching brackets and flanges cast integral therewith to which a plurality of transverse channels 9 are provided connecting the end walls 6 and 7. The several wall plates 8 are secured to the end walls 6 and 7 and to these channels 9. These plate

members include an upper sheet 10 in the form of an angle having a depending wall and an exhaust sheet 11 having a plurality of exhaust pipes 12 connected thereto.

Closing part of the back of the casing 4 is a composite door 13 made up of an upper section 16 and a lower section 17 hinged thereto by hinge members 18. The upper section 16 is hinged to the channel iron 9 by a spring hinge. Secured to the channel iron 9 are three lugs 19 while secured to the upper door section 16 are two lugs 20. Threading all of these lugs is a shaft 21, to the outer end of which an operating handle 22 is pinned. This shaft passes freely through the lugs 19 but is pinned to the lugs 20 on the door. Secured to the central lug 19 is a pair of toothed members 23 cooperating with tooth members 24 rotatably mounted on the shaft 21 and having wrench engaging surfaces. Two coil springs 25 connect the lugs 20 and the toothed members 24 as illustrated. It will be seen that by proper rotation of the toothed members 24 the tension of the springs 25 may be built up to counteract the weight of the door so it may be easily opened and closed.

The lower section 17 of the door supports a plurality of nozzle holding bases 29 to which are connected flexible hoses 30 communicating with the tank of compressed air and abrasive 3. The lower part of the lower section 17 is bent slightly and supports an angle iron 31. Pivoted to the stationary part of the casing wall at each end of the angle iron is a lever 32 having a cam surface 33 for engaging the top of the angle iron 31 to clamp the door securely in closed position, this construction being illustrated in detail in Fig. 4.

The casing ends 6 and 7 are provided with hollow bosses 34 and 35 in which fit projecting posts 36 and 37 secured to circular barrel heads 38 and 39. Each barrel head has an annular offset flange 40 on its periphery and each head has a liner plate 41 secured thereto, the liner plate with the offset flange forming a circular groove 42 for a purpose hereinafter described.

Cooperating with the casing 4 and with the barrel heads 38 and 39 and forming the movable segment is an endless belt 5 suitably supported upon three pairs of sprockets 43, 44 and 45, these sprockets being supported on suitable shafts two sprockets on each shaft. Secured to the frame ends 6 and 7, one on each side, are track members 46 and 47 for supporting the endless chain at a point where the articles to be treated exert their weight. Disposed between the upper and lower plys of the chain is an abrasive pan 48, this pan extending from a point near the sprockets 43 all the way up to the upper sprockets 45 and having its bottom in the shape of a transverse trough. Disposed in this trough is a worm conveyor 49 suitably driven by a sprocket outside the casing.

The movable segment or belt conveyor 5 is made up of chains 52, 53, one on each side running on the sprockets 43, 44, 45 on its particular side, these chains having links 54 (Fig. 6) of more or less conventional form connected by the usual pins 55 having rollers 56 thereon. Secured to the links 54 are projecting offset portions 57 having seats for transverse angle irons 58. These links are also provided with upstanding flanges 59 of peculiar offset shape to interfit with the flanges of adjoining links, these flanges projecting into the annular groove 42 on the barrel heads, as illustrated in Fig. 3. These angle irons or aprons 58 extend from one chain the length of the barrel to the other chain and support the articles which are being treated. These angles or aprons 58 are spaced apart as shown, so that after the sand has been spent on the articles, the sand falls through into the abrasive pan 48. It will be noted that the chains 52, 53 are outside of the blasting chamber and are therefore protected from the direct force of the blasting while only exposed to the blasting are the angle irons 58 and the liners 41 on the barrel heads, all of which may be replaced when worn. The chain rollers 56 ride on tracks 46, 47 thereby insuring sufficient strength to support the weight of the articles being treated, which may be considerable.

The worm conveyor 49 extends through a short conduit 60 into the bottom of the elevator 2. The elevator is made up of an upstanding casing having a traveling chain 61 therein supported on a lower sprocket 64 and an upper sprocket 65. The lower sprocket 64 is mounted upon the worm shaft 67 which is suitably journalled in a support 68. The upper sprocket 65 is mounted upon a shaft which is adjustable by means of adjustable devices 69 for adjusting the tension of the chain 61. The chain carries a plurality of scoops or buckets 70 which scoop the abrasive carried from the abrasive pan 48 into the bottom of the elevator and carry it to the upper part of the elevator where it is dumped into an incline 71 connecting with the abrasive tank 3. It will be understood that the abrasive in the abrasive tank is picked up by the air blast by suitable means (not shown) and carried through the flexible hoses 30 to suitable nozzles (not shown) disposed in the nozzle holders 29.

Mounted upon the worm shaft 67 is a one way clutch 73 made up of a plate member 74 rigidly secured to the shaft 67 and a recessed member 75 rigidly secured to a driving sprocket 76 all loosely mounted on the shaft. The recessed member 75 (Fig. 5) is provided with a plurality of ratchet teeth 79 while the plate member 74 is provided with a pawl 80 pivoted thereto between which and the hub of the plate member a coil spring 81 is positioned to continually urge the pawl against

the teeth 79 of the recessed member 75. By this one way clutch 73 the drive sprocket 76 can only drive the worm conveyor 49 and elevator belt 61 in one direction.

Driving the entire apparatus is a belt pulley 82 suitably journalled in the casing end on a suitable shaft also supporting a pinion 83. The shaft 84 for the lower sprockets 44 which is the drive shaft for the movable segment 5 has mounted thereon a spur gear 85 which is driven by the pinion 83. Also mounted on this shaft is a sprocket 86 on which is mounted a sprocket chain 87 driving the sprocket 76 and one way clutch 73.

The casing ends 6 and 7 are provided with devices 88 for supporting the upper shaft 89 carrying sprockets 45 for properly tensioning this belt conveyor.

To use the apparatus, the door 13 is opened to the position shown in Fig. 1 and the articles to be treated are placed in the part of the barrel formed by the movable segment 5. The door is then closed and clamped down by the levers 32 to the position shown in Fig. 2 and the driving motor (not shown) is started to rotate the pulley 82 in the direction shown by the arrow in Fig. 1. This causes the belt conveyor to move in a direction carrying the articles upward and it will be easily seen that, as these articles are carried upward, they will slide and tumble down continuously as the conveyor moves, exposing all sides thereof to the action of the sand blast coming from the nozzles (not shown) in the nozzle holders 29. The particles removed from the surface of the articles and the spent abrasive fall between the angle irons or aprons 58 of the conveyor into the pan 48 where the rotating worm conveyor 49 carries it to the elevator 2 whence it is elevated to the abrasive tank 3 as above explained.

After the articles have been treated sufficiently the driving mechanism is stopped, the abrasive blast is shut off and the door 13 is opened. The driving motor driving the belt and pulley 82 is reversed, this reversing the motion of the belt conveyor 5 and easily carrying the articles out of the charge opening on to the floor or receptacle waiting for them. It should be noted that the one way clutch 73 prevents this reverse movement from being communicated to the worm conveyor 49 and elevator 2. The deflector plates 89 one on each side of the opening serve to guide the articles as they are discharged from the opening.

Thus a tumbling mill has been provided which is simple and efficient in operation, rugged in construction and which occupies comparatively small space. The events occur in a closed cycle so that the sand or other abrasive is used over and over again. Furthermore, the provision of reversing the movable segment permits a most easy discharge of the articles after they have been treated and only one door is necessary for charging and discharging the apparatus. The particular construction and arrangement of the door makes it most easy to operate. Furthermore, the one way clutch insures that no reverse movement can be given the worm conveyor or the elevator to bring back the abrasive which has once been carried to these elements.

While certain novel features of the invention have been shown and described and are pointed out in the annexed claims, it will be understood that various omissions, substitutions and changes in the several steps of the process and in its operation may be made by those skilled in the art without departing from the spirit of the invention.

What is claimed is:

1. A tumbling machine comprising a stationary casing having a stationary charge opening, barrel heads secured in said casing, an endless conveyor extending around said heads to form a shallow receptacle for the articles to be treated, said conveyor extending up higher on the side opposite the charge opening than at said opening, means for moving said conveyor to carry the articles up the high side to tumble them, and means for reversing the conveyor to discharge the articles over the low side out said opening, supporting wheels for supporting said endless conveyor at the high and low sides, and means for mounting said wheels in fixed positions.

2. In an abrading machine, a mill comprising a stationary portion and a complementary movable portion for tumbling articles, a receiving member for receiving abrasive after it is spent on said articles, nozzles for discharging abrasive on said articles, devices carrying said abrasive from said receiving member back to said nozzles, a one way clutch between said movable portion and said devices and means for driving said movable portion one way to tumble said articles and another way to discharge said articles, said clutch preventing return of said abrasive when said movable portion is driven to discharge said articles.

3. In an abrading machine, a tumbling mill comprising a stationary segment and an endless conveyor forming a complementary movable segment, a receiving trough under a part of said conveyor for receiving abrasive passing therethrough, a screw conveyor in said trough, an elevator for elevating material brought to one end of said trough by said screw conveyor, driving means for said endless conveyor, screw conveyor and elevator, and a one way clutch between said endless conveyor on the one hand and said screw conveyor and elevator on the other hand, so that said screw conveyor and elevator will not be reversed when said endless conveyor is reversed to discharge contents of the barrel.

4. In a tumbling mill, a stationary casing having a charge door in one side thereof, barrel heads secured to end walls of said casing, liner plates secured to said heads, an endless belt conveyor extending around said heads to form a shallow receptacle for the articles to be treated, said door being close to said receptacle, means for driving said receptacle to carry the articles away from said door to tumble them, and means for reversing said conveyor to discharge the article through said door.

5. In a tumbling mill, a stationary casing, barrel heads secured to said casing, an upper pair of sprockets outside said heads, a lower pair of sprockets also outside said heads and substantially opposite said upper pair, a third pair of sprockets spaced from said upper and lower pairs, endless chains on said sprockets, aprons extending from one chain to the other, said chains and aprons forming an endless belt conveyor having one ply extending from said lower pair around said heads to said upper pair to form a shallow receptacle for the articles to be treated, the other ply of said conveyor extending around said third pair of sprockets, and means for driving said conveyor, and means for rotatably mounting said sprockets in fixed positions.

6. In a tumbling mill, a stationary casing having a door in one side thereof, barrel heads secured to end walls of said casing, an upper pair of sprockets outside said heads, a lower pair of sprockets also outside said heads and substantially opposite said upper pair, a pair of drive sprockets under said upper pair, endless chains on said sprockets, rollers on said chains, aprons extending from one chain to the other, said chains and aprons forming an endless belt conveyor having its upper ply extending from said lower pair around said heads to said upper pair to form a shallow receptacle for the articles to be treated, the lower ply of said conveyor extending around said drive sprockets, a trough shaped abrasive pan between said plys to collect abrasive passing between said aprons, tracks on said casing on which said rollers ride at said receptacle, a worm conveyor in said trough for carrying abrasive to one end of said casing, and nozzle holders on said casing, and means for rotatably mounting said sprockets in fixed positions.

7. In a tumbling mill, a casing having a door in one side thereof, barrel heads secured to end walls of said casing, liner plates secured to said heads and forming with said heads annular channels, an upper pair of sprockets outside said heads, a lower pair of sprockets also outside said heads and substantially opposite said upper pair, a pair of drive sprockets under said upper pair, endless chains on said sprockets, the links of said chains having offset seats and overlapping raised flanges fitting in said channels, rollers on said chains, aprons secured to said seats, said chains and aprons forming an endless belt conveyor having its upper ply extending from said lower pair around said heads to said upper pair to form a shallow receptacle for the articles to be treated, the lower ply of said conveyor extending around said drive sprockets, a trough shaped abrasive pan between said plys to collect abrasive passing between said aprons, tracks on said casing on which said rollers ride at said receptacle, a worm conveyor in said trough for carrying abrasive to one end of said casing, nozzle holders on said door, and vents in the top of said casing.

8. In a tumbling mill, a stationary casing having a charge opening, a fixedly positioned but movable conveyor in said casing to tumble the work, parts of said conveyor and said casing co-acting to form a tumbling compartment, said casing substantially entirely enclosing said conveyor, and means for moving said conveyor in one direction to tumble the work and in the opposite direction to discharge the work through said charge opening.

9. In a tumbling mill, a stationary casing having a charge opening, a fixedly positioned but movable conveyor in said casing to tumble the work, parts of said conveyor and said casing co-acting to form a tumbling compartment, said casing substantially entirely enclosing said conveyor, means for moving said conveyor in one direction to tumble the work and in the opposite direction to discharge the work through said charge opening, and a door closing said charge opening.

10. In a tumbling mill, a stationary casing having a charge opening, a fixedly positioned but movable conveyor in said casing to tumble the work, parts of said conveyor and said casing co-acting to form a substantially cylindrical compartment, said casing substantially entirely enclosing said conveyor, means for moving said conveyor in one direction to tumble the work and in the opposite direction to discharge the work through said charge opening, a door closing said charge opening, and holding devices for blast nozzles carried by said door.

In testimony whereof I have hereunto set my hand.

LOUIS D. PEIK.