R. H. LANE.

HEEL PROTECTOR.

APPLICATION FILED SEPT. 10, 1912.

1,068,505. Patented July 29, 1913.

Fig. I.

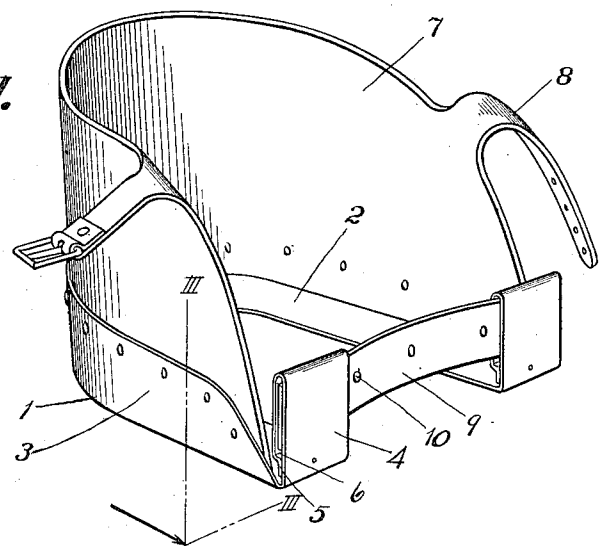

Fig. II.

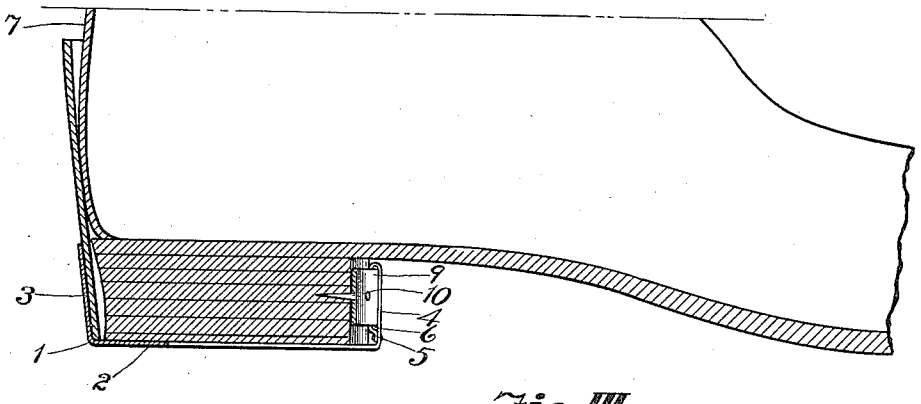

Fig. III.

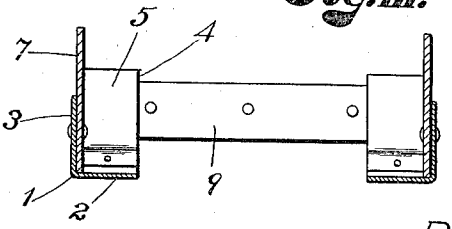

WITNESSES:

Arthur W. Capps.

Lewis L. Miller.

INVENTOR

Robert H. Lane.

BY

Arthur C. Brown.

ATTORNEY

UNITED STATES PATENT OFFICE.

ROBERT H. LANE, OF KANSAS CITY, KANSAS.

HEEL-PROTECTOR.

1,068,505. Specification of Letters Patent. Patented July 29, 1913.

Application filed September 10, 1912. Serial No. 719,519.

To all whom it may concern:

Be it known that I, ROBERT H. LANE, a citizen of the United States, residing at Kansas City, in the county of Wyandotte and State of Kansas, have invented certain new and useful Improvements in Heel-Protectors; and I do declare the following to be a full, clear, and exact description of the invention, such as will enable others skilled in the art to which it appertains to make and use the same, reference being had to the accompanying drawings, and to the letters and figures of reference marked thereon, which form a part of this specification.

My invention relates to heel protectors, and has for its principal object to provide a device of that class which may be removably applied to the heel of an ordinary shoe and worn with the shoe to protect the heel and counter when the wearer is walking over, or working, in rough ground, quarries, etc., the principal object of the present invention being to provide a simple and economical device which may be easily and quickly removed from a shoe, and which will effectually protect the heel and counter without unduly weighing the shoe.

In accomplishing this object I have provided the improved details of structure hereinafter described and illustrated in the accompanying drawings, wherein:—

Figure I is a perspective view of a heel protector constructed according to my invention. Fig. II is a longitudinal section of a shoe heel and part of the shoe to which my improved device is applied. Fig. III is a horizontal section of the protector showing the loose mounting of the anchor plate.

Referring more in detail to the parts:—1 designates the base of the protector, which preferably comprises a piece of sheet metal stamped to form a substantialy U-shaped body 2, and an upturned rim flange 3, the latter preferably rising toward the back or base of the U, and the forward ends 4 being inclined downwardly to the plane of the base 2. The ends of the base are turned upwardly and backlapped on themselves, the overlapping portions 5 being spaced from the base portions of the upturned ends and the loose ends thereof being secured to the end portions adjacent the plane of the base 2, in this way forming a slide slot 6 in each upturned end.

Fixed to the upturned rim 3 is an extension 7 which is adapted to overlie the counter of a shoe and has straps 8 which are adapted to run over a wearer's instep and buckle in order to fasten the protector to the shoe.

In order to anchor the forward ends of the protector to the face of the heel of the shoe, I provide an anchor plate 9 which is adapted to slide in the keeper slot 6 formed by the upturned ends of the base of the protector, and has backwardly directed pointed studs 10 adapted for projection into the face of the heel when the protector is placed on a shoe. The studs 10 are preferably mounted in apertures in the anchoring bar, and may be applied thereto after the bar is fitted into the keeper slots so that the bar may be placed in its mounting and the end studs applied in order that the bar may have sliding adjustment within the slots, but be prevented from longitudinal escapement by the engagement of the end studs with the inner edges of the overlapped ends.

The base of the protector and the counter member, which may be of leather, or the like, are permanently connected, and the face strip 9 is made in a separate piece and installed in the keeper slots by projecting one end of the bar through one of the slots and then moving the opposite end into its slot, after which the end studs 10 are projected through their apertures and fixed to the bar, the studs being arranged inwardly of the keeper members so that the ends of the bar may slide in the keepers without becoming displaced.

In using the device, the protector is slipped over the heel of a shoe so that the studs 10 are projected into the face of the heel and the straps 8 are buckled, or otherwise secured, over the wearer's instep.

With a protector on a shoe, a wearer may walk over stones or rough ground without marring the counter of a shoe and without wearing the heel, as the metal base receives the wear and the counter member protects the upper portion of the shoe.

Having thus described my invention, what I claim as new therein and desire to secure by Letters-Patent, is:—

1. A heel protector comprising a metal base, a counter member permanently connected with the base and having straps for connection over the instep of a shoe, and an automatically adjustable member carried

by the base and adapted for projection across the face of a heel, substantially as set forth.

2. The combination with a base member having upturned keepers at its forward end, of a bar slidably mounted in said keepers, and studs on said bar adapted for projection into the face of a heel.

3. In a heel protector, the combination with a metal base member, having an upturned rim and having its ends upturned and backlapped to form slots, of a bar slidably mounted in said slots, prongs on said bar adapted for projection into the face of a heel, and straps connected with said rim for attaching the device to a shoe.

4. A heel protector comprising a U-shaped base plate having upturned free ends provided with backlapped prongs forming keeper slots, and having an integral upturned rim, a bar slidably mounted in said keeper slots and having backwardly extending prongs, the end prongs serving to limit the sliding movement of the bar in its keepers, and means connected with the rim for attaching the device to a shoe.

In testimony whereof I affix my signature in presence of two witnesses.

ROBERT H. LANE.

Witnesses:
LEWIS L. MILLER,
LETA E. COATS.

Copies of this patent may be obtained for five cents each, by addressing the "Commissioner of Patents, Washington, D. C."