(No Model.) 2 Sheets—Sheet 1.

C. B. RICE.

OSCILLATING STEAM ENGINE.

No. 413,965. Patented Oct. 29, 1889.

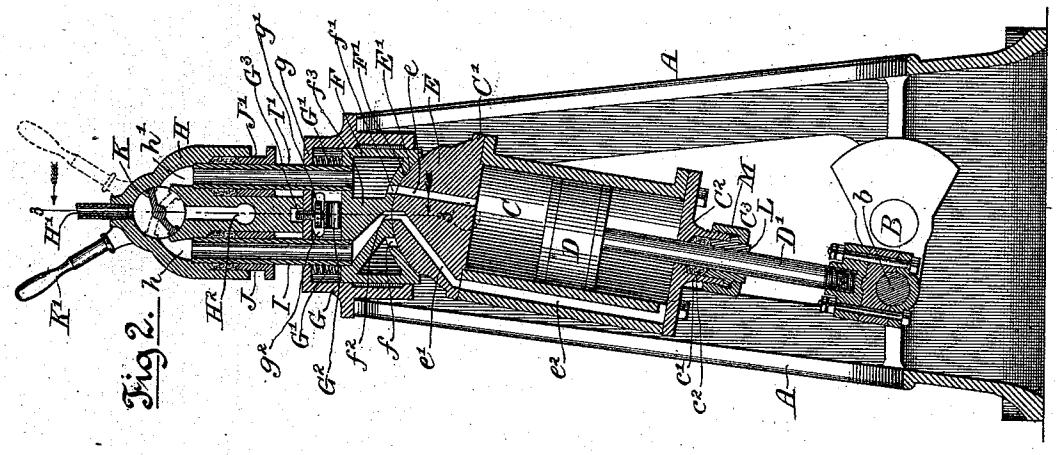

Fig 2.

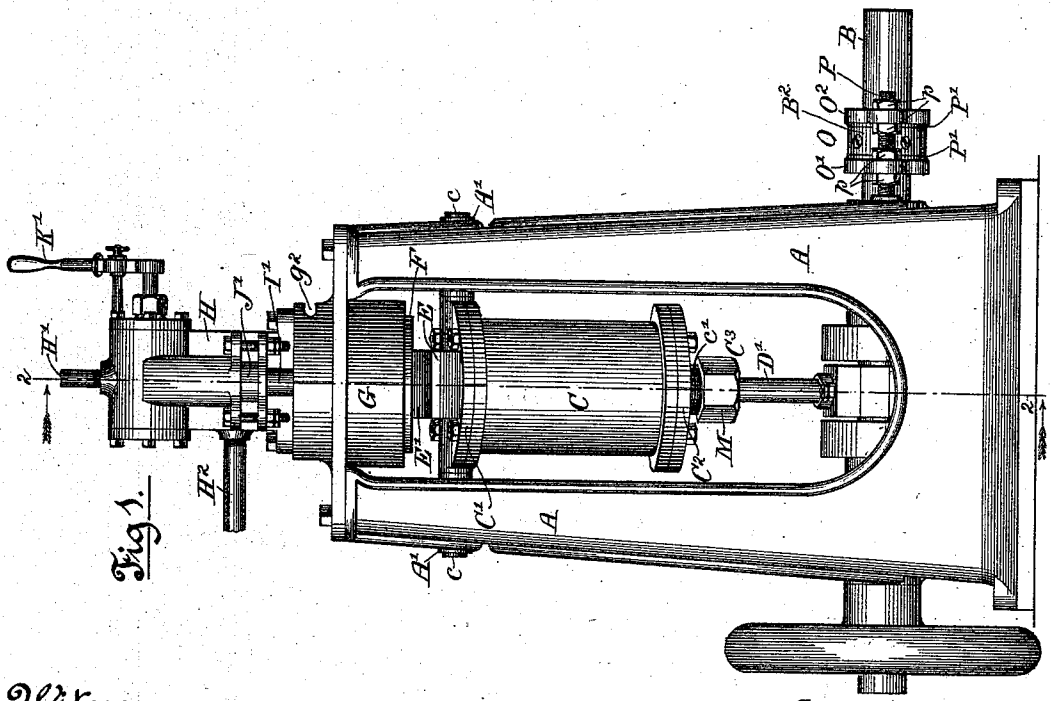

Fig 1.

Witnesses
Wm. F. Fleming.
Louis M. F. Whitehead

Inventor
Charles B. Rice
by Dayton, Poole & Brown
Attorneys

N. PETERS, Photo-Lithographer, Washington, D. C.

(No Model.) 2 Sheets—Sheet 2.

C. B. RICE.

OSCILLATING STEAM ENGINE.

No. 413,965. Patented Oct. 29, 1889.

Fig 7.

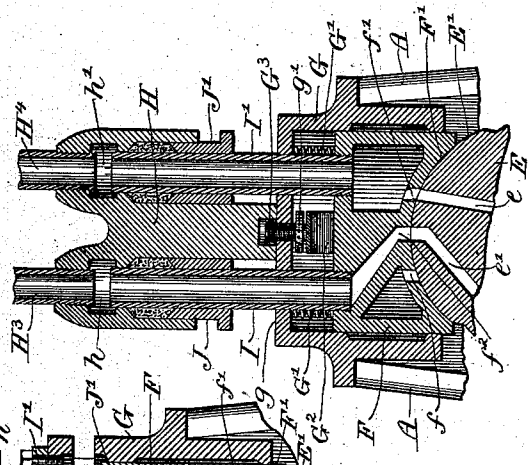

Fig 6.

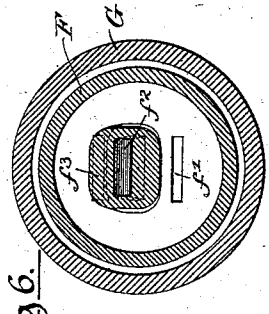

Fig 8.

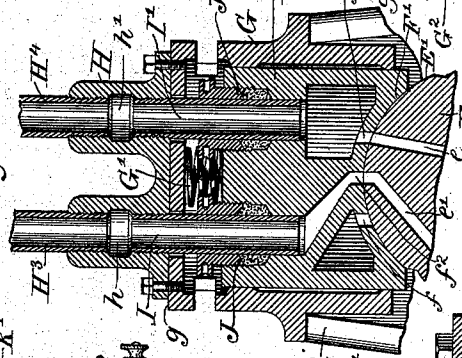

Fig 5.

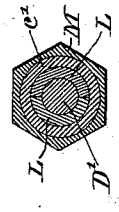

Fig 3.

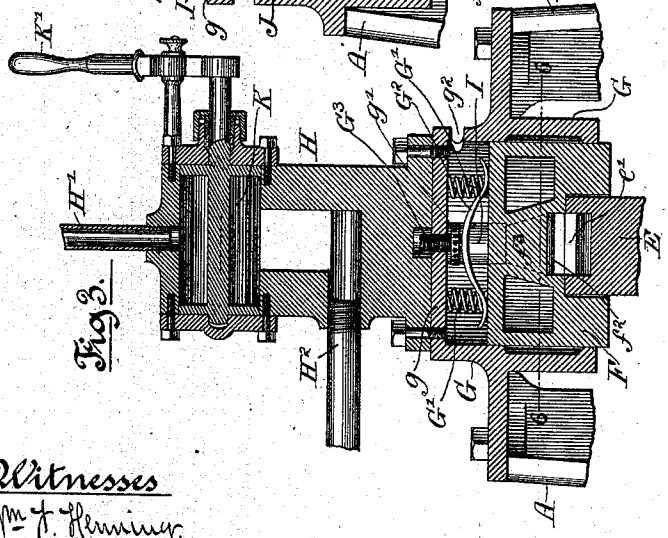

Fig 4.

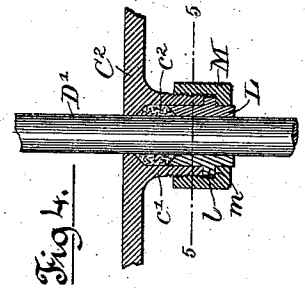

Witnesses
Wm. F. Fleming.
Louis W. Whitehead.

Inventor
Charles B. Rice

by Taylor Poole & Brown
Attorneys

N. PETERS. Photo-Lithographer, Washington, D. C.

UNITED STATES PATENT OFFICE.

CHARLES B. RICE, OF CHICAGO, ILLINOIS, ASSIGNOR TO THE RICE & WHITACRE MANUFACTURING COMPANY, OF SAME PLACE.

OSCILLATING STEAM-ENGINE.

SPECIFICATION forming part of Letters Patent No. 413,965, dated October 29, 1889.

Application filed September 11, 1888. Serial No. 285,123. (No model.)

To all whom it may concern:

Be it known that I, CHARLES B. RICE, of Chicago, in the county of Cook and State of Illinois, have invented certain new and useful Improvements in Oscillating Steam-Engines; and I do hereby declare that the following is a full, clear, and exact description thereof, reference being had to the accompanying drawings, and to the letters of reference marked thereon, which form a part of this specification.

This invention relates to improvements in steam-engines of that class known as "oscillating" engines, or engines of that kind wherein the engine-cylinder is supported upon journals or trunnions and the piston-rod is connected directly with the crank-shaft.

The invention embraces improvements in the steam-valve, piston-rod bearing, and other parts of such engines, as will hereinafter fully appear.

As far as it relates to the steam-valve of the engine the invention embraces improvements in an engine described and shown in Reissued Letters Patent No. 9,351, granted to H. K. Kriebel, August 24, 1880, wherein such valve is formed by a convex cylindric surface upon the cylinder, arranged concentric with the pivotal axis thereof, and containing ports communicating with the opposite ends of the cylinder, in connection with a sliding valve-chest containing ports which communicate with the live-steam and exhaust passages of the engine, and which is held against the said convex surface by spring-pressure.

The invention consists in the matters hereinafter described, and pointed out in the appended claims.

In the accompanying drawings, Figure 1 is a side elevation of a steam-engine embodying the same, the engine being of the kind more particularly adapted for the use as a launch or boat engine. Fig. 2 is a central vertical section of the same, taken upon line 2 2 of Fig. 1. Fig. 3 is an enlarged detail section taken upon line 3 3 of Fig. 2. Fig. 4 is an enlarged detail section of a stuffing-box for the piston-rod. Fig. 5 is a section taken upon line 5 5 of Fig. 4. Fig. 6 is a detail section taken upon line 6 6 of Fig. 3. Fig. 7 illustrates in section the parts adjacent to the valve as commonly constructed for stationary engines. Fig. 8 is a sectional view similar to Fig. 7, illustrating a modified construction in the steam-valve.

The engine herein shown is upright in form, with the cylinder arranged at the top of the frame and the crank-shaft near the bottom thereof, this form of engine being necessary for use in boats or launches, and a desirable one for small stationary engines for reasons that will hereinafter appear. The novel features of construction claimed may, however, be applied to engines of other forms—as, for instance, they may be used in horizontal engines and in cases where the cylinder and steam-valve are the lower part of the frame, as illustrated in the said Reissued Letters Patent No. 9,351, hereinbefore referred to.

As illustrated in the said drawings, A indicates as a whole the engine-frame having the general form of upright engine-frames as heretofore made, and provided at its lower end with bearings for the horizontal crank-shaft B.

C is the cylinder, which is provided at its upper end with horizontal trunnions *c c*, constructed to engage bearings A′ A′ upon the frame A, at the upper part thereof. Said trunnions *c c* are herein shown as cast integral with the upper head C′ of the cylinder; but they may be otherwise formed or constructed as may be found convenient or desirable in practice.

D is the piston, and D′ the piston-rod, which latter passes through a gland C^3 in the lower cylinder-head C^2 and engages the crank-pin *b* of the shaft B in the manner usual in oscillating engines. At the upper end of the cylinder the latter is provided with a projection E, having a cylindric surface E′ concentric with the axis of the cylinder-trunnions *c c*, and which forms the valve-seat of the steam-valve. In said valve-seat is formed a steam-port *e*, leading from the cylindric surface thereof to the adjacent end of the cylinder, and a second steam-port *e′*, leading from said cylindric surface to a longitudinal passage e^2, formed in the side wall of the cylinder and opening into the lower end thereof.

F is a sliding hollow box or valve provided

with a concave surface F′, which fits against and rests in contact with the cylindric valve-seat E′ of the cylinder. Said valve F is provided with two exhaust-ports *f f′*, leading from its concave bearing-face to its hollow interior, and with a third port f^2, which extends through a solid central part f^3 of the said valve to the upper surface thereof. The valve F is fitted to slide vertically within a cylindric casing or valve-chest G, attached to the upper end of the frame A in the manner illustrated. Said valve is arranged to fit closely within the said casing G, so that it may slide accurately in a vertical direction, but does not form a steam-tight joint therewith. The valve and valve-chest are conveniently but not necessarily cylindric in shape.

H is a hollow casting secured to the top of the casing G, or otherwise immovably supported upon or over the machine-frame, said casting being provided with two parallel steam-passages *h h′*, the lower ends of which are vertical and open through the lower surface of said casting H.

I I′ are two pipes or tubes, which are secured to the sliding valve and extend upwardly into and slide vertically within the passages *h h′*. One of said tubes I communicates with the steam-port f^2 of the valve F, while the other tube I′ communicates at its lower end with the exhaust space or opening of the valve.

J J′ are glands or stuffing-boxes, located at the lower ends of the passages *h h′* of the casting H and surrounding the tubes I I′, so as to allow vertical movement of said tubes with the valve while preventing the escape of steam between the said tubes and the casting H.

G′ G′ are springs, herein shown as made of spiral form, inserted between a horizontal top wall *g* of the casing or valve-chest G and the upper surface of the valve F. Said springs serve to hold the valve in contact with the valve-seat E′ of the cylinder, thereby maintaining a steam-tight joint between said parts as the cylinder is oscillated.

G^2 indicates an additional spring inserted between the valve and the top wall *g* of the casing to afford adjustment of the pressure of the springs. Said spring is provided with an adjustable abutment formed by a screw-shaft G^3, which is inserted in the top plate *g* and bears against the top of the spring. The spring is herein shown as made of leaf form, with its ends resting upon the top of the valve and its raised center in contact with the screw-shaft; but a spring of other form may be employed in its place with the same result. Said screw-shaft is provided with a radially-apertured collar, which may be reached by an implement through a horizontal slot g^2 in the side wall of the casing G, to enable the screw-shaft to be turned up or down and the pressure of the spring thereby varied as desired.

In Figs. 1, 2, and 3 the casing H is shown as provided at its top with a steam-inlet opening H′ and at its side with an exhaust-passage H^2. Said steam inlet and exhaust passages are adapted to be brought into communication with either of the passages *h h′* by means of a rotary valve K, actuated by a lever K′. This construction is employed in marine or boat engines to afford a convenient means of reversing the engines. For stationary engines, however, the construction shown in Fig. 7 may be employed, wherein steam and exhaust pipes H^3 and H^4 are connected with the upper end of said casting H and communicate directly with the separate passages *h h′* of said casting, within which passages the tubes I I′ slide, as above set forth.

The object of the construction described, embracing the tubes I I′, secured in the sliding valve and having sliding engagement with the casting H, is to enable the said valve-chest to be held by the backing-springs in close contact with the valve-seat of the cylinder, while at the same time maintaining a steam-tight joint in the connections between the sliding valve and the stationary inlet and exhaust pipes of the engines. It being entirely obvious that when the valve F is moved slightly in its bearing, owing to the wearing away of the surfaces in contact or from other causes, or by expansion of the tubes, the tubes I and I′ will slide or move endwise through the glands J J′, so that the valve may remain at all times in close bearing against the valve-seat. The said Reissued Letters Patent No. 9,351 contains the same feature of a sliding valve held by springs against a valve-seat upon a segmental projection of the cylinder. In the engine shown in that patent, however, steam-tight joints between the inlet and exhaust passages of the sliding valve and the stationary steam-passages leading to the same are formed by means of packing-rings extending entirely around the circumference of the valve.

It is well known that it is extremely difficult to make an effective and reliable steam-tight joint between a cylinder of large size and an exterior casing, and in engines made in the manner shown in said reissued patent the valves have been found difficult and expensive to construct and very liable to leak or otherwise get out of order. Owing to the great length of the packing-rings in contact with the sliding valve just described, furthermore, a compression of said rings sufficient to make tight joints produces considerable pressure upon the surface of the valve, thereby producing a degree of friction tending to greatly retard its movement and thus prevent the prompt and sensitive movement of the valve under the action of the backing-springs. In such prior construction, furthermore, steam escaping through the packing-rings is liable to get behind the sliding valve, thereby pressing the same against the seat with undesirable and unnecessary pressure.

In my improved construction above described I employ, in place of a plurality of

packing-rings acting upon the exterior of the valve, two small glands engaging two separate small tubes I I′, which are attached to and move with the valve. The necessary steam-tight joints may by this construction be cheaply and easily made, while at the same time interference with the free movement of the valve by an excess of frictional resistance is prevented, owing to the small size of the glands employed.

The spring G^2, provided with an adjustable abutment, affords another feature of improvement, said spring enabling the pressure of the valve-check against the cylinder C to be easily and quickly adjusted, according to the steam-pressure employed and other circumstances. It will of course be understood that an adjustment of such pressure is desirable, inasmuch as no more spring-pressure is required than is sufficient to prevent the steam-chest being forced away from the cylinder by the steam-pressure acting in a space equal to the area of the ports, and any additional spring-pressure will tend to increase the friction between the valve and its seat without producing any corresponding benefit.

The steam-valve in the engine, made as above described, is operated by the oscillatory movement of the cylinder in the manner heretofore common in oscillating steam-engines. When the cylinder is at one limit of its throw, one of the ports, as *e*, Fig. 2, will be in communication with the exhaust-passage through one of the exhaust-ports *f′* of the valve F, while the other port *e′* of the cylinder will be in communication with live-steam passage f^2, this position of the parts being illustrated in Fig. 2 of the drawings. At the opposite limit of the throw of the cylinder the port *e′* will be brought into communication with the exhaust-port *f* of the valve, while the port *e* will be in position to take live steam from the passage f^2. It will of course be understood that in reversing the engine by the use of the reversing-valve K the ports *f f′* become live-steam ports and the port f^2 the exhaust-port.

The same general results obtained by the use of the construction above described may be obtained by the construction illustrated in Fig. 8, wherein the tubes I I′ are secured to a stationary part of the casting containing the steam inlet and outlet passages and have sliding connection with the valve, the stuffing boxes or glands in this instance being formed in or upon the valve instead of upon the stationary part of the casting. As illustrated in said Fig. 8, I I′ are the said tubes, which are secured by screw-joints in the lower ends of the passages *h h′* of the casting H, which, in this instance, is located in contact with the casing G; and J J′ are glands formed in the upper parts of the valve F and surrounding the tubes, so that the latter may slide freely within the openings in the top of the valve as the latter is moved by the backing-springs.

It will be understood from the above that my invention is not limited to the particular construction illustrated in the tubes and glands surrounding the same, but the appended claims are intended to cover said parts however the latter are disposed or arranged.

In an oscillating engine the piston-rod acts with considerable lateral pressure upon the gland or bearing-aperture in the cylinder-head, owing to the fact that the cylinder is bodily moved by the action of the piston-rod alone, and it is desirable, therefore, not only that the steam-tight joint should be formed at this point, but that the joint should be capable of resisting lateral pressure and adapted to be easily replaced without disturbing the other parts of the engine. To attain these ends I provide a construction in the said bearing as follows: As more clearly shown in Figs. 4 and 5, the lower cylinder-head C^2 is provided with a tubular projection *c′*, which is recessed to receive the packing c^2 of the gland in the usual manner. L is a bushing or bearing ring made of brass, Babbitt, or other soft metal or other material used for bearings, and inserted in the outer end of the tubular projection *c′* and fitting closely against the piston-rod. Said bearing-ring is made of two or more parts or sections to enable it to be easily removed or placed in position when desired without disconnecting the piston-rod. M indicates a screw-threaded thimble, which is engaged with an interior screw-thread upon the tubular projection *c′*, and is arranged to engage the bushing L in such manner as to hold the same in place and to thrust it inwardly for the purpose of compressing the packing c^2. The bushing is desirably provided with a flange *l*, adapted to be engaged by an inwardly-extending flange *m* upon the thimble M, which flange *m* embraces the end portion of the bushing that extends outwardly beyond the thimble in the manner illustrated. This particular construction is employed in order to make the bushing as long as possible, and thereby give an extended bearing-surface in contact with the piston-rod.

The combined packing-box or gland and bearing constructed as above described has the important advantage that the bushing forming its bearing-surface may easily be renewed when too much worn for further use and a new bushing easily and quickly substituted. Another important advantage of this construction is that in the use of a bushing of soft metal or other material adapted for use in bearings any wear which takes place comes upon the bushing and not upon the piston-rod, the life of which is thus prolonged. It will of course be understood that the thimble M may be held in place by a screw-threaded connection with the part *c′*, or otherwise, as desired.

In a marine or boat engine constructed as herein described it is highly important that the crank should be held accurately in posi-

tion with relation to the cylinder, notwithstanding wear in the bearing or bearings, which resist the endwise thrust of the shaft, it being entirely obvious that in case the crank-shaft becomes shifted endwise the piston-rod will be pressed to one side of the cylinder by contact of the crank therewith and the free working of the cylinder in its trunnions thereby seriously interfered with.

The adjustable bearing O illustrated consists of two parallel bearing-rings O′ O², arranged at opposite sides of a collar B² upon the shaft B. The rings O′ O² are supported from the engine-frame by means of two or more rigid screw-threaded studs P P, attached to the frame and passing through holes in said rings O′ O², parallel with the shaft. Upon said screw-studs P P are placed nuts *p p*, arranged to bear against opposite sides of both bearing-rings, so that the latter may be adjusted toward or from each other, or both of said rings may be adjusted toward and from the engine-frame, as necessary or desirable for the purpose set forth.

P′ P′ indicate loose rings or washers placed between the collar B² and the bearing-rings, so as to provide a plurality of bearing-surfaces, either one of which washers may move in case of heating of the bearing-surfaces, as common heretofore in thrust-bearings for marine engines.

The form of engine described, wherein the cylinder and steam valve are at the top of the frame, is obviously an exceedingly convenient one, for the reason, among others, that the reversing and throttle valves are by this construction brought into a position convenient for the engineer, and this form of engine is therefore preferred for stationary as well as marine engines.

I claim as my invention—

1. The combination, with an oscillating cylinder, of a steam-valve for the same, consisting of a convex cylindric valve-seat attached to and moving with the cylinder, a movable part or sliding valve fitting against the said valve-seat and containing steam inlet and exhaust passages, a stationary part also provided with steam inlet and exhaust passages, and separate steam supply and exhaust tubes connecting said movable part or sliding valve with said stationary part, said tubes being attached to one part and sliding in the other part, said part in which the tubes slide being provided with packing rings or glands surrounding said tubes, substantially as described.

2. The combination, with an oscillating cylinder provided with a convex cylindric valve-seat, of a sliding part or valve provided with steam inlet and outlet passages and fitting against said valve-seat, an engine-frame provided with cylindric casing or valve-chest G, within which the said valve fits and slides, a spring located within said casing and pressing against the sliding valve, and an adjusting-screw engaging the wall of the casing and bearing on the spring, said screw having a nut inside the casing, and the casing being provided with a hole for the insertion of a wrench to turn the adjusting-screw, substantially as described.

In testimony that I claim the foregoing as my invention I affix my signature in presence of two witnesses.

CHARLES B. RICE.

Witnesses:
C. CLARENCE POOLE,
F. W. JENKINS.