(19) DANMARK

(10) **DK/EP 4283799 T3**

Patent- og Varemærkestyrelsen

(12) Oversættelse af europæisk patentskrift

(51) Int.Cl.: ***H 01 R 24/00 (2011.01)*** ***H 01 R 13/631 (2006.01)*** ***H 01 R 13/64 (2006.01)*** ***H 01 R 24/20 (2011.01)***

(45) Oversættelsen bekendtgjort den: **2025-04-22**

(80) Dato for Den Europæiske Patentmyndigheds bekendtgørelse om meddelelse af patentet: **2025-01-15**

(86) Europæisk ansøgning nr.: **23203076.7**

(86) Europæisk indleveringsdag: **2019-10-10**

(87) Den europæiske ansøgnings publiceringsdag: **2023-11-29**

(30) Prioritet: **2018-10-11 US 201862744513 P** **2019-02-11 US 201962804095 P**

(62) Stamansøgningsnr: **19871332.3**

(84) Designerede stater: **AL AT BE BG CH CY CZ DE DK EE ES FI FR GB GR HR HU IE IS IT LI LT LU LV MC MK MT NL NO PL PT RO RS SE SI SK SM TR**

(73) Patenthaver: **Bruin Biometrics, LLC, 1801 Century Park East, Suite 460 Los Angeles, California 90067, USA**

(72) Opfinder: **Burns, Martin F., , Los Angeles, 90024, USA**
Campbell, Bill, , Los Angeles, 90024, USA
Giuntoli, David M., , Los Angeles, 90024, USA
Raptis, Mark, , Los Angeles, 90024, USA
Ross, Graham O., , Los Angeles, 90024, USA

(74) Fuldmægtig i Danmark: **Zacco Denmark A/S, Arne Jacobsens Allé 15, 2300 København S, Danmark**

(54) Benævnelse: **INDRETNING MED ENGANGSELEMENT**

(56) Fremdragne publikationer:
WO-A1-2018/144941
WO-A2-2017/218818
US-A1- 2015 343 173

DESCRIPTION

Description

FIELD

[0001] The present disclosure provides apparatus for a device for detecting tissue damage through measurement of Sub-Epidermal Moisture (SEM). The present disclosure further provides apparatus for a device for detecting tissue damage through measurement of SEM, where the device includes a printed circuit board (PCB) assembled into a molded frame.

BACKGROUND

[0002] A printed circuit board (PCB) is employed in medical devices as a flat base that physically supports and electronically connects electronic components and conductors. PCBs may be single-sided, double-sided, and multilayered. PCBs are currently retained in device frames by either adhesive or provision of a lip in the frame that captures the edge of the PCB.

SUMMARY

[0003] In an aspect, the present disclosure provides for, and includes, a detachable element configured for attachment to a device for measuring tissue damage through measurement of sub-epidermal moisture as specified in claim 1. The detachable element comprises: a body comprising a retention feature configured to engage a retention groove, the body comprising a sensor comprising two electrodes, wherein the sensor is in electrical connection with the electrical contactor, an electrical contactor coupled to the body, where the contactor comprises a cantilever element that is configured to touch the planar contact surface when the retention feature is engaged with the retention groove, where the cantilever element is configured to slide along the contact surface as the detachable element is brought together with the reusable component, and a printed circuit board assembly (PCBA) comprising a printed circuit board (PCB) having an outer edge, wherein the PCB is coupled to the contactor and to the body, wherein a portion of the contactor extends beyond the outer edge of the PCB, and wherein the portion of the contactor that extends beyond the outer edge of the PCB is coupled to the body.

[0004] In an aspect, the present disclosure provides for, and includes, a connector comprising: a reusable component comprising a retention groove and an electrical contact surface that is parallel to the retention groove; and a detachable element comprising a body with a retention

feature configured to engage the retention groove and an electrical contactor coupled to the body, where the contactor comprises a compliant element that is configured to touch the contact surface of the reusable element when the retention feature of the detachable element is engaged with the retention groove of the reusable component and to slide along the contact surface as the detachable element is brought together with the reusable component.

[0005] In an aspect, the present disclosure provides for, and includes, a detachable element comprising: a body comprising a hole and a retention pocket, where the retention pocket comprises a reference surface; and a printed circuit board assembly (PCBA) comprising a printed circuit board (PCB) having an outer edge and a contactor coupled to the PCB, where a portion of the contactor extends beyond the outer edge of the PCB, where the portion of the contactor that extends beyond the outer edge of the PCB is in contact with the reference surface. In an aspect, an external surface of a PCB is flush with a surface of a frame without a protruding lip or the use of adhesive.

[0006] In an aspect, the present disclosure provides for, and includes, a detachable element comprising: a body comprising upper and lower sections joined by a flexible arm, where the upper section comprises an opening and the lower section is attached on its underside to a compressible spring; and a printed film having tabbed and non-tabbed areas, where the tabbed area comprises a sensor comprising two electrodes on one first face, and where the tabbed area is inserted between the upper and lower sections so that the sensor is aligned with the opening.

BRIEF DESCRIPTION OF THE DRAWINGS

[0007] Aspects of the disclosure are herein described, by way of example only, with reference to the accompanying drawings. With specific reference now to the drawings in detail, it is stressed that the particulars shown are by way of example and are for purposes of illustrative discussion of aspects of the disclosure. In this regard, the description and the drawings, considered alone and together, make apparent to those skilled in the art how aspects of the disclosure may be practiced.

Fig. 1A depicts a medical scanner, in accordance with the present disclosure.

Fig. 1B depicts a connector comprising a reusable component, which is part of the medical scanner of Fig. 1A in the region "A," and a detachable element, in accordance with the present disclosure.

Fig. 2 is a perspective view of the underside of the detachable element of Fig. 1B, in accordance with the present disclosure.

Fig. 3 is a perspective view of the top surface of the reusable component, in accordance with the present disclosure.

Fig. 4 is a side view of the reusable component, in accordance with the present disclosure.

Fig. 5 is a side view of the detachable element mated with the reusable component, in accordance with the present disclosure.

Fig. 6 is a cross-section of the side view of Fig. 5, in accordance with the present disclosure.

Fig. 7A is another perspective view of the underside of the detachable element of Fig. 1B, in accordance with the present disclosure.

Fig. 7B is a partially exploded view of the detachable element of Fig. 7A, in accordance with the present disclosure.

Fig. 8 is an enlarged cross-section of the region marked "B" in Fig. 7A, in accordance with the present disclosure.

Fig. 9 is a second cross-section showing the configuration of the region "B" after a heat staking operation has been completed, in accordance with the present disclosure.

Fig. 10 is an exploded view of an assembly comprising a frame, a PCB, and a retainer.

Fig. 11A is a cross-section of a body, a PCB, and a retainer.

Fig. 11B depicts the items of Fig. 11A after assembly.

Fig. 12 depicts dimensions of an example sensor in accordance with the present disclosure.

Fig. 13A depicts an exploded view of an assembly comprising a flexible frame with one end of a printed film inserted between upper and lower sections of the frame and the other end of the printed film wrapped around the underside of a compressible spring attached to the bottom of the frame, in accordance with the present disclosure.

Fig. 13B depicts a top view of one face of an unfolded, printed film, in accordance with the present disclosure.

DETAILED DESCRIPTION

[0008] This description is not intended to be a detailed catalog of all the different ways in which the disclosure may be implemented, or all the features that may be added to the instant disclosure. For example, features illustrated with respect to one embodiment may be incorporated into other embodiments, and features illustrated with respect to a particular embodiment may be deleted from that embodiment. Thus, the disclosure contemplates that, in some embodiments of the disclosure, any feature or combination of features set forth herein can be excluded or omitted. In addition, numerous variations and additions to the various embodiments suggested herein will be apparent to those skilled in the art in light of the instant

disclosure, which do not depart from the instant disclosure. In other instances, well-known structures, interfaces, and processes have not been shown in detail in order not to unnecessarily obscure the invention. It is intended that no part of this specification be construed to effect a disavowal of any part of the full scope of the invention. Hence, the following descriptions are intended to illustrate some particular embodiments of the disclosure, and not to exhaustively specify all permutations, combinations, and variations thereof.

[0009] Unless otherwise defined, all technical and scientific terms used herein have the same meaning as commonly understood by one of ordinary skill in the art to which this disclosure belongs. The terminology used in the description of the disclosure herein is for the purpose of describing particular aspects or embodiments only and is not intended to be limiting of the disclosure.

[0010] All publications, patent applications, patents, and other references cited herein are incorporated by reference in their entireties for the teachings relevant to the sentence and/or paragraph in which the reference is presented. References to techniques employed herein are intended to refer to the techniques as commonly understood in the art, including variations on those techniques or substitutions of equivalent techniques that would be apparent to one of skill in the art.

[0011] U.S. Patent Application Serial No. 14/827,375 ("the `375 application") discloses an apparatus that measures the sub-epidermal capacitance using a bipolar sensor, where the sub-epidermal capacitance corresponds to the moisture content of the target region of skin of a patient. The `375 application also discloses an array of these bipolar sensors of various sizes.

[0012] U.S. Patent Application Serial No. 15/134,110 discloses an apparatus for measuring sub-epidermal moisture (SEM), where the device emits and receives an RF signal at a frequency of 32 kHz through a single coaxial sensor and generates a bioimpedance signal, then converts a biocapacitance signal to a SEM value.

[0013] U.S. Patent Application Serial No. 13/942,649 discloses a compact perfusion scanner and method of characterizing tissue heath status incorporating optical sensors to monitor tissue blood perfusion measurements and oximetry.

[0014] WO2018144941 discloses an apparatus for measuring sub-epidermal moisture.

[0015] Unless the context indicates otherwise, it is specifically intended that the various features of the disclosure described herein can be used in any combination. Moreover, the present disclosure also contemplates that in some embodiments of the disclosure, any feature or combination of features set forth herein can be excluded or omitted.

[0016] The methods disclosed herein include and comprise one or more steps or actions for achieving the described method. The method steps and/or actions may be interchanged with

one another without departing from the scope of the present disclosure. In other words, unless a specific order of steps or actions is required for proper operation of the embodiment, the order and/or use of specific steps and/or actions may be modified without departing from the scope of the present disclosure.

[0017] As used in the description of the disclosure and the appended claims, the singular forms "a," "an," and "the" are intended to include the plural forms as well, unless the context clearly indicates otherwise.

[0018] As used herein, "and/or" refers to and encompasses any and all possible combinations of one or more of the associated listed items, as well as the lack of combinations when interpreted in the alternative ("or").

[0019] The terms "about" and "approximately" as used herein when referring to a measurable value such as a length, a frequency, or a SEM value and the like, is meant to encompass variations of ± 20%, ± 10%, ± 5%, ± 1%, ± 0.5%, or even ± 0.1% of the specified amount.

[0020] As used herein, phrases such as "between X and Y" and "between about X and Y" should be interpreted to include X and Y. As used herein, phrases such as "between about X and Y" mean "between about X and about Y" and phrases such as "from about X to Y" mean "from about X to about Y."

[0021] As used herein, the term "sub-epidermal moisture" or "SEM" refers to the increase in tissue fluid and local edema caused by vascular leakiness and other changes that modify the underlying structure of the damaged tissue in the presence of continued pressure on tissue, apoptosis, necrosis, and the inflammatory process.

[0022] As used herein, the term "biocapacitance" refers to the physical property that reflects the relative dielectric permittivity of the tissue, i.e. how much resistance to electrical fields is encountered in tissues.

[0023] As used herein, a "patient" may be a human or animal subject.

[0024] As used herein, the term "parallel" describes configurations where best-fit lines or planes of two objects have an approximately constant separation over a distance meaningful to the application. In certain embodiments, these best-fit lines or planes may have an included angle of ± 1 degree, ± 5 degrees, or ± 10 degrees.

[0025] As used herein, the term "planar" describes configurations where the actual surface of an object varies from a best-fit ideal plane by a distance that is not significant in the function of the object. In certain embodiments, the distance between the actual surface and the ideal plane may be 0.254 mm (0.010 inches), 1.27 mm (0.050 inches), or 2.54 mm (0.100 inches).

[0026] As used herein, the term "diameter" refers to the length of a straight line segment that

passes through the center of a circle and whose endpoints lie on the circle. The diameter is equal to twice the radius of the circle.

[0027] As used herein, the term "toroid" refers to a circular surface of revolution with a hole or an opening in its center. As used herein, the term "concentric" refers to two or more objects having the same center or axis.

[0028] As used herein, the term "printed film" refers to a segment of a polymeric film upon which conductive elements have been printed.

[0029] As used herein, the term "pogo pin" refers to a spring-loaded electrical connector mechanism.

[0030] Fig. 1A depicts a medical scanner 2, in accordance with the present disclosure. In an aspect, medical scanner 2 is an SEM scanner. In an aspect, medical scanner 2 is an SEM scanner that measures biocapacitance. In an aspect, the nose of the device, indicated by the dashed line circle 'A,' is pressed against the skin of a patient to make an SEM measurement. In an aspect, the nose of the device, indicated by the dashed line circle 'A,' is pressed against the skin of a patient to make a biocapacitance measurement.

[0031] Fig. 1B depicts a connector 10 comprising a reusable component 150, which is part of the medical scanner of Fig. 1A in the region 'A,' and a detachable element 100, in accordance with the present disclosure. In an aspect, detachable element 100 comprises a body 102 and a sensor formed from a center electrode 102a and a toroidal electrode 102b, where center electrode 102a and toroidal electrode 102b are concentric with respect to one another. Center electrode 102a has an outer-facing surface (visible in Fig. 1B) and an inner-facing surface (not visible in Fig. 1B). Similarly, toroidal electrode 102b has an outer-facing surface (visible in Fig. 1B) and an inner-facing surface (not visible in Fig. 1B).

[0032] In an aspect, detachable element 100 comprises a sensor formed from a plurality of electrodes such as up to two electrodes, up to three electrodes, up to four electrodes, up to five electrodes, up to six electrodes, up to seven electrodes, up to eight electrodes, up to nine electrodes, up to ten electrodes, up to eleven electrodes, or up to twelve electrodes. In an aspect, detachable element 100 comprises a plurality of sensors formed from a plurality of electrodes, where each sensor is formed from up to twelve electrodes, such as up to two electrodes, up to three electrodes, up to four electrodes, up to five electrodes, up to six electrodes, up to seven electrodes, up to eight electrodes, up to nine electrodes, up to ten electrodes, or up to eleven electrodes. In an aspect, a sensor is formed from an annular ring disposed around an inner circular electrode. In an aspect, a sensor is formed from two parallel bar electrodes. In an aspect, a sensor is formed from electrodes in the form of interdigitating fingers. In an aspect, detachable element 100 comprises a body 102 and a plurality of sensors selected from the group consisting of a plurality of bioimpedance sensors, a plurality of pressure sensors, a plurality of light sensors, a plurality of temperature sensors, a plurality of pH sensors, a plurality of perspiration sensors, a plurality of ultrasonic sensors, a plurality of

bone growth stimulator sensors, and a plurality of a combination of these sensors. In an aspect, detachable element 100 comprises a body 102 and a plurality of light sensors. In an aspect, detachable element 100 further comprises one or more light emitting sources comprising dual emitters configured for emitting 660 nm and 880 nm light. In an aspect, reusable component 150 comprises an alignment guide 158, the function of which is described in greater detail with reference to Fig. 5. In this example, detachable element 100 is mated to a reusable component by a linear movement, as indicated by the dashed line. In an aspect, the mating motion comprises a rotation perpendicular to the dashed line or twists about the dashed line. In an aspect, detachable element 100 comprises an insulating cover layer on top of its electrodes, forming a barrier between the electrodes and the patient's skin while measurements are being taken.

[0033] In an aspect, a sensor formed from an annular ring disposed around an inner circular electrode as depicted in Fig. 12. In an aspect, an inner circular electrode is defined by a diameter D1. In an aspect, D1 is about 4.318 mm (0.17 inches). In an aspect, the annular ring is defined by an inner diameter D2 and an outer diameter D3. In an aspect, D2 is about 10.16 mm (0.4 inches). In an aspect, D3 is about 12.7 mm (0.5 inches). In an aspect, D3 is greater than 12.7 mm (0.5 inches), such as about 20.32 mm (0.8 inches). In an aspect, the gap between an inner circular electrode and an outer annular ring is about 2.921 mm (0.115 inches). In an aspect, the gap between an inner circular electrode and an outer annular ring is defined by the formula (D2 - D1)/2.

[0034] In an aspect, a ground plane is provided. In an aspect, a sensor is separated from a ground plane by a distance D4. In an aspect, D4 is about 0.4064 mm (0.016 inches). In an aspect, a ground plane has a diameter D5. In an aspect, D5 is equal to D3. In an aspect, D5 is greater than D3. In an aspect, D5 is about 28.575 mm (1.125 inches).

[0035] In an aspect, the diameter of center electrode 102a is 2.54 mm (0.1 inches). In an aspect, the diameter of center electrode 102a is 2.794 mm (0.11 inches). In an aspect, the diameter of center electrode 102a is 3.048 mm (0.12 inches). In an aspect, the diameter of center electrode 102a is 3.302 mm (0.13 inches). In an aspect, the diameter of center electrode 102a is 3.556 mm (0.14 inches). In an aspect, the diameter of center electrode 102a is 3.81 mm (0.15 inches). In an aspect, the diameter of center electrode 102a is 4.064 mm (0.16 inches). In an aspect, the diameter of center electrode 102a is 4.318 mm (0.17 inches). In an aspect, the diameter of center electrode 102a is 4.572 mm (0.18 inches). In an aspect, the diameter of center electrode 102a is 4.826 mm (0.19 inches). In an aspect, the diameter of center electrode 102a is 5.08 mm (0.2 inches). In an aspect, the diameter of center electrode 102a is 5.588 mm (0.22 inches). In an aspect, the diameter of center electrode 102a is 6.096 mm (0.24 inches). In an aspect, the diameter of center electrode 102a is 6.604 mm (0.26 inches). In an aspect, the diameter of center electrode 102a is 7.112 mm (0.28 inches). In an aspect, the diameter of center electrode 102a is 7.62 mm (0.3 inches). In an aspect, the diameter of center electrode 102a is 8.89 mm (0.35 inches). In an aspect, the diameter of center electrode 102a is 10.16 mm (0.4 inches). In an aspect, the diameter of center electrode 102a is 11.43 mm (0.45 inches). In an aspect, the diameter of center electrode 102a is 12.7

mm (0.5 inches).

[0036] In an aspect, the diameter of center electrode 102a is at least 2.54 mm (0.1 inches). In an aspect, the diameter of center electrode 102a is at least 2.794 mm (0.11 inches). In an aspect, the diameter of center electrode 102a is at least 3.048 mm (0.12 inches). In an aspect, the diameter of center electrode 102a is at least 3.302 mm (0.13 inches). In an aspect, the diameter of center electrode 102a is at least 3.556 mm (0.14 inches). In an aspect, the diameter of center electrode 102a is at least 3.81 mm (0.15 inches). In an aspect, the diameter of center electrode 102a is at least 4.064 mm (0.16 inches). In an aspect, the diameter of center electrode 102a is at least 4.318 mm (0.17 inches). In an aspect, the diameter of center electrode 102a is at least 4.572 mm (0.18 inches). In an aspect, the diameter of center electrode 102a is at least 4.826 mm (0.19 inches). In an aspect, the diameter of center electrode 102a is at least 5.08 mm (0.2 inches). In an aspect, the diameter of center electrode 102a is at least 5.588 mm (0.22 inches). In an aspect, the diameter of center electrode 102a is at least 6.096 mm (0.24 inches). In an aspect, the diameter of center electrode 102a is at least 6.604 mm (0.26 inches). In an aspect, the diameter of center electrode 102a is at least 7.112 mm (0.28 inches). In an aspect, the diameter of center electrode 102a is at least 7.62 mm (0.3 inches). In an aspect, the diameter of center electrode 102a is at least 8.89 mm (0.35 inches). In an aspect, the diameter of center electrode 102a is at least 10.16 mm (0.4 inches). In an aspect, the diameter of center electrode 102a is at least 11.43 mm (0.45 inches). In an aspect, the diameter of center electrode 102a is at least 12.7 mm (0.5 inches).

[0037] In an aspect, the diameter of center electrode 102a is between 2.54 mm and 3.81 mm (between 0.1 inches and 0.15 inches). In an aspect, the diameter of center electrode 102a is between 3.81 mm and 5.08 mm (between 0.15 inches and 0.2 inches). In an aspect, the diameter of center electrode 102a is between 5.08 mm and 6.35 mm (between 0.2 inches and 0.25 inches). In an aspect, the diameter of center electrode 102a is between 6.35 mm and 7.62 mm (between 0.25 inches and 0.3 inches). In an aspect, the diameter of center electrode 102a is between 7.62 mm and 8.89 mm (between 0.3 inches and 0.35 inches). In an aspect, the diameter of center electrode 102a is between 8.89 mm and 10.16 mm (between 0.35 inches and 0.4 inches). In an aspect, the diameter of center electrode 102a is between 2.54 mm and 5.08 mm (between 0.1 inches and 0.2 inches). In an aspect, the diameter of center electrode 102a is between 2.54 mm and 7.62 mm (between 0.1 inches and 0.3 inches). In an aspect, the diameter of center electrode 102a is between 2.54 mm and 10.16 mm (between 0.1 inches and 0.4 inches). In an aspect, the diameter of center electrode 102a is between 2.54 mm and 12.7 mm (between 0.1 inches and 0.5 inches). In an aspect, the diameter of center electrode 102a is between 5.08 mm and 7.62 mm (between 0.2 inches and 0.3 inches). In an aspect, the diameter of center electrode 102a is between 7.62 mm and 10.16 mm (between 0.3 inches and 0.4 inches). In an aspect, the diameter of center electrode 102a is between 10.16 mm and 12.7 mm (between 0.4 inches and 0.5 inches). In an aspect, the diameter of center electrode 102a is between 2.54 mm and 7.62 mm (between 0.1 inches and 0.3 inches). In an aspect, the diameter of center electrode 102a is between 5.08 mm and 10.16 mm (between 0.2 inches and 0.4 inches). In an aspect, the diameter of center electrode 102a is between 7.62 mm and 12.7 mm (between 0.3 inches and 0.5 inches). In an aspect, the

diameter of center electrode 102a is between 2.54 mm and 12.7 mm (between 0.1 inches and 0.5 inches).

[0038] In an aspect, an annular or toroidal electrode has an inner diameter and an outer diameter. In an aspect, the inner diameter of toroidal electrode 102b is 2.54 mm (0.1 inches). In an aspect, the inner diameter of toroidal electrode 102b is 5.08 mm (0.2 inches). In an aspect, the inner diameter of toroidal electrode 102b is 7.62 mm (0.3 inches). In an aspect, the inner diameter of toroidal electrode 102b is 10.16 mm (0.4 inches). In an aspect, the inner diameter of toroidal electrode 102b is 12.7 mm (0.5 inches). In an aspect, the inner diameter of toroidal electrode 102b is 15.26 mm (0.6 inches). In an aspect, the inner diameter of toroidal electrode 102b is 17.78 mm (0.7 inches). In an aspect, the inner diameter of toroidal electrode 102b is 20.32 mm (0.8 inches). In an aspect, the inner diameter of toroidal electrode 102b is 22.86 mm (0.9 inches). In an aspect, the inner diameter of toroidal electrode 102b is 25.4 mm (1.0 inches). In an aspect, the inner diameter of toroidal electrode 102b is 30.48 mm (1.2 inches). In an aspect, the inner diameter of toroidal electrode 102b is 35.56 mm (1.4 inches). In an aspect, the inner diameter of toroidal electrode 102b is 40.64 mm (1.6 inches). In an aspect, the inner diameter of toroidal electrode 102b is 45.72 mm (1.8 inches). In an aspect, the inner diameter of toroidal electrode 102b is 50.8 mm (2.0 inches). In an aspect, the inner diameter of toroidal electrode 102b is 63.5 mm (2.5 inches). In an aspect, the inner diameter of toroidal electrode 102b is 76.2 mm (3.0 inches).

[0039] In an aspect, the inner diameter of toroidal electrode 102b is at least 2.54 mm (0.1 inches). In an aspect, the inner diameter of toroidal electrode 102b is at least 5.08 mm (0.2 inches). In an aspect, the inner diameter of toroidal electrode 102b is at least 7.62 mm (0.3 inches). In an aspect, the inner diameter of toroidal electrode 102b is at least 10.16 mm (0.4 inches). In an aspect, the inner diameter of toroidal electrode 102b is at least 12.7 mm (0.5 inches). In an aspect, the inner diameter of toroidal electrode 102b is at least 15.26 mm (0.6 inches). In an aspect, the inner diameter of toroidal electrode 102b is at least 17.78 mm (0.7 inches). In an aspect, the inner diameter of toroidal electrode 102b is at least 20.32 mm (0.8 inches). In an aspect, the inner diameter of toroidal electrode 102b is at least 22.86 mm (0.9 inches). In an aspect, the inner diameter of toroidal electrode 102b is at least 25.4 mm (1.0 inch). In an aspect, the inner diameter of toroidal electrode 102b is at least 30.48 mm (1.2 inches). In an aspect, the inner diameter of toroidal electrode 102b is at least 35.56 mm (1.4 inches). In an aspect, the inner diameter of toroidal electrode 102b is at least 40.64 mm (1.6 inches). In an aspect, the inner diameter of toroidal electrode 102b is at least 45.72 mm (1.8 inches). In an aspect, the inner diameter of toroidal electrode 102b is at least 50.8 mm (2.0 inches). In an aspect, the inner diameter of toroidal electrode 102b is at least 63.5 mm (2.5 inches). In an aspect, the inner diameter of toroidal electrode 102b is at least 76.2 mm (3.0 inches).

[0040] In an aspect, the inner diameter of toroidal electrode 102b is between 2.54 mm and 12.7 mm (between 0.1 inches and 0.5 inches). In an aspect, the inner diameter of toroidal electrode 102b is between 2.54 mm and 25.4 mm (between 0.1 inches and 1 inch). In an aspect, the inner diameter of toroidal electrode 102b is between 2.54 mm and 50.8 mm

(between 0.1 inches and 2.0 inches). In an aspect, the inner diameter of toroidal electrode 102b is between 2.54 mm and 76.2 mm (between 0.1 inches and 3.0 inches). In an aspect, the inner diameter of toroidal electrode 102b is between 12.7 mm and 25.4 mm (between 0.5 inches and 1.0 inch). In an aspect, the inner diameter of toroidal electrode 102b is between 12.7 mm and 38.1 mm (between 0.5 inches and 1.5 inches). In an aspect, the inner diameter of toroidal electrode 102b is between 25.4 mm and 38.1 mm (between 1.0 inch and 1.5 inches). In an aspect, the inner diameter of toroidal electrode 102b is between 38.1 mm and 50.8 mm (between 1.5 inches and 2.0 inches). In an aspect, the inner diameter of toroidal electrode 102b is between 50.8 mm and 76.2 mm (between 2.0 inches and 3.0 inches).

[0041] In an aspect, the outer diameter of toroidal electrode 102b is 2.54 mm (0.1 inches). In an aspect, the outer diameter of toroidal electrode 102b is 5.08 mm (0.2 inches). In an aspect, the outer diameter of toroidal electrode 102b is 7.62 mm (0.3 inches). In an aspect, the outer diameter of toroidal electrode 102b is 10.16 mm (0.4 inches). In an aspect, the outer diameter of toroidal electrode 102b is 12.7 mm (0.5 inches). In an aspect, the outer diameter of toroidal electrode 102b is 15.26 mm (0.6 inches). In an aspect, the outer diameter of toroidal electrode 102b is 17.78 mm (0.7 inches). In an aspect, the outer diameter of toroidal electrode 102b is 20.32 mm (0.8 inches). In an aspect, the outer diameter of toroidal electrode 102b is 22.86 mm (0.9 inches). In an aspect, the outer diameter of toroidal electrode 102b is 25.4 mm (1.0 inches). In an aspect, the outer diameter of toroidal electrode 102b is 30.48 mm (1.2 inches). In an aspect, the outer diameter of toroidal electrode 102b is 35.56 mm (1.4 inches). In an aspect, the outer diameter of toroidal electrode 102b is 40.64 mm (1.6 inches). In an aspect, the outer diameter of toroidal electrode 102b is 45.72 mm (1.8 inches). In an aspect, the outer diameter of toroidal electrode 102b is 50.8 mm (2.0 inches). In an aspect, the outer diameter of toroidal electrode 102b is 63.5 mm (2.5 inches). In an aspect, the outer diameter of toroidal electrode 102b is 76.2 mm (3.0 inches).

[0042] In an aspect, the outer diameter of toroidal electrode 102b is at least 2.54 mm (0.1 inches). In an aspect, the outer diameter of toroidal electrode 102b is at least 5.08 mm (0.2 inches). In an aspect, the outer diameter of toroidal electrode 102b is at least 7.62 mm (0.3 inches). In an aspect, the outer diameter of toroidal electrode 102b is at least 10.16 mm (0.4 inches). In an aspect, the outer diameter of toroidal electrode 102b is at least 12.7 mm (0.5 inches). In an aspect, the outer diameter of toroidal electrode 102b is at least 15.26 mm (0.6 inches). In an aspect, the outer diameter of toroidal electrode 102b is at least 17.78 mm (0.7 inches). In an aspect, the outer diameter of toroidal electrode 102b is at least 20.32 mm (0.8 inches). In an aspect, the outer diameter of toroidal electrode 102b is at least 22.86 mm (0.9 inches). In an aspect, the outer diameter of toroidal electrode 102b is at least 25.4 mm (1.0 inch). In an aspect, the outer diameter of toroidal electrode 102b is at least 30.48 mm (1.2 inches). In an aspect, the outer diameter of toroidal electrode 102b is at least 35.56 mm (1.4 inches). In an aspect, the outer diameter of toroidal electrode 102b is at least 40.64 mm (1.6 inches). In an aspect, the outer diameter of toroidal electrode 102b is at least 45.72 mm (1.8 inches). In an aspect, the outer diameter of toroidal electrode 102b is at least 50.8 mm (2.0 inches). In an aspect, the outer diameter of toroidal electrode 102b is at least 63.5 mm (2.5 inches). In an aspect, the outer diameter of toroidal electrode 102b is at least 76.2 mm (3.0

inches).

[0043] In an aspect, the outer diameter of toroidal electrode 102b is between 2.54 mm and 12.7 mm (between 0.1 inches and 0.5 inches). In an aspect, the outer diameter of toroidal electrode 102b is between 2.54 mm and 25.4 mm (between 0.1 inches and 1 inch). In an aspect, the outer diameter of toroidal electrode 102b is between 2.54 mm and 50.8 mm (between 0.1 inches and 2.0 inches). In an aspect, the outer diameter of toroidal electrode 102b is between 2.54 mm and 76.2 mm (between 0.1 inches and 3.0 inches). In an aspect, the outer diameter of toroidal electrode 102b is between 12.7 mm and 25.4 mm (between 0.5 inches and 1.0 inch). In an aspect, the outer diameter of toroidal electrode 102b is between 12.7 mm and 38.1 mm (between 0.5 inches and 1.5 inches). In an aspect, the outer diameter of toroidal electrode 102b is between 25.4 mm and 38.1 mm (between 1.0 inch and 1.5 inches). In an aspect, the outer diameter of toroidal electrode 102b is between 38.1 mm and 50.8 mm (between 1.5 inches and 2.0 inches). In an aspect, the outer diameter of toroidal electrode 102b is between 50.8 mm and 76.2 mm (between 2.0 inches and 3.0 inches).

[0044] In an aspect, D4 is 0.254 mm (0.01 inches). In an aspect, D4 is 0.2794 mm (0.011 inches). In an aspect, D4 is 0.3048 mm (0.012 inches). In an aspect, D4 is 0.3302 mm (0.013 inches). In an aspect, D4 is 0.3556 mm (0.014 inches). In an aspect, D4 is 0.381 mm (0.015 inches). In an aspect, D4 is 0.4064 mm (0.016 inches). In an aspect, D4 is 0.4318 mm (0.017 inches). In an aspect, D4 is 0.4572 mm (0.018 inches). In an aspect, D4 is 0.4826 mm (0.019 inches). In an aspect, D4 is 0.508 mm (0.02 inches). In an aspect, D4 is 0.635 mm (0.025 inches). In an aspect, D4 is 0.762 mm (0.03 inches).

[0045] In an aspect, D4 is at least 0.254 mm (0.01 inches). In an aspect, D4 is at least 0.2794 mm (0.011 inches). In an aspect, D4 is at least 0.3048 mm (0.012 inches). In an aspect, D4 is at least 0.3302 mm (0.013 inches). In an aspect, D4 is at least 0.3556 mm (0.014 inches). In an aspect, D4 is at least 0.381 mm (0.015 inches). In an aspect, D4 is at least 0.4064 mm (0.016 inches). In an aspect, D4 is at least 0.4318 mm (0.017 inches). In an aspect, D4 is at least 0.4572 mm (0.018 inches). In an aspect, D4 is at least 0.4826 mm (0.019 inches). In an aspect, D4 is at least 0.508 mm (0.02 inches). In an aspect, D4 is at least 0.635 mm (0.025 inches). In an aspect, D4 is at least 0.762 mm (0.03 inches).

[0046] In an aspect, D4 is between 0.254 mm and 0.508 mm (between 0.01 inches and 0.02 inches). In an aspect, D4 is between 0.254 mm and 0.762 mm (between 0.01 inches and 0.03 inches). In an aspect, D4 is between 0.381 mm and 0.508 mm (between 0.015 inches and 0.02 inches). In an aspect, D4 is between 0.381 mm and 0.762 mm (between 0.015 inches and 0.03 inches). In an aspect, D4 is between 0.508 mm and 0.762 mm (between 0.02 inches and 0.03 inches).

[0047] In an aspect, D5 is between 2.54 mm and 12.7 mm (between 0.1 inches and 0.5 inches). In an aspect, D5 is between 2.54 mm and 25.4 mm (between 0.1 inches and 1 inch). In an aspect, D5 is between 2.54 mm and 50.8 mm (between 0.1 inches and 2.0 inches). In an aspect, D5 is between 2.54 mm and 76.2 mm (between 0.1 inches and 3.0 inches). In an

aspect, D5 is between 12.7 mm and 25.4 mm (between 0.5 inches and 1.0 inch). In an aspect, D5 is between 12.7 mm and 38.1 mm (between 0.5 inches and 1.5 inches). In an aspect, D5 is between 25.4 mm and 38.1 mm (between 1.0 inch and 1.5 inches). In an aspect, D5 is between 38.1 mm and 50.8 mm (between 1.5 inches and 2.0 inches). In an aspect, D5 is between 50.8 mm and 76.2 mm (between 2.0 inches and 3.0 inches).

[0048] Fig. 2 is a perspective view of the underside of detachable element 100 of Fig. 1B, in accordance with the present disclosure. In an aspect, detachable element 100 comprises a body 102 having, in this example, four wings 104 separated by gaps 106 and alignment feature 108. In an aspect, body 102 comprises up to twenty wings, such as up to five wings, up to six wings, up to seven wings, up to eight wings, up to nine wings, up to ten wings, up to eleven wings, up to twelve wings, up to thirteen wings, up to fourteen wings, up to fifteen wings, up to sixteen wings, up to seventeen wings, up to eighteen wings, or up to nineteen wings. In an aspect, alignment feature 108 is configured to mate with the alignment guide 158 of reusable component 150 (e.g. shown in Fig. 3). In an aspect, gaps 106 cannot mate with alignment guide 158, for example, because gaps 106 are narrower than alignment feature 108.

[0049] In an aspect, contactors 124 are attached to a printed circuit board (PCB) 120 that is coupled to the body 102. In one aspect, a plurality of contactors are coupled to body 102, such as up to one hundred contactors, up to ninety contactors, up to eighty contactors, up to seventy contactors, up to sixty contactors, up to fifty contactors, up to forty contactors, up to thirty contactors, up to twenty contactors, up to fifteen contactors, up to ten contactors, up to nine contactors, up to eight contactors, up to seven contactors, up to six contactors, up to five contactors, up to four contactors, or up to three contactors. In this example, each contactor 124 has two cantilever elements 126 that are independently movable. In an aspect, each contactor 124 comprises up to ten cantilever elements, such as up to nine cantilever elements, up to eight cantilever elements, up to seven cantilever elements, up to six cantilever elements, up to five cantilever elements, up to four cantilever elements, or up to three cantilever elements. In an aspect, the inside surface of at least some of wings 104 have a retention feature 110 that, in this example, extends out from the inside surface of the wing 104. In an aspect, each of wings 104 has a retention feature 110. In an aspect, retention feature 110 is a recess. In an aspect, each contactor 124 provides an electrical connection between an electrode of body 102 and PCB 120.

[0050] Fig. 3 is a perspective view of the top surface of reusable component 150, in accordance with the present disclosure. In an aspect, the reusable component 150 comprises a body 152 to which is coupled to a PCB having a top surface 162. In an aspect, a plurality of planar contact surfaces are coupled to surface 162, such as up to 100 planar contact surfaces, up to 90 planar contact surfaces, up to 80 planar contact surfaces, up to 70 planar contact surfaces, up to 60 planar contact surfaces, up to 50 planar contact surfaces, up to 40 planar contact surfaces, up to 30 planar contact surfaces, up to 20 planar contact surfaces, up to 10 planar contact surfaces, up to 9 planar contact surfaces, up to 8 planar contact surfaces, up to 7 planar contact surfaces, up to 6 planar contact surfaces, up to 5 planar contact surfaces, up

to 4 planar contact surfaces, or up to 3 planar contact surfaces.

[0051] In an aspect, three planar contact surfaces 160a, 160b, and 160c are coupled to surface 162. In an aspect, contact surfaces 160a, 160b, 160c are formed as copper layers on the surface 162 and are generally coplanar (within a few thousands of an inch) with the surface 162. Contact surfaces 160a, 160b, 160c are conductive and, in an aspect, connected to circuits that are electrically isolated from each other. In an aspect, contact surfaces 160a, 160b, 160c comprise a surface coating of a noble metal, for example, gold, that may be mixed with other materials to improve physical properties, for example, abrasion resistance.

[0052] In an aspect, contact surfaces 160a, 160b, 160c are each planar and lie on a common plane that is parallel to the retention groove.

[0053] In an aspect, a contactor 124 comprises conductive material. In an aspect, a contactor 124 comprises a conductive compressible foam. In an aspect, a contactor 124 is conductively attached to PCB 120 and is configured to compress against any one of three planar contact surfaces 160a, 160b, and 160c when detachable element 100 (e.g. shown in Fig. 2) is installed on reusable component 150. In an aspect, a contactor 124 is configured to compress against any one of three planar contact surfaces 160a, 160b, and 160c when detachable element 100 (e.g. shown in Fig. 2) is installed on reusable component 150.

[0054] In an aspect, a contactor 124 comprises a non-conductive material. In an aspect, a contactor 124 comprises a non-conductive compressible foam. In an aspect, a contactor 124 comprises a non-conductive spring element and a separate conductive element, where the conductive element is conductively attached to PCB 120 on one end and to a free end of the non-conductive spring element. In an aspect, a conductive element exposed on a free end of a non-conductive spring element is held against any one of three planar contact surfaces 160a, 160b, and 160c by the non-conductive spring element when detachable element 100 (e.g. shown in Fig. 2) is installed on reusable component 150. In an aspect, a conductive element is a conductive wire.

[0055] In an aspect, a cantilever element 126 comprises a conductive material. In an aspect, a cantilever element 126 comprises a conductive compressible foam. In an aspect, a cantilever element 126 comprise a metallic coil spring.

[0056] In an aspect, a cantilever element 126 comprises a non-conductive material. In an aspect, a cantilever element 126 comprises a non-conductive compressible foam.

[0057] In an aspect, a contactor 124 comprises a compressible pogo pin, where the pogo pin is of suitable height in its compressed state to conductively join PCB 120 to planar contact surfaces 160a, 160b, and 160c when detachable element 100 (e.g. shown in Fig. 2) is installed on reusable component 150.

[0058] Fig. 4 is a side view of the reusable component 150, in accordance with the present

disclosure. In an aspect, reusable component 150 comprises a retention groove 154 and alignment guide 158. In an aspect, the retention groove 154 extends around only a portion of a circumference of reusable component 150. Likewise, in an aspect, retention feature 110 (e.g. shown in Fig. 2) extends around only a portion of a circumference of detachable element 100 (e.g. shown in Fig. 2). In an aspect, retention groove 154 is partially configured as a flush or protruding element. In an aspect, retention groove 154 may have any geometry selected to interact with one or more of retention feature 110 (e.g. shown in Fig. 2), each having a complementary geometry, so as to retain detachable element 100 (e.g. shown in Fig. 2) on the reusable component 150 under determined loads.

[0059] Fig. 5 is a side view of detachable element 100 mated with reusable component 150, in accordance with the present disclosure. In an aspect, alignment feature 108 is mated with alignment guide 158.

[0060] Fig. 6 is a cross-section of the side view of Fig. 5, in accordance with the present disclosure. Retention feature 110 is engaged with retention groove 154. In an aspect, contactor 124 is coupled to the underside surface 122 of the PCB 120. In an aspect, free length of contactor 124 is greater than the separation distance between underside surface 122 and top surface 162 of PCB 164.

[0061] Fig. 7A is another perspective view of the underside of the detachable element 100 of Fig. 1B, in accordance with the present disclosure. An enlarged view of region 'B' is shown in Fig. 8.

[0062] Fig. 7B is a partially exploded view of the detachable element 100 of Fig. 7A, in accordance with the present disclosure. In an aspect, body 102 has a center hole 190 with several retention pockets 180 around perimeter 192. In an aspect, each retention pocket 180 has a staking post 182 and a reference surface 184.

[0063] In an aspect, PCB 120 has an underside surface 122 with an outer edge 122a. In an aspect, outer edge 122a is circular. In an aspect, outer edge 122a may be of any shape. In an aspect, the contactors 124 have flanges 128 that extend beyond the outer edge 122a. In an aspect, each flange 128 has a center hole 128a and a top surface 128b. In an aspect, when PCB 120 is brought into contact with body 102, center holes 128a will fit over posts 182 as indicated by the dashed-line arrows and top surfaces 128b will contact reference surfaces 184.

[0064] In an aspect, the arrangement of PCB 120 fits closely into hole 190, where flanges 128 extending beyond the edge of outer edge 122a, and the reference surfaces adjacent to hole 190 allow PCB 120 to be inserted into hole 190 from below. In an aspect, by selection of an appropriate offset distance from reference surface 184 to top surface 153 (not visible in Fig. 7B, shown in Fig. 3) of body 102, surface 162 (not visible in Fig. 7B, shown in Fig. 3) of PCB 120 can be held coplanar with top surface 153 or at a determined offset above or below top surface 153. In an aspect, the distance from reference surface 184 to top surface 153 may be equal to, greater than, or less than the thickness of PCB 120. In an aspect, one or more of the

flanges 128 may be functionally replaced with other elements that are not integral with contactors 124, for example, a formed sheet metal tab, that is coupled to PCB 120 and extends beyond outer edge 122a.

[0065] Fig. 8 is an enlarged cross-section of the region marked 'B' in Fig. 7A, in accordance with the present disclosure. In an aspect, top surface 128b is shown in contact with reference surface 184 and post 182 passing through center hole 128a.

[0066] In Fig. 8, cantilever element 126 is formed by base segment 126e that is coupled, for example, by soldering, to PCB 120, a cantilever element comprising a first linear segment 126a, an angled coupler 126b, a second linear segment 126c, and a curved contact segment 126d. In an aspect, when detachable element 100 (e.g. as shown in Fig. 1B) is brought together with reusable component 150, as indicated in Fig. 1B, curved contact segment 126d will contact planar contact surface 160a (e.g. as shown in Fig. 3). In an aspect, as the free height of contactor 124 is greater than the final gap between surfaces 122 and 166, as seen in Fig. 6, contactor 124 must compress as detachable element 100 (e.g. as shown in Fig. 1B) is seated onto reusable component 150 (e.g. as shown in Fig. 1B). In an aspect, as this compression occurs, first linear segment 126a, angled coupler 126b, and second linear segment 126c of the cantilever element will elastically deform and the included angle 127 between segments 126a and 126c will decrease. In an aspect, for example, when first linear segment 126a is shorter than second linear segment 126c, the point of contact between curved contact segment 126d and planar contact surface 160a (e.g. as shown in Fig. 3) will move in an arc having both vertical and horizontal movement, in the reference frame of Fig. 8. In an aspect, the horizontal motion creates a desirable sliding contact between curved contact segment 126d and planar contact surface 160a (e.g. as shown in Fig. 3), which improves the quality and reliability of the electrical contact between contact segment 126d and planar contact surface 160a.

[0067] In an aspect, contactor 124 may be formed as any compliant element that accomplishes the same function of providing an electrical connection between an element of PCB 120 and a conductive element of reusable component 150 (e.g. shown in Fig. 3), for example, a planar contact surface 160a (e.g. shown in Fig. 3), when compressed between surfaces 122 and 162 (e.g. shown in Fig. 3). In an aspect, contactor 124 may be any compliant element having a conductive portion, for example, a pogo pin, a coil spring, a conductive foam pad, or a directionally conductive adhesive.

[0068] In an aspect, detachable element 100 and reusable component 150 (e.g. shown in Fig. 1B) may be configured such that the act of mating detachable element 100 and reusable component 150 (e.g. shown in Fig. 1B) induces a twisting or sliding motion that induces a scrubbing contact of contactor 124 and planar contact surface 160a (e.g. shown in Fig. 3).

[0069] Fig. 9 is a second cross-section showing the configuration of the region 'B' after a heat-staking operation has been complete, in accordance with the present disclosure. In an aspect, post 182 (e.g. shown in Fig. 7B) has been reshaped, for example, by heat staking, to form a

cap 132a with an enlarged diameter that overlaps flange 128, thereby retaining underside surface 122 of PCB 120 to body 102. In an aspect, PCB 120 may be retained to body 102 by mechanical attachment, for example, a fastener (not shown in Fig. 9), or by clamping, for example, by insertion of a retention fitting (not shown in Fig. 9), by bonding, for example, UV-cured cyanoacrylate (not shown in Fig. 9), or by any attachment method known to those of skill in the art.

[0070] Figure 10 is an exploded view of an assembly 200 comprising a body 102, a PCB 120, and a retainer 230. In an aspect, body 102 is a portion of a housing of a device. In an aspect, assembly 200 is a disposable attachment to a device.

[0071] Body 102 comprises an opening 213 that, in this example, is a circular through-hole penetrating from a first surface 212 to a second surface 211. In an aspect, opening 213 is a notch or other open shape and may have an arbitrary shape defined by a perimeter 214. In this example, there is a lip or surface 216 recessed from a second surface 211. In this example, surface 216 is separated from a first surface 212 by a distance that is equal to the thickness of PCB 120. In an aspect, the separation of surfaces 212 and 216 is dependent upon the configuration of retainer 230. Surface 216 may have a diameter defined by a perimeter 218. In an aspect, surface 216 is coincident with second surface 211. In one aspect, surface 216 is comprised of multiple separate surfaces (not shown in Fig. 10) adjacent to opening 213, wherein multiple separate surfaces may be coplanar or may be displaced from each other.

[0072] In an aspect, PCB 120 has a thickness of 0.127 mm (0.005 inches). In an aspect, PCB 120 has a thickness of 0.254 mm (0.01 inches). In an aspect, PCB 120 has a thickness of 0.3048 mm (0.012 inches). In an aspect, PCB 120 has a thickness of 0.3556 mm (0.014 inches). In an aspect, PCB 120 has a thickness of 0.4064 mm (0.016 inches). In an aspect, PCB 120 has a thickness of 0.4572 mm (0.018 inches). In an aspect, PCB 120 has a thickness of 0.508 mm (0.02 inches). In an aspect, PCB 120 has a thickness of 0.635 mm (0.025 inches). In an aspect, PCB 120 has a thickness of 0.762 mm (0.03 inches). In an aspect, PCB 120 has a thickness of 1.016 mm (0.04 inches). In an aspect, PCB 120 has a thickness of 1.27 mm (0.05 inches).

[0073] In an aspect, PCB 120 has a thickness of at least 0.127 mm (0.005 inches). In an aspect, PCB 120 has a thickness of at least 0.254 mm (0.01 inches). In an aspect, PCB 120 has a thickness of at least 0.3048 mm (0.012 inches). In an aspect, PCB 120 has a thickness of at least 0.3556 mm (0.014 inches). In an aspect, PCB 120 has a thickness of at least 0.4064 mm (0.016 inches). In an aspect, PCB 120 has a thickness of at least 0.4572 mm (0.018 inches). In an aspect, PCB 120 has a thickness of at least 0.508 mm (0.02 inches). In an aspect, PCB 120 has a thickness of at least 0.635 mm (0.025 inches). In an aspect, PCB 120 has a thickness of at least 0.762 mm (0.03 inches). In an aspect, PCB 120 has a thickness of at least 1.016 mm (0.04 inches). In an aspect, PCB 120 has a thickness of at least 1.27 mm (0.05 inches).

[0074] In an aspect, PCB 120 has a thickness of between 0.127 mm and 0.254 mm (between

0.005 inches and 0.01 inches). In an aspect, PCB 120 has a thickness of between 0.127 mm and 0.381 mm (between 0.005 inches and 0.015 inches). In an aspect, PCB 120 has a thickness of between 0.127 mm and 0.508 mm (between 0.005 inches and 0.02 inches). In an aspect, PCB 120 has a thickness of between 0.127 mm and 0.635 mm (between 0.005 inches and 0.025 inches). In an aspect, PCB 120 has a thickness of between 0.127 mm and 0.762 mm (between 0.005 inches and 0.03 inches). In an aspect, PCB 120 has a thickness of between 0.127 mm and 1.016 mm (between 0.005 inches and 0.04 inches). In an aspect, PCB 120 has a thickness of between 0.127 mm and 1.27 mm (between 0.005 inches and 0.05 inches). In an aspect, PCB 120 has a thickness of between 0.254 mm and 0.381 mm (between 0.01 inches and 0.015 inches). In an aspect, PCB 120 has a thickness of between 0.254 mm and 0.508 mm (between 0.01 inches and 0.02 inches). In an aspect, PCB 120 has a thickness of between 0.254 mm and 0.635 mm (between 0.01 inches and 0.025 inches). In an aspect, PCB 120 has a thickness of between 0.254 mm and 0.762 mm (between 0.01 inches and 0.03 inches). In an aspect, PCB 120 has a thickness of between 0.254 mm and 1.016 mm (between 0.01 inches and 0.04 inches). In an aspect, PCB 120 has a thickness of between 0.254 mm and 1.27 mm (between 0.01 inches and 0.05 inches). In an aspect, PCB 120 has a thickness of between 0.381 mm and 0.508 mm (between 0.015 inches and 0.02 inches). In an aspect, PCB 120 has a thickness of between 0.381 mm and 0.635 mm (between 0.015 inches and 0.025 inches). In an aspect, PCB 120 has a thickness of between 0.381 mm and 1.27 mm (between 0.015 inches and 0.05 inches). In an aspect, PCB 120 has a thickness of between 0.508 mm and 0.762 mm (between 0.02 inches and 0.03 inches). In an aspect, PCB 120 has a thickness of between 0.508 mm and 1.27 mm (between 0.02 inches and 0.05 inches). In an aspect, PCB 120 has a thickness of between 0.762 mm and 1.016 mm (between 0.03 inches and 0.04 inches). In an aspect, PCB 120 has a thickness of between 0.762 mm and 1.27 mm (between 0.03 inches and 0.05 inches). In an aspect, PCB 120 has a thickness of between 1.016 mm and 1.27 mm (between 0.04 inches and 0.05 inches).

[0075] PCB 120 is, in this example, a flat substrate of a nonconductive material, for example FR4, that is typical of printed circuit board fabrication processes. In an aspect, PCB 120 is a sensor. In one aspect, a sensor is selected from the group consisting of a bioimpedance sensor, a photodetector, a temperature sensor, a pH sensor, a perspiration sensor, an ultrasonic sensor, a bone growth stimulator sensor, and a combination thereof. PCB 120 has an underside surface 122 and an upper surface 224 that is parallel to the underside surface 122 and separated from the underside surface 122 by a thickness. PCB 120 has a perimeter 226 that, in this example, is circular and matches surface 216 of body 102. In an aspect, the shape of perimeter 226 is arbitrary. In an aspect, the shape of perimeter 226 is oval-shaped. In an aspect, the shape of perimeter 226 is square-shaped.

[0076] Retainer 230 comprises a body 232 and a plurality of tabs 234 formed such that a portion of retainer 230 extends beyond the perimeter of PCB 120 when retainer 230 is attached to PCB 120. Tabs 234 are positioned and shaped to contact surface 216 when the joined PCB-retainer subassembly is inserted into opening 213.

[0077] In an aspect, retainer 230 is strictly a mechanical positioning element that may be

soldered to PCB 120 or attached via any other method, including adhesives and mechanical attachment such as a rivet or screw. In an aspect, a portion of retainer 230 is a conductive circuit element, such as a spring contactor 124 intended to make conductive contact with an external circuit element (not shown in Fig. 10) associated with body 102. In an aspect, retainer 230 is an assembly comprising one or more conductive elements and one or more non-conductive elements. In an aspect, retainer 230 is formed from metal. In one aspect, retainer 230 is formed from a non-metal material such as a plastic.

[0078] Figure 11A is a cross-section of body 102, PCB 120, and retainer 230 of Fig. 10 aligned while separated from each other in an "exploded" view. In this example, body 102 comprises a retention feature 208, formed as part of body 102, whose function is described below in [0097].

[0079] Figure 11B is a cross-section of body 102, the PCB 120, and retainer 230 of Fig. 11A after they have been assembled into assembly 200. In this example, surface 216 is coincident with a second surface of body 102. In this example, retention feature 208 of Fig. 11A has been deformed, for example, by thermal forming or ultrasonic staking, so as to cover a portion of retainer 230, in particular a portion of one or more of tabs 234. In one aspect, other retention mechanisms, for example, the application of an adhesive or sealant over one or more of tabs 234 and a portion of body 102, is used to retain retainer-PCB subassembly in the frame.

[0080] Figure 13A is an exploded view of an assembly 300 comprising a body 310 having an upper section 310a and a lower section 310b joined by a flexible arm 310c. Upper section 310a comprises an opening 313 that, in this example, is a circular through-hole. Lower section 310b is attached on its underside surface to a compressible spring element 320 which allows for movement of both lower section 310b and flexible arm 310c when downward pressure is applied. In an aspect, upper section 310a and lower section 310b may be reversibly secured by way of a tab or other locking mechanism. In an aspect, assembly 300 is formed into a cap as PCB 120 (e.g. shown in Fig. 2) that can be inserted into body 102.

[0081] Assembly 300 further comprises a printed film 330 having a tabbed section 330a and a non-tabbed section 330b. A center electrode 350a and an outer electrode 350b (e.g. shown in Fig. 13B) have been printed on the upper face of tabbed section 330a. In this example, tabbed section 330a is inserted between upper section 310a and lower section 310b so that, upon full insertion, electrodes 350a and 350b (e.g. shown in Fig. 13B) are exposed on the upper surface of body 310 through opening 313. The non-tabbed section 330b is folded or bent so that the end of non-tabbed section 330b is wrapped around, and may be attached to, the underside surface of compressible spring element 320. In an aspect, body 310 having electrodes 350a and 350b (e.g. shown in Fig. 13B) exposed through opening 313 is pressed against the skin of a patient to make an SEM measurement.

[0082] Figure 13B is a top view of one side of printed film 330 prior to bending or folding. In this example, non-tabbed section 330b of printed film 330 comprises three contact pads 340a, 340b, and 340c. Center electrode 350a is connected via a conductive trace 360a to contact pad 340a. Similarly, outer electrode 350b is connected via a conductive trace 360b to contact

pad 340b. When upper section of 310a (e.g. shown in Fig. 13A) is pressed upon a patient's skin, measurements can be taken by electrodes 350a and 350b.

[0083] In an aspect, printed film 330 comprises a flexible plastic material. In a related aspect, the flexible plastic material is selected from the group consisting of polyethylene naphthalene (PEN), polycarbonate (PC), polyethylene terephthalate (PET), polyarylate (PAR), polyethersulfone (PES), fluorene polyester (FPE), polyimide (PI), and combinations thereof. In another aspect, printed film 330 comprises a non-plastic flexible material.

[0084] In an aspect, printed film 330 has a thickness of 0.5 mm (0.02 inches). In an aspect, printed film 330 has a thickness of 0.4 mm (0.016 inches). In an aspect, printed film 330 has a thickness of 0.3 mm (0.012 inches). In an aspect, printed film 330 has a thickness of 0.25 mm (0.01 inches). In an aspect, printed film 330 has a thickness of at least 0.2 mm (0.008 inches). In an aspect, printed film 330 has a thickness of at least 0.5 mm (0.02 inches). In an aspect, printed film 330 has a thickness of at least 0.4 mm (0.016 inches). In an aspect, printed film 330 has a thickness of at least 0.3 mm (0.012 inches). In an aspect, printed film 330 has a thickness of at least 0.25 mm (0.01 inches). In an aspect, printed film 330 has a thickness of at least at least 0.2 mm (0.008 inches). In an aspect, printed film 330 has a thickness that is between 0.4 and 0.5 mm (0.02 and 0.016 inches). In an aspect, printed film 330 has a thickness that is between 0.3 and 0.4 mm (0.012 and 0.016 inches). In an aspect, printed film 330 has a thickness that is between 0.2 and 0.3 mm (0.008 and 0.012 inches). In an aspect, printed film 330 has a thickness that is between 0.25 and 0.35 mm (0.01 and 0.014 inches). In an aspect, printed film 330 has a thickness that is between 0.2 and 0.5 mm (0.008 and 0.02 inches).

[0085] In an aspect, printed film 330 is cut from a larger flexible sheet. In an aspect, electrodes 350a and 350b, conductive traces 360a and 360b, and contact pads 340a, 340b, and 340c are printed onto one face of a larger flexible sheet prior to cutting. In an aspect, more than one printed film 330 is cut from the same flexible sheet. In an aspect, conductive ink is used to print electrodes 350a and 350b, conductive traces 360a and 360b, and contact pads 340a, 340b, and 340c onto one face of a flexible sheet prior to cutting. In an aspect, electrodes 350a and 350b, conductive traces 360a and 360b, and contact pads 340a, 340b, and 340c are printed onto one face of a flexible sheet by a 2D or 3D printing process known in the art that is suitable for the manufacture of printed electronics. In an aspect, each printed film 330 is die-cut from a larger flexible sheet. In an aspect, electrodes 350a and 350b, conductive traces 360a and 360b, and contact pads 340a, 340b, and 340c are printed on a precut piece of film.

[0086] From the foregoing, it will be appreciated that the present invention is defined by the appended claims.

REFERENCES CITED IN THE DESCRIPTION

Cited references

This list of references cited by the applicant is for the reader's convenience only. It does not form part of the European patent document. Even though great care has been taken in compiling the references, errors or omissions cannot be excluded and the EPO disclaims all liability in this regard.

Patent documents cited in the description

- US827375 [0011]
- US134110 [0012]
- US942649 [0013]
- WO2018144941A [0014]

Patentkrav

1. Aftageligt element (100) konfigureret til fastgørelse til en indretning (2) for at måle vævsskade igennem måling af sub-epidermal fugt, hvilket aftagelige element omfatter:

et legeme (102) der omfatter et tilbageholdelseselement konfigureret til at indgribe en tilbageholdelsesrille i indretningen til måling af vævsskade, hvilket legeme omfatter en sensor der omfatter to elektroder (102a, 102b), hvor sensoren er i elektrisk forbindelse med en elektrisk kontaktor (124);
den elektriske kontaktor er koblet til legemet, hvor kontaktoren omfatter et fritbærende element der er konfigureret til at røre den plane kontaktflade når tilbageholdelseselementet er i indgreb med tilbageholdelsesrillen, hvor det fritbærende element er konfigureret til at glide langs kontaktfladen idet det aftagelige element bringes sammen med en genanvendelig komponent (150) af indretningen til måling af vævsskade igennem måling af sub-epidermal fugt; og
en printpladeanordning der omfatter en printplade (PCB, 120) der har en yderkant, hvor PCB'en er koblet til kontaktoren og til legemet,
hvor en del af kontaktoren strækker sig længere end yderkanten af PCB'en, og
hvor delen af kontaktoren der strækker sig længere end yderkanten af PCB'en er koblet til legemet.

2. Det aftagelige element ifølge krav 1, hvor det aftagelige element bringes sammen med den genanvendelige komponent langs en vej der er vinkelret på den plane kontaktflade.

3. Det aftagelige element ifølge krav 1, hvor tilbageholdelseselementet strækker sig omkring en del af en omkreds af det aftagelige element.

4. Det aftagelige element ifølge krav 1, hvor legemet omfatter et opretningselement der er konfigureret til passe sammen med opretningsføringen af den genanvendelige komponent, hvor tilbageholdelseselementet ikke kan indgribe tilbageholdelsesrillen

når opretningselementet ikke passer med opretningsføringen.

5. Det aftagelige element ifølge krav 1, hvor legemet yderligere omfatter en lyssensor og en lysemitterende kilde, hvor lyssensoren og den lysemitterende kilde er i elektrisk forbindelse med den elektriske kontaktor.

6. Det aftagelige element ifølge krav 1, hvor den lysemitterende kilde omfatter dobbeltemittere konfigureret til at emittere 660 nm og 880 nm lys.

7. Det aftagelige element ifølge krav 1, hvor legemet yderligere omfatter et isolerende dækningslag anbragt over sensoren.

8. Det aftagelige element ifølge krav 1, hvor de to elektroder består af en central elektrode og en toroid elektrode, hvor den centrale elektrode og toroide elektrode har en koncentrisk orientering.

9. Det aftagelige element ifølge krav 8, hvor de to elektroder er adskilt af en spalte på omkring 2,921 mm (0,0115 tommer).

10. Det aftagelige element ifølge krav 8, hvor den centrale elektrode har en diameter på omkring 4,318 mm (0,17 tommer).

11. Det aftagelige element ifølge krav 8, hvor den toroide elektrode har en indvendig diameter på omkring 10,16 mm (0,4 tommer) og en udvendig diameter på omkring 12,7 mm (0,5 tommer).

12. Det aftagelige element ifølge krav 8, yderligere omfattende en grundflade, hvor afstanden mellem de to elektroder og grundfladen er omkring 0,4064 mm (0,016 tommer).

13. Det aftagelige element ifølge krav 12, hvor grundfladen har en diameter på omkring 12,7 mm (0,5 tommer).

DRAWINGS

Drawing

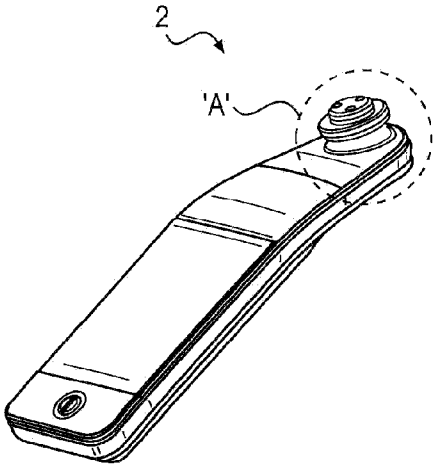

FIG. 1A

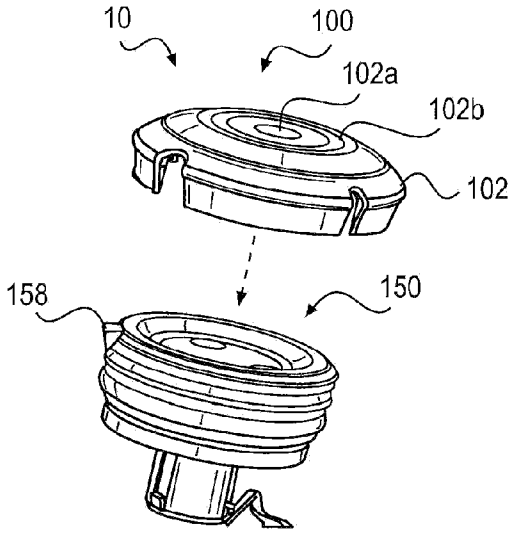

FIG. 1B

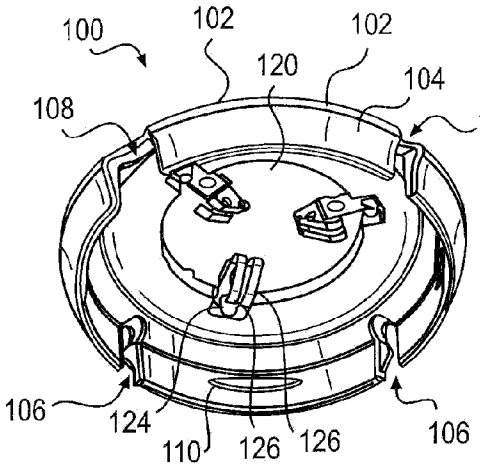

FIG. 2

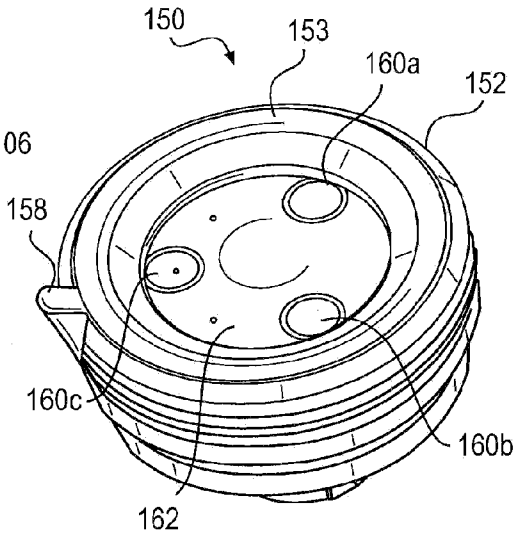

FIG. 3

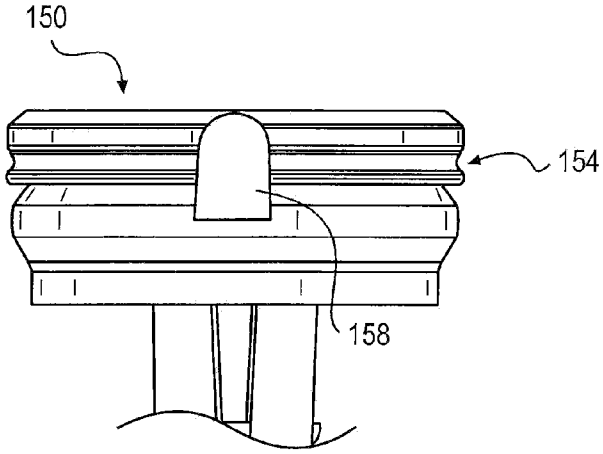

FIG. 4

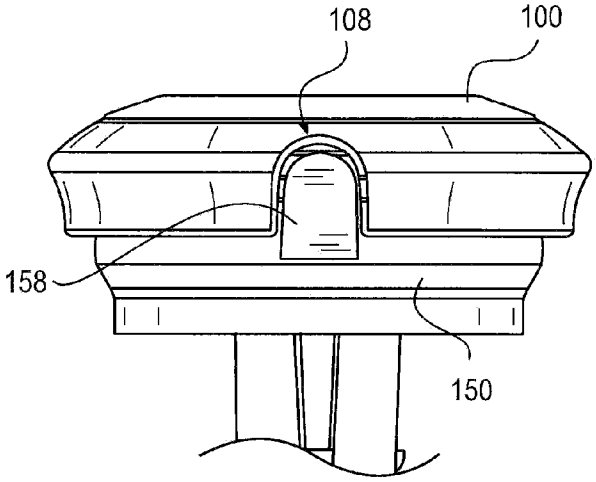

FIG. 5

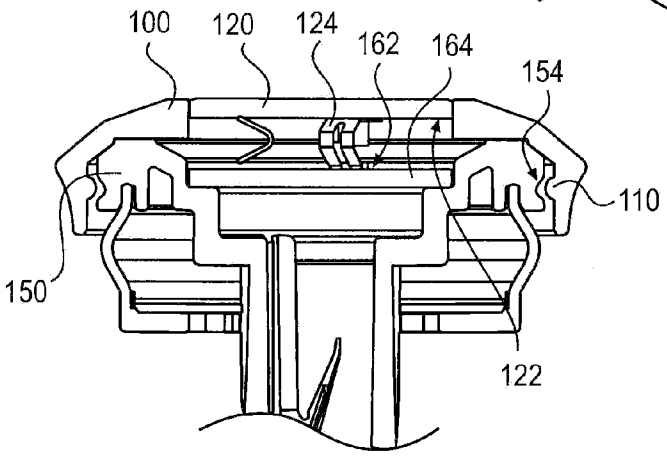

FIG. 6

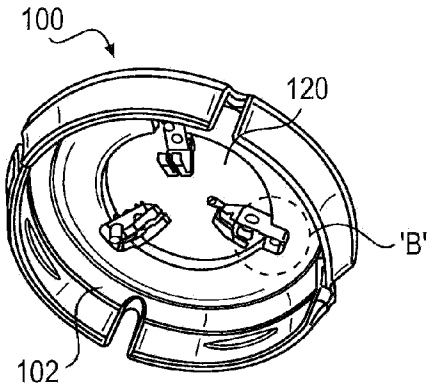
100
120
'B'
102

FIG. 7A

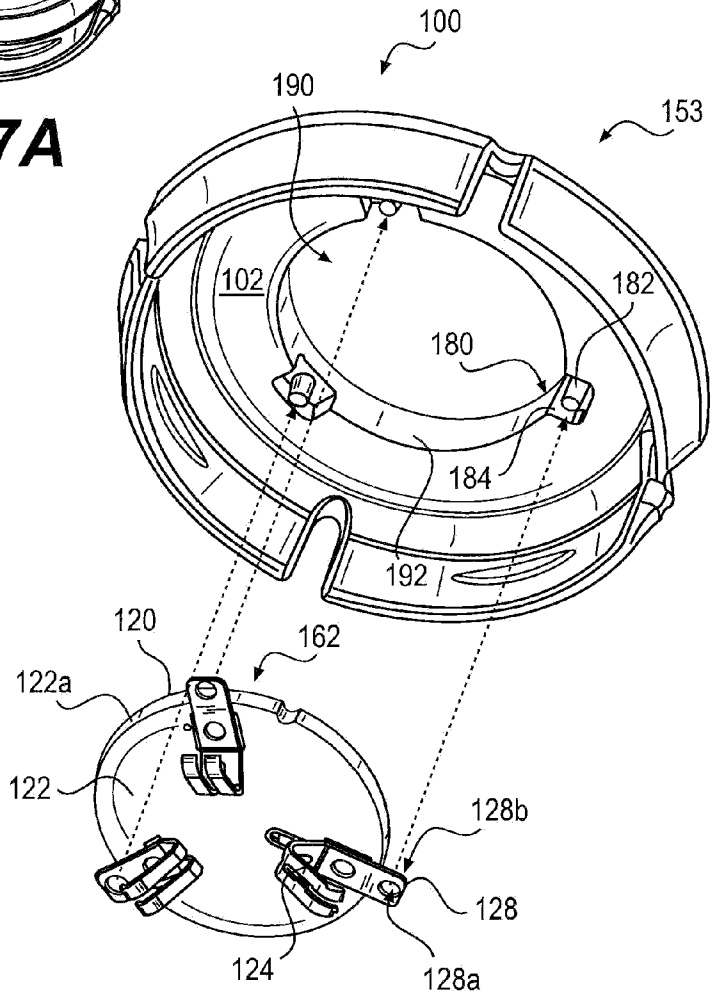
100
190
153
102
182
180
184
192
120
162
122a
122
128b
128
124
128a

FIG. 7B

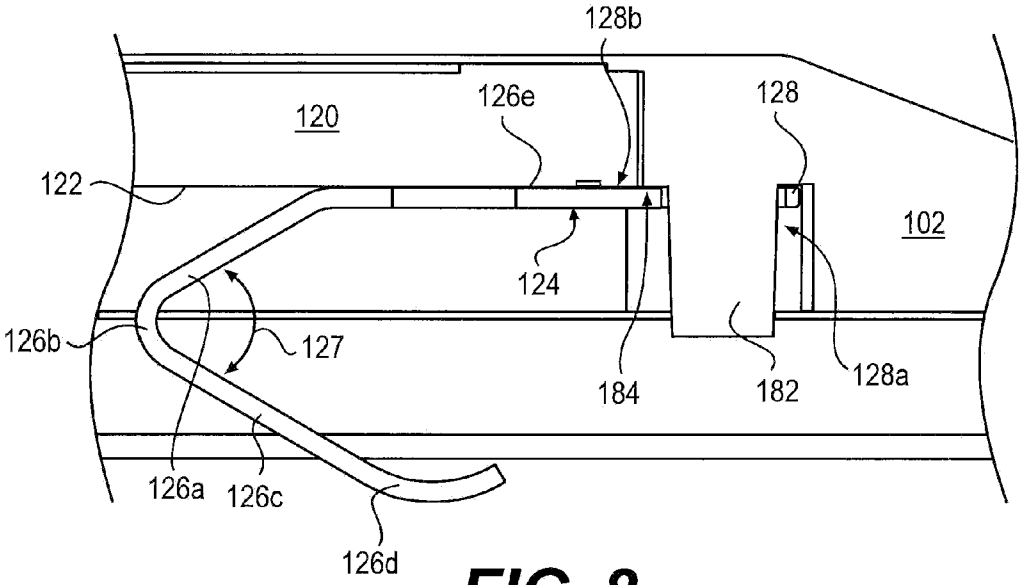
128b
120
126e
128
122
102
124
126b
127
184
182
128a
126a
126c
126d

FIG. 8

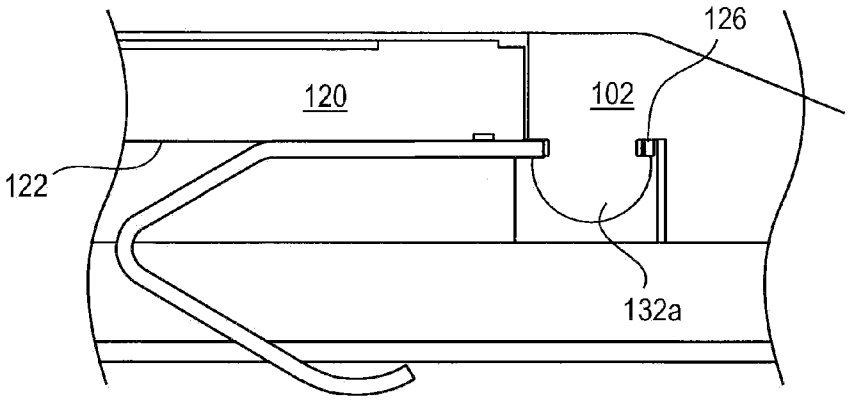
126
120
102
122
132a

FIG. 9

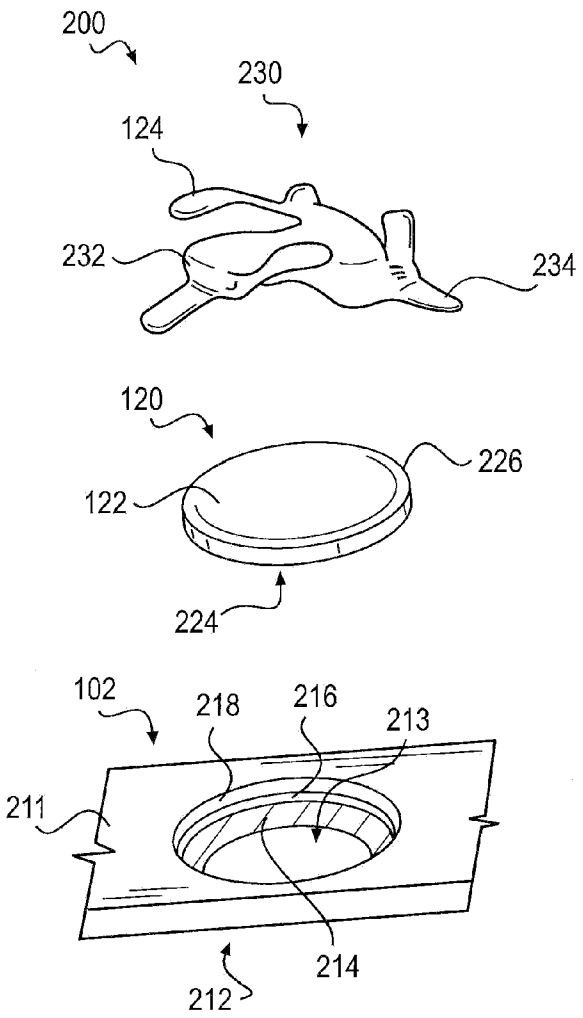

FIG. 10

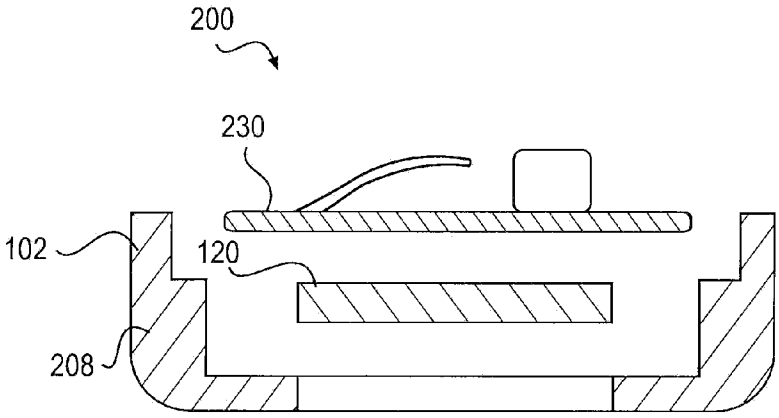

FIG. 11A

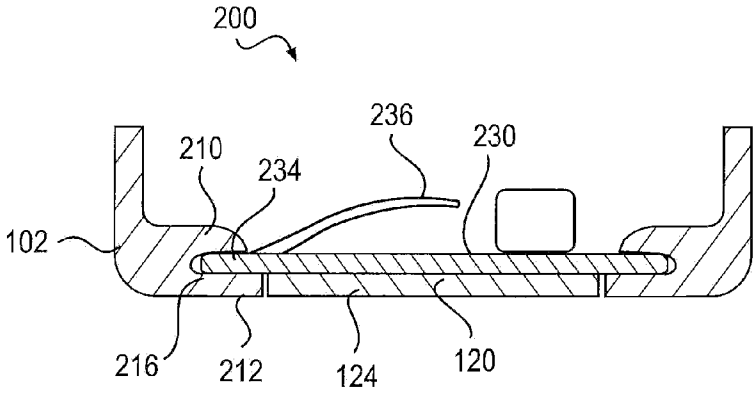

FIG. 11B

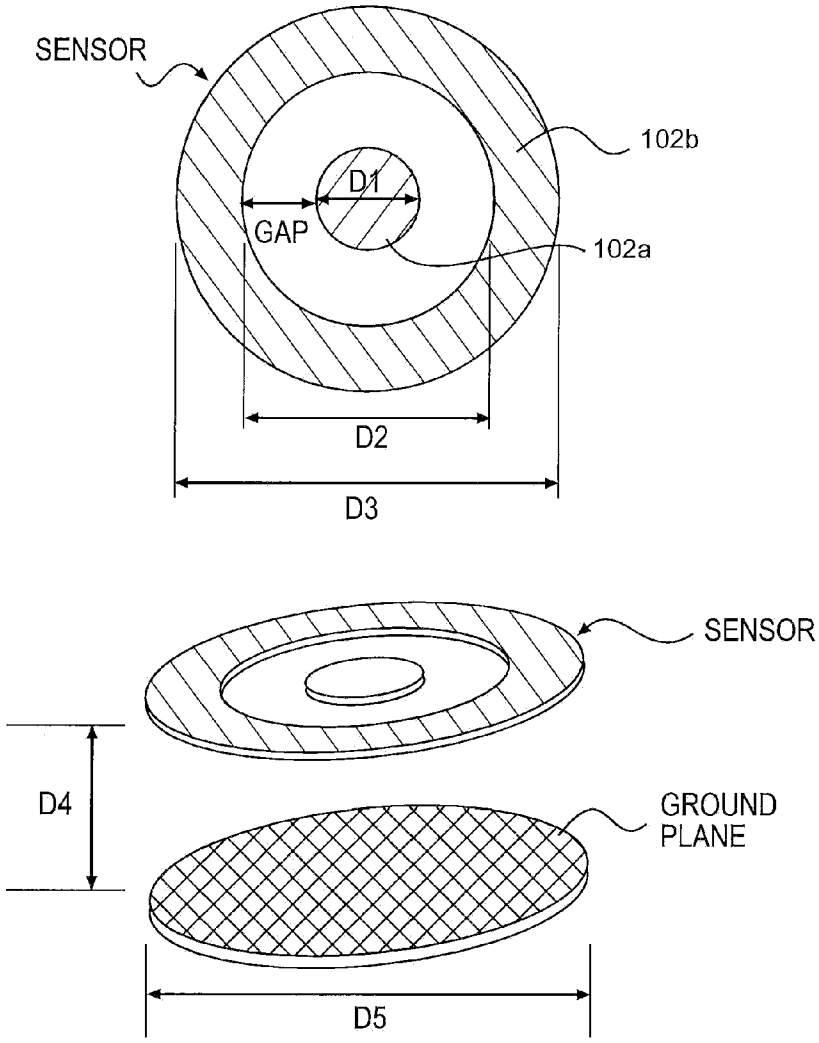

FIG. 12

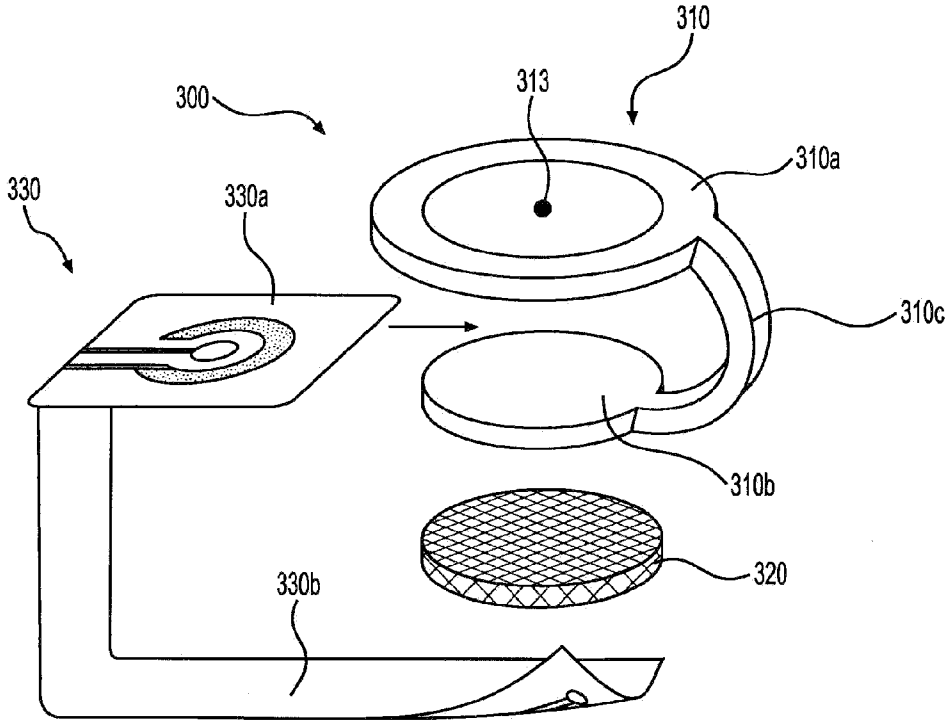

FIG. 13A

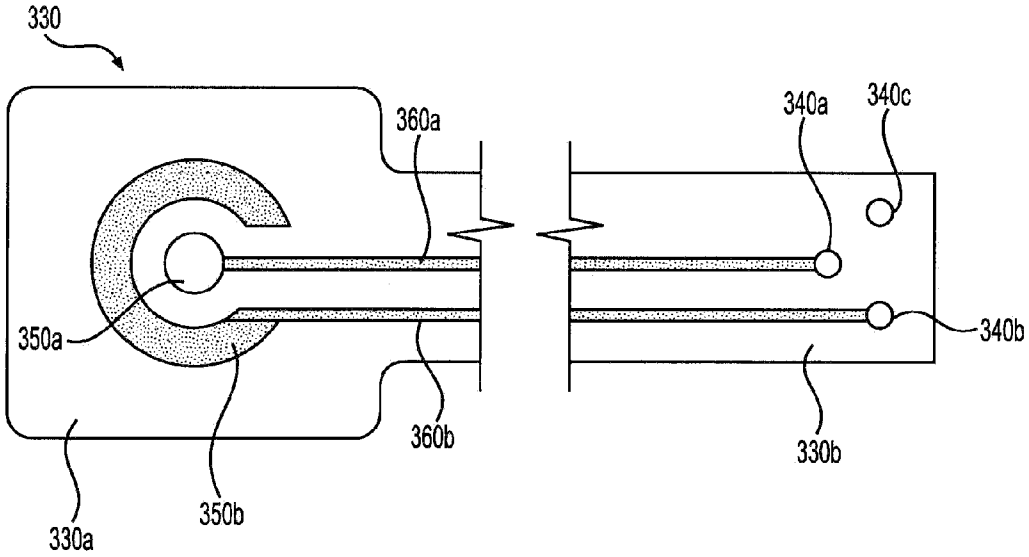

FIG. 13B