March 19, 1929. W. H. GILBERT 1,705,859

VENDING MACHINE

Filed Feb. 24, 1925 7 Sheets-Sheet 1

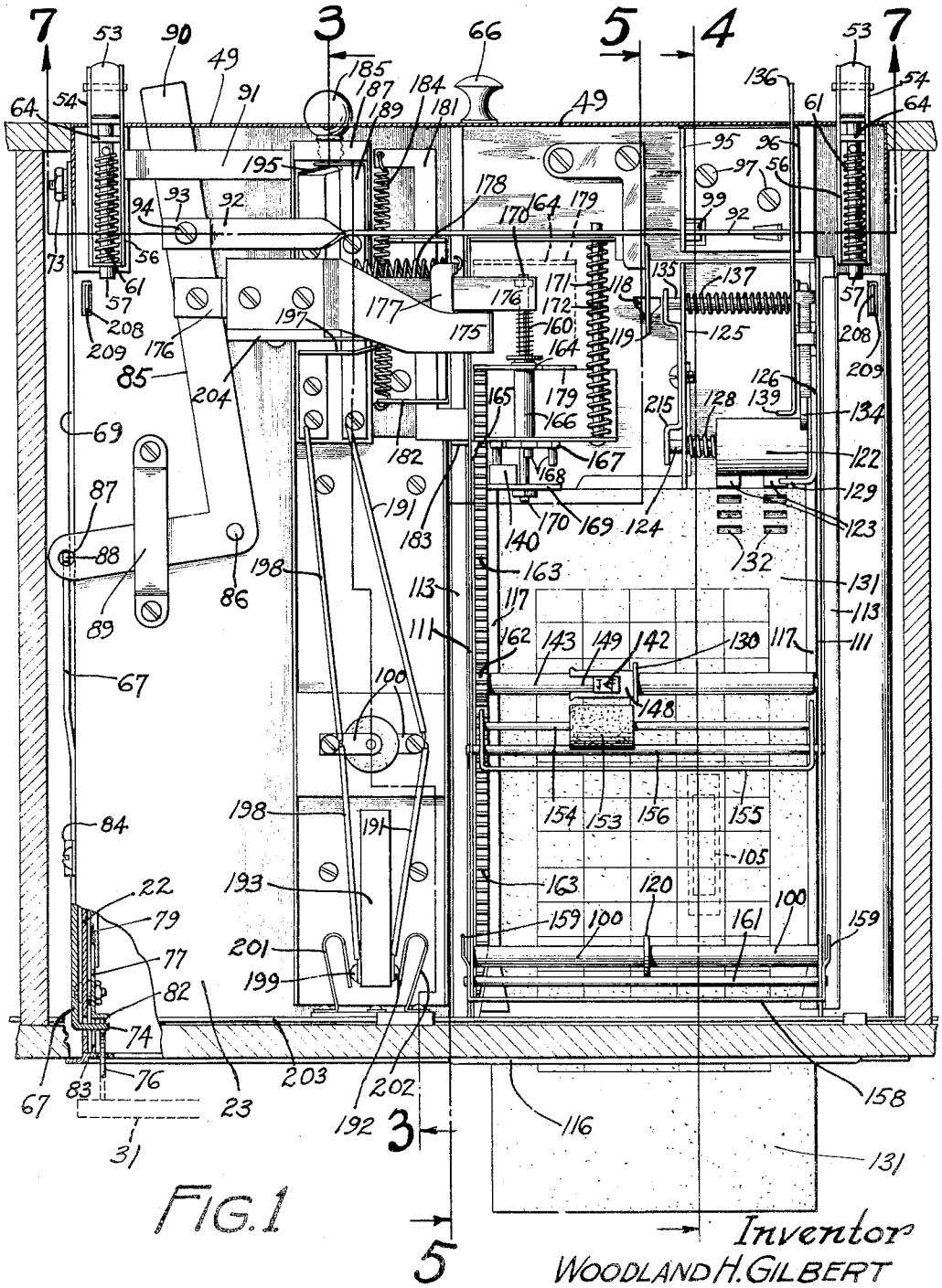

FIG. 1

Inventor
WOODLAND H. GILBERT
By Paul, Paul & Moore
ATTORNEYS

March 19, 1929. W. H. GILBERT 1,705,859

VENDING MACHINE

Filed Feb. 24, 1925 7 Sheets-Sheet 2

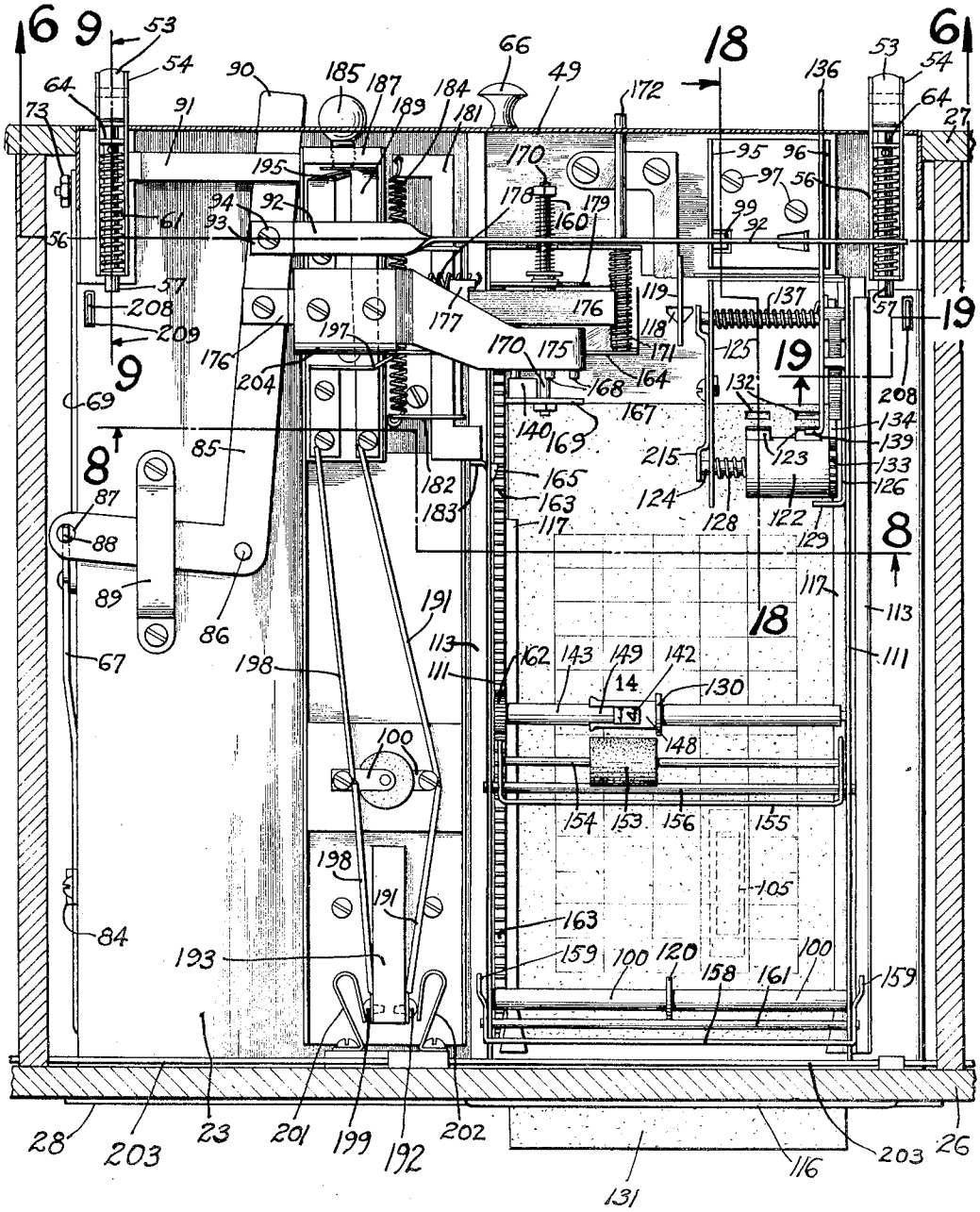

FIG. 2

Inventor
WOODLAND H. GILBERT

By Paul, Paul & Woodcock
ATTORNEYS

March 19, 1929. W. H. GILBERT 1,705,859

VENDING MACHINE

Filed Feb. 24, 1925 7 Sheets-Sheet 3

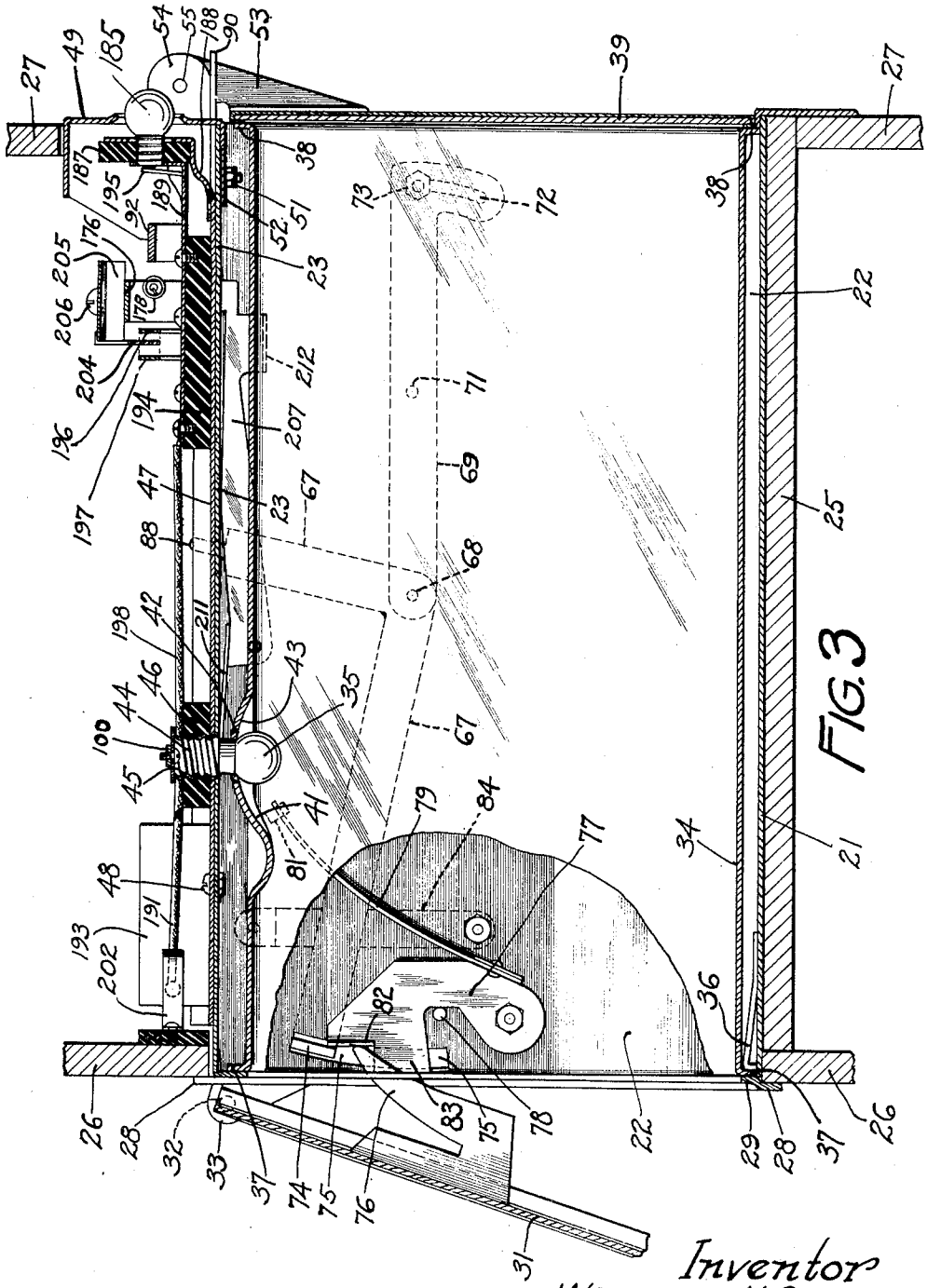

FIG. 3

Inventor
WOODLAND H. GILBERT
By Paul, Paul & Moore
ATTORNEYS

March 19, 1929. W. H. GILBERT 1,705,859

VENDING MACHINE

Filed Feb. 24, 1925 7 Sheets-Sheet 4

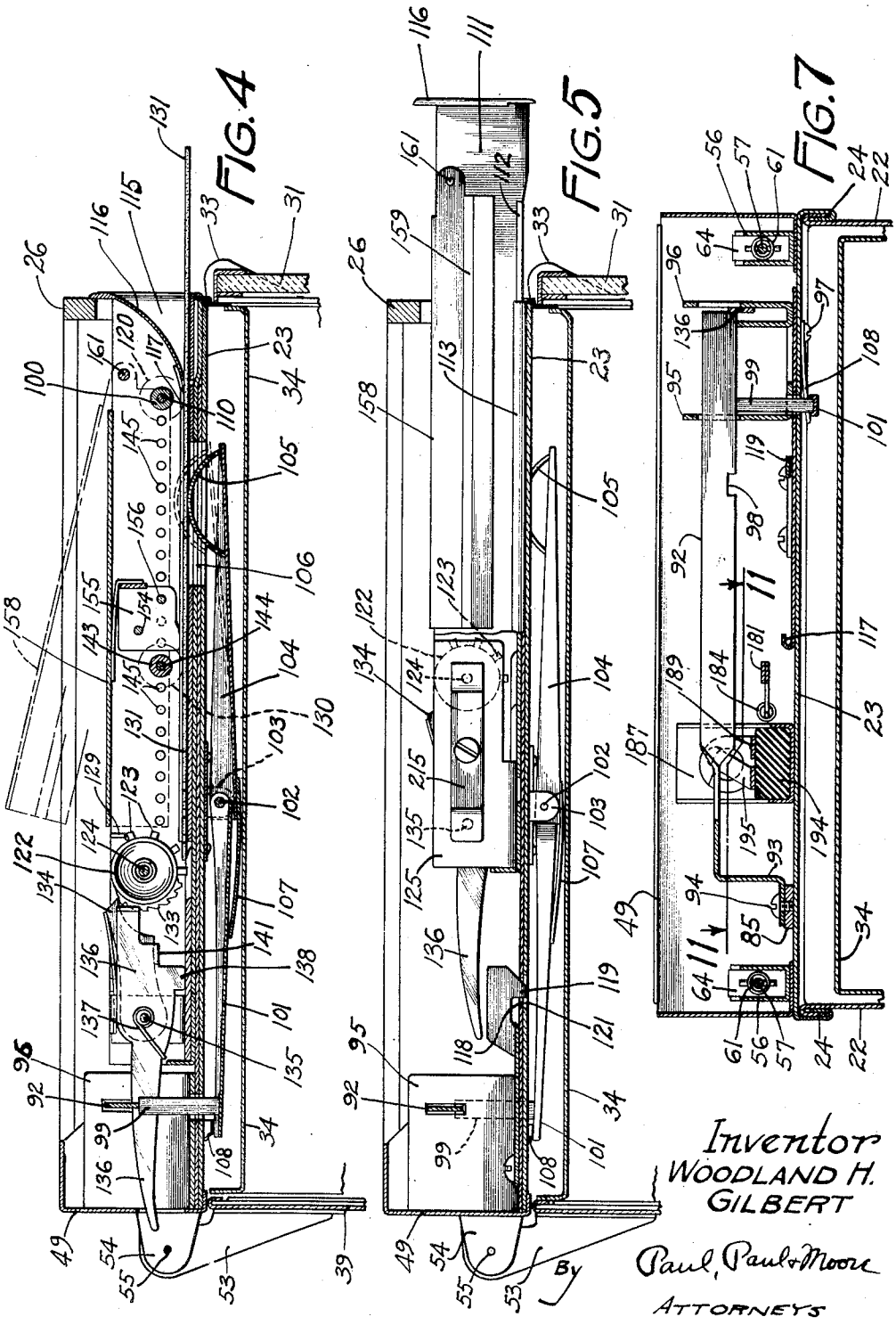

Inventor
WOODLAND H. GILBERT
By Paul, Paul & Moore
ATTORNEYS

March 19, 1929. W. H. GILBERT 1,705,859

VENDING MACHINE

Filed Feb. 24, 1925 7 Sheets-Sheet 5

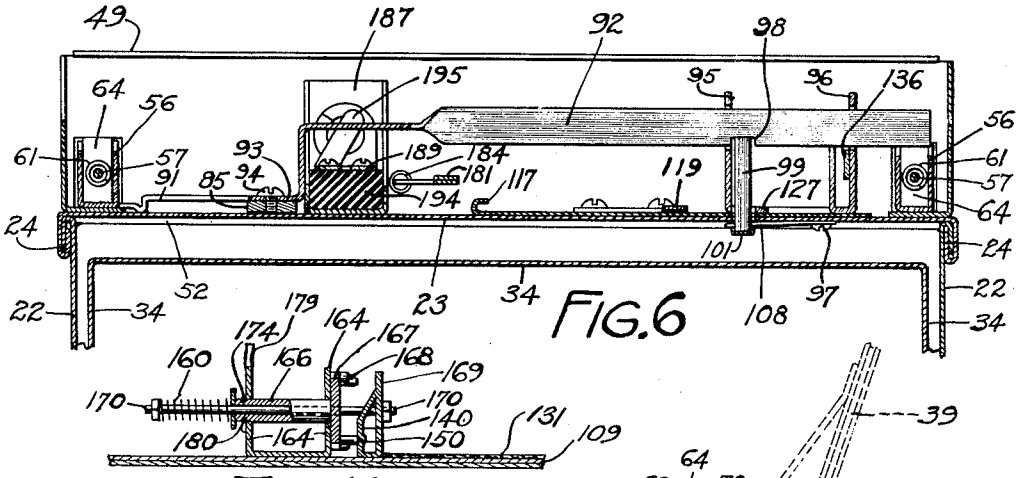

FIG. 6

FIG. 10

FIG. 9

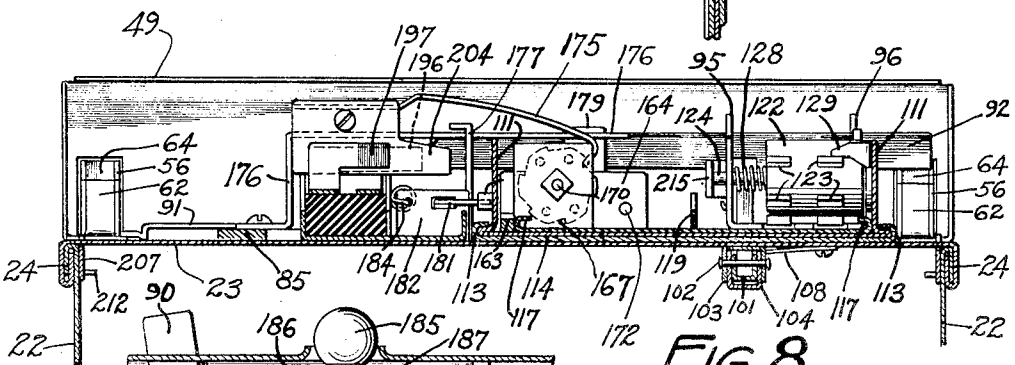

FIG. 8

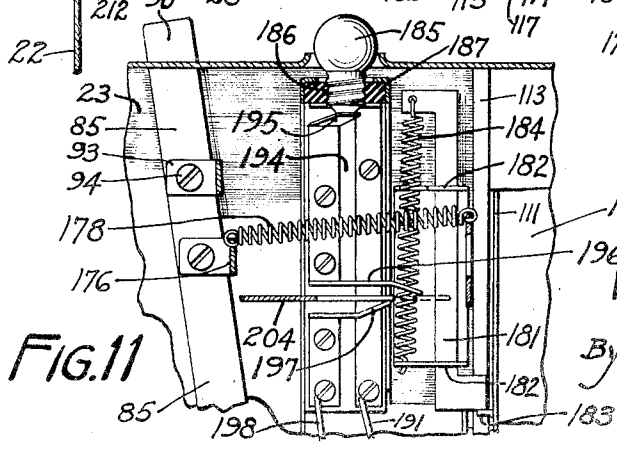

FIG. 11

Inventor
WOODLAND H. GILBERT
By Paul, Paul & Moore
ATTORNEYS

March 19, 1929. W. H. GILBERT 1,705,859

VENDING MACHINE

Filed Feb. 24, 1925 7 Sheets-Sheet 6

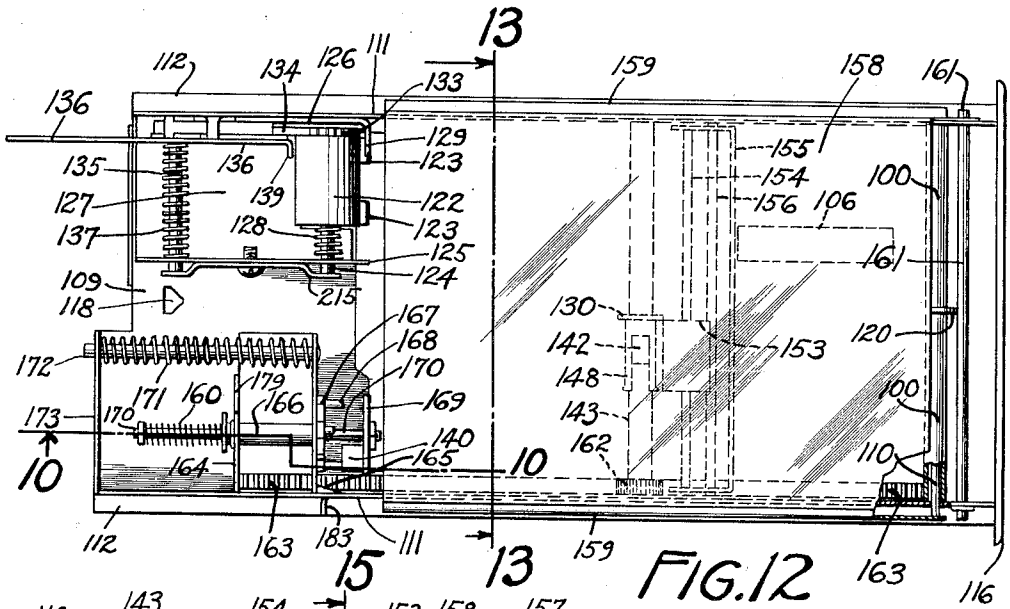

FIG. 12

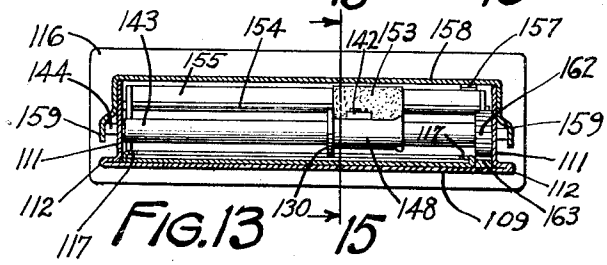

FIG. 13

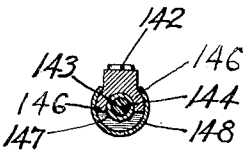

FIG. 16

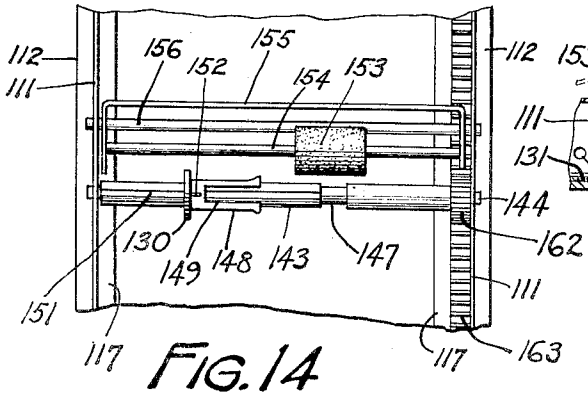

FIG. 14

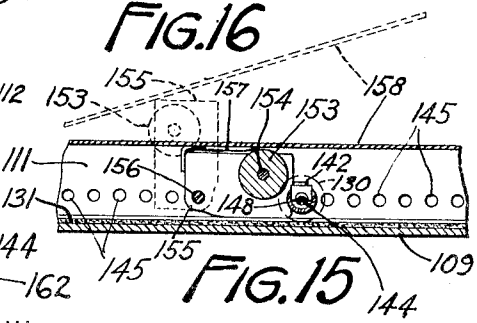

FIG. 15

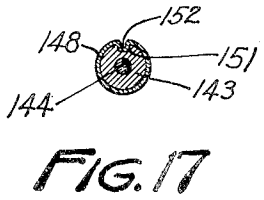

FIG. 17

Inventor
WOODLAND H. GILBERT
By Paul, Paulo & Moore
ATTORNEYS

March 19, 1929. W. H. GILBERT 1,705,859

VENDING MACHINE

Filed Feb. 24, 1925 7 Sheets-Sheet 7

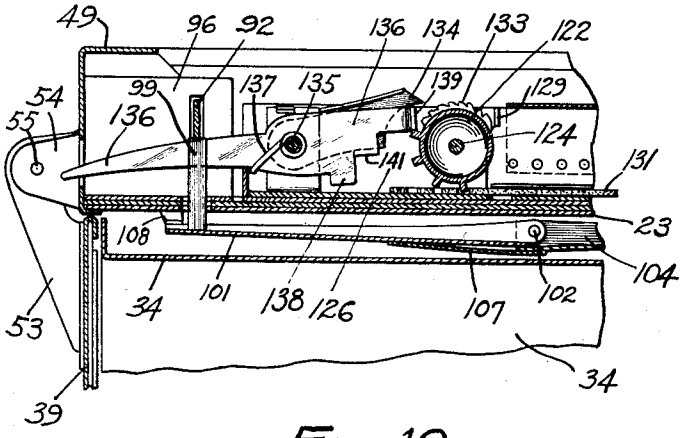

FIG. 18

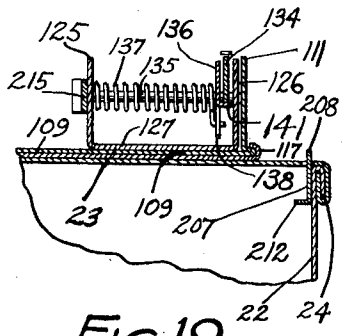

FIG. 19

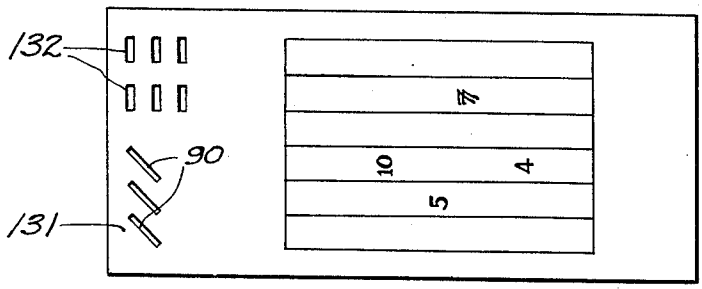

FIG. 20

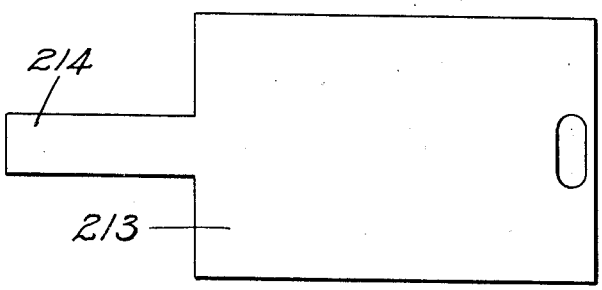

FIG. 21

Inventor
WOODLAND H. GILBERT
By Paul, Paul & Moore
ATTORNEYS

Patented Mar. 19, 1929. 1,705,859

UNITED STATES PATENT OFFICE.

WOODLAND H. GILBERT, OF ST. PAUL, MINNESOTA.

VENDING MACHINE.

Application filed February 24, 1925. Serial No. 11,287.

This invention relates to new and useful improvements in vending machines particularly designed to normally maintain a commodity within a locked container and are adapted to be unlocked by a purchaser without the necessary intervention or attendance of the seller, and more particularly is an improvement over the form of vending machine shown in my prior Patent No. 1,461,613 issued July 23, 1923.

The particular object of the invention is to provide such a vending machine combining novel constructional features which will render it fool-proof and efficient in operation and whereby it will require a minimum amount of attention on the part of the attendant.

The object of the invention therefore is to provide an improved vending machine.

Other objects of the invention will be pointed out in the following description and the accompanying drawings and will be pointed out in the annexed claims.

In the drawings there has been disclosed a structure designed to carry out the various objects of the invention but it is to be understood that the invention is not confined to the exact features shown, as various changes may be made within the scope of the claims which follow.

In the drawings:

Figure 1 is a plan view of one of the vending units showing the device in locked closed position and with a key member partially inserted and in position to unlock the device upon further inward movement thereof;

Figure 2 is a similar view showing the key member thrust into the device to the limit of its movement, thereby unlocking the device and simultaneously causing the charge to be automatically marked thereon;

Figure 3 is a vertical sectional view on the line 3—3 of Figure 1 showing the means provided for illuminating the closure and the signal light provided at the rear of the device, and also showing the door at the front of the structure in unlocked open position;

Figure 4 is a partial vertical sectional view on the line 4—4 of Figure 1 with the parts positioned as shown in Figure 1;

Figure 5 is a similar view on the line 5—5 of Figure 1;

Figure 6 is a partial transverse sectional view on the line 6—6 of Figure 2, showing the means provided for retaining the mechanism in unlocked open position;

Figure 7 is a similar view on the line 7—7 of Figure 1, showing the parts in door-locking position;

Figure 8 is a partial transverse sectional view on the line 8—8 of Figure 2, showing the means provided for indicating a repeated operation of the same vending unit by the same key member;

Figure 9 is a detailed sectional view on the line 9—9 of Figure 2 showing the construction of the hinges supporting the rear door of the device;

Figure 10 is a sectional view on the line 10—10 of Figure 12 showing the means provided to retain in its adjusted positions, the mechanism employed to prevent the type from printing on the same place on the card, the purchase price of an article sold, should the purchaser attempt to actuate the same container more than once with the same card;

Figure 11 is a fragmentary detailed view showing the simple switch mechanism provided for opening and closing the circuit to the signal light at the rear of the machine, the switch being shown in circuit-opening position;

Figure 12 is a plan view of the key card or ticket holder removed from the machine;

Figure 13 is a cross-sectional view on the line 13—13 of Figure 12;

Figure 14 is a partial plan view of Figure 12 showing the preferred method of mounting the type and inking roll therefor, and also showing the means for actuating the same;

Figure 15 is a detailed sectional view on the line 15—15 of Figure 13 showing the type and inking roll in normal inoperative position;

Figure 16 is an enlarged detailed sectional view of the type mounted on its supporting shaft;

Figure 17 is a similar view showing the means provided for locking the slidable type-holding sleeve against relative rotation on the type-supporting shaft;

Figure 18 is a sectional view on the line 18—18 of Figure 2 showing the parts in door-unlocking position;

Figure 19 is a sectional view on the line 19—19 of Figure 2;

Figure 20 is a view showing the form of key card or ticket employed to release the

doors of the apparatus and upon which the amount of each charge is printed or marked by the type; and

Figure 21 is a view showing the preferred form of master key employed to unlock the card holder when it is desired to remove the holder from the machine to readjust the type and inking roll thereof to conform to the purchase price of the article to be vended.

The general construction of the vending machine featured in this invention and shown in the accompanying drawings, is somewhat similar to the construction of the machine shown in the above-mentioned patent with the exception that several improvements and refinements have been added which tend to make a more practical and fool-proof device.

The apparatus here shown preferably comprises a metallic container having a bottom wall 21 and the opposed side walls 22. The upper wall 23 of the casing is slidably mounted on the side walls 22 by means of guides 24 provided on each side of the slide 23 and the walls 22, as shown in Figures 6 and 8. The guides 24 are preferably formed by bending and folding the marginal edges of the slide 23 and the walls 22 as shown. By thus slidably mounting the upper wall 23 on the side walls of the container the upper wall, upon which the operating mechanism is mounted, may be removed from the container for adjustment of the various parts and for repairs, when necessary.

In general practice a plurality of these containers are arranged on suitable shelves 25 adjacent one another, and between the front and rear panels 26 and 27 as indicated in Figure 3. The arrangement and mounting of the containers, therefore, is similar to that shown and described in my prior patent above mentioned.

A frame 28 is provided at the front end of the container and this frame provides a seat 29 for a glass door 31, which is hinged to the upper portion of the frame 28 by means of pins 32 secured to the door and pivotally mounted in lugs 33 secured to the frame 28. The frame 28 also functions to conceal the edges of the container walls 22 and bottom 21 and to provide a stop for a lining 34 which is removably mounted within the container (see Figure 3). This lining is preferably formed of sheet metal and is finished in white enamel so as to present a neat and sanitary appearance and also to reflect the rays of light from an electric light bulb 35 arranged in the upper wall thereof. The lining is retained within the container by means of a detent 36 secured to the bottom wall 21 and which is adapted to be engaged by the outwardly turned circumferential flange 37, provided at the front end of the lining. (See Figure 3.) The rear end of the lining is provided with a similar flange 38, which functions to strengthen the lining and also to provide a seat for a rear door 39, which provides a closure for the rear end of the container.

By reference to Figure 3 is will be seen that the over-all height of the lining 34, measuring from top to bottom of the flange 37, is substantially less than the inside height of the container, so that the front end portion of the lining may be lifted or raised with relation to the container walls 21 and 22. The amount of such lifting of the lining is sufficient to allow the lower flange 37 to slide over the detent 36, when it engages the inclined face thereof, after which the flange will engage the vertical wall of the detent to lock the line in place within the container, as shown in Figure 3. The lining may readily be removed from the rear end of the container by lifting the flange out of engagement with the detent, and after the light bulb 35 has been removed from its socket.

Means are preferably provided in the construction of the lining 34 to prevent the light rays from the bulb 35 to be outwardly directed through the glass door 31 at the front end of the container, and into the eyes of the purchaser. Such means preferably consist in shaping a portion of the upper wall of the lining to provide a visor or deflector 41, which functions to direct the rays of light downwardly and rearwardly into the container.

This visor or deflector may be conveniently formed by bending the metal as shown in Figure 3. An aperture 42 is provided in the concaved portions 43 of the lining wall, through which the threaded plug 44 of the light bulb may be inserted to be received in its complementary socket 45 which is mounted in a suitable insulating block 46 secured to a flanged plate 47, which is suitably secured to the upper wall 23 of the container by means of screws 48. Suitable apertures are provided in the wall 23 and plate 47 to provide clearance for the socket 45, it being understood that the latter is suitably spaced from the plate 47 and wall 23 in order to prevent the latter from coming into electrical contact with the socket.

A finishing plate 49, preferably U-shaped in cross section, is secured to the rear edge of the upper wall 23 of the container by means of suitable screws 51 passing through the lower flange 52 thereof and the wall 23, as shown in Figure 3. This finishing plate provides a means for closing the gap between the wall 23 and the lower edge of the panel 27, which gap must be sufficiently wide to permit the removal of the wall or slide 23 and the operating mechanism mounted thereon when it is removed from the container.

The means provided for supporting the

rear door 39 preferably consists of a suitable hinged mechanism so constructed as to yieldably retain the door in closed position and also to yieldably retain such door in open position, when opened substantially to a horizontal position. Such means preferably consists in providing a lug 53 on each side of the door 39 adjacent the upper corners thereof, which lugs are adapted to be received between a pair of ears 54 (shown in Figures 1, 2 and 3) which outwardly project through an opening in the plate 49. The ears 54 and lugs 53 are apertured to receive the pivot pins 55, which form the hinges of the door 39. As shown in Figure 9, the lugs 53 may be formed of sheet metal in order to eliminate weight as much as possible, it being understood of course, that, if desired, they may be made of solid material suitably secured to the door 39.

The means provided for yieldably retaining the door in its closed and open positions preferably consists in the provision of a pair of box-like brackets 56 each having a plunger 57 slidably mounted therein. Each plunger is provided with a head 58 adapted to engage the lugs 53, as shown in Figure 9. A coiled compression spring 61 is mounted on each plunger 57 and has one end bearing against the rear wall 62 of the bracket and the other end thereof bearing against a pin 63 secured to the plunger, so that the plunger is normally yieldably held against the lugs. A wall 64 is provided in each bracket 56 to provide bearings for the ends of the plungers adjacent the lugs 53. Thus it will be seen that when the door 39 is opened the corners 59 of the lugs 53 will engage the plunger heads 58 which will cause the plungers to be axially moved in their bearings against the compression of the springs 61. When the door has reached substantially a horizontal position, the upper flattened surfaces of the lugs 53 will be brought into contact with the plunger heads 58, which will thereby cause the plungers to retain the doors in such position, caused by the distance from the axes of the pivot pins 55 to the extreme points of the corners 59, being greater than the distance from the axes of the pins to the flattened upper surfaces of the lugs 53. The brackets 56 may be conveniently secured to the upper wall 23 of the container by means of screws 65. A hand grip or knob 66 is preferably provided on the rear door 39 whereby the attendant may conveniently open and close the door when placing a new article within the container.

The front door 31 of the container is provided with a novel locking mechanism whereby the door will be automatically locked in closed position when the vending mechanism, mounted on the upper wall or slide 23 of the container, is set or moved into locking position by the attendant after an article has been placed within the container. Such means preferably consists in the provision of a bell crank 67 which is pivotally mounted upon a pin 68 secured to one end of an adjustable arm 69. The arm 69 is pivotally mounted on one of the side walls 22 of the container by means of a screw or pivot pin 71. (See Fig. 3.) An arcuate slot 72 is provided in the opposite end of the arm 69 adapted to receive a screw 73 which is also mounted in the wall 22 of the container, and functions as a means for locking the arm 69 in its adjusted position. The arm 69 is made adjustable so that the pivot pin 68 may be lowered to move the upper end of the arm 67 out of connection with the operating mechanism, carried by the demountable upper wall of the casing so that the wall may readily be removed therefrom. The relatively longer arm of the bell crank 67 preferably has its outer end inwardly bent to form a projection 74, which inwardly projects through an elongated aperture 75 provided in the wall 22 of the container casing, as shown in the lower left hand corner of Figure 1. This lug is adapted to engage a curved hook 76 secured to one side of the door 31, (see Figure 3).

A latch 77 is pivotally mounted on the casing wall 22, on the inner side thereof and adjacent the lining 34. This latch is yieldably held in normal position against a stop pin 78 by means of a leaf spring 79, having one end secured thereto and the other end supported by means of a guide 81 provided in the upper portion of the casing wall. A detent 82 is formed on the latch 77 adapted to engage the upper portion of the curved hook 76 when the door 31 is in closed or locked position. A stop lug 83 is also provided in the latch 77 adapted to provide a stop for the projection 74 of the bell crank 67, when the door is in open position as shown in Figure 3.

When the door is in open position the stop lug 83 on the latch 77 will be moved into the path of the lug 74 on the bell crank 67 by the action of the spring 79. When thus positioned, and the door 31 is in wide open position so that the curved hook 76 will be out of contact with the detent 82, it will be impossible for the attendant to move the bell crank 67 into door-locking position as a result of the projection 74 engaging the stop lug 83, on the latch 77.

As soon, however, as the purchaser releases the door 31, it will assume the position shown in Figure 3, in which position the lug 74 and the bell crank 67 will engage the curved or cam face of the hook 76, thereby causing it and the door to be inwardly moved as the bell crank is downwardly moved into door locking position by the attendant. Such movement of the

bell crank and the door 31 will cause the latch 77 to be inwardly moved by the hook 76 engaging the detent 82 thereof. Such inward movement of the latch will cause the stop lug 83 to be moved out of the path of the projection 74 of the bell crank, thereby permitting it to be moved to the bottom of its stroke or into door-locking position. As soon as the door-releasing mechanism has been actuated by the insertion of a key-member into the device, by the purchaser, and which will be hereinafter described, the bell crank will be upwardly moved to the position shown in Figure 3. Such movement of the bell crank will allow the latch to be outwardly moved against the stop pin 78 by the action of the spring 79, thereby causing the detent 82 to engage the hook 76 and thus partially open the door as shown in Figure 3. A guide member 84 is preferably secured to the casing wall to retain the bell crank 67 in close proximity to the outer surface of the wall.

The means provided for actuating the bell crank 67 consists of an L-shaped lever 85, which is pivotally mounted on a pin 86 secured to the upper wall 23 of the container casing. One arm of this lever is arranged to overhang the upper corner of the container and is provided with an aperture 87 adapted to receive the terminal 88 of the upright arm of the bell crank 67, as shown in Figures 1 and 2. A guide bar 89 is also secured to the slide 23 to retain the L-shaped lever against the wall 23. The other end of the lever 85 outwardly projects through an elongated opening (not shown) provided in the U-shaped finishing plate 49, so as to provide a hand grip 90 whereby the attendant may conveniently actuate the lever in moving the vending mechanism into door-locking or vending position. A guide bar 91 is also provided adjacent the grip 90 to guide the lever 85. A locking bar 92 has an off-set end portion 93 which is pivotally connected to the L-shaped lever 85 by means of a suitable screw or pin 94. The opposite end of this locking bar is slidably mounted in upright guides 95 and 96, preferably formed of a single piece of sheet metal which has its lower horizontal portion suitably secured to the container casing by screws 97, as shown in Figures 1, 2, 6 and 7. The lever 69 is also adjustably mounted to facilitate assembling the bell crank 67 and the L-shaped lever 85. The terminal 88 may be out of and into engagement with the aperture 87 by moving the slotted end of the arm 69 upwardly.

A notch 98 is provided in the lower edge of the locking bar 92 adapted to receive the upper end of a vertically movable post 99, which has its lower end secured to one end of a pivotally mounted arm 101, as particularly shown in Figures 4 and 5. The arm 101 is pivotally mounted on a pin 102 carried by a forked bracket 103 secured to the under side of the slide 23. A similar arm 104 is also mounted on the pin 102 and oppositely extends therefrom towards the front end of the container as shown in Figures 4 and 5. An arched key-engaging member 105 is secured to the arm 104 and this member is adapted normally to be upwardly projected through an elongated opening 106 provided in the slide 23 and the adjacent parts and into the path of the key-member to be engaged thereby when the latter is thrust into the key-holder, as will hereinafter be described.

A flat spring 107 has one end secured to the arm 104 and its flexible end adapted to bear against the under side of the arm 101 in such a manner that when the arm 104 is downwardly moved or oscillated by the action of the key member contacting with the arched member 105, the arm 101 will be yieldably upwardly moved to bring the post 99 into contact with the lower edge of the locking bar 92. Therefore, it will readily be seen that as soon as the locking bar is released or moved from the position shown in Figure 7 to that shown in Figure 6 the post 99 will be upwardly moved into the notch 98 provided in the lower edge of the bar, thereby preventing the locking bar 92, and therefore the L-shaped lever 85 and the bell crank 67 from again being moved into door-locking position until after the key-card or member has been withdrawn from the key holder, which action will permit the arched member 105 to be upwardly moved into the elongated opening 106 and therefore the post 99 to be downwardly moved out of engagement with the notch 98 in the locking bar 92. Tension means are preferably provided to downwardly move the arm 101 when the key-card has been removed from the card holder thereby to move the post 99 out of engagement with the notch 98 in the locking bar. Such downward movement of the arm 101 may be accomplished either by gravity or by the use of a small spring arranged to engage and to exert a slight downward pressure upon the arm. The means shown in the drawings preferably consists in the provision of a small flat spring 108 which may be secured to the under side of the slide 23 in position to engage the end of the arm 101 as shown in Figure 4. The spring 108 may be secured to the slide 23 by means of one of the screws 97. (See Figures 6, 7 and 8.)

It is to be understood, however, that the spring 108 is relatively weaker in strength than the spring 107 so that when the arm 104 is downwardly forced by the insertion of a card the arm 101 will be upwardly moved against the tension of the spring 108. Thus by means of the spring 107 it will

readily be seen that a card may be inserted into the card holder regardless of whether the post 99 is in registration with the notch 98 or not, and after a card has been inserted therein the post 99 will automatically be moved into locking engagement with the bar 92 as soon as the latter has been moved sufficiently to bring the notch 98 into alignment therewith. Means are provided on the upper portion of the container which constantly tend to move the operating lever 85 from the door-locking position shown in Figure 1 to the door releasing position shown in Figure 2. Such means will be subsequently described.

The detaining means for the operating lever is a mechanism which is operated by an instrumentality in the hands of the purchaser. The instrumentality or key member employed to actuate the door-releasing mechanism preferably is a flat member or card such as shown in Figure 20. The means provided to receive this key member is in the form of a slide which preferably is demountably mounted in guides provided on the upper wall 23 of the container. The key holder or slide is preferably constructed of sheet metal and comprises a bottom or base 109 and the opposed side walls 111 having oppositely projecting tongues 112 formed therein which are adapted to be received in longitudinal guideways 113 provided on the top wall 23 of the container, as shown in Figure 8. These guideways are preferably formed by upwardly and inwardly bending the opposite edges of a plate 114 which is suitably secured to the top wall 23 of the container. The forward end of the card holder or slide is provided with an enlarged mouth 115, preferably formed by a curved plate 116 and which mouth projects through the front panel 26 as shown in Figures 4 and 5. The rear portion of the curved plate 116 is downwardly flared to provide a relatively narrow elongated opening of sufficient size to permit the insertion of the key member or card therein and to guide it into the guides 117 secured to the plate 114 of the card slide. An aperture 118 is provided in the rear portion of the plate 114 adapted to receive a hook 119 which is yieldably mounted upon the rear portion of the plate 114. An aperture 121 is also preferably provided in the wall 23 to provide clearance for the end of the hook 119 when in the position shown in Figures 1, 2 and 5. By thus mounting the card holder or slide, it may readily and conveniently be removed from the container for adjustment of its parts by simply raising the hook 119 out of engagement with the aperture 118.

Means are provided in the key slide to prevent the purchaser from using a card or key member to unlock the door-operating mechanism which is not intended or designed for the purpose. Such means preferably consists in mounting a cylinder 122, having a plurality of spaced teeth 123, adjacent the rear end-portion of the slide as shown in Figures 1, 2, 4, 12 and 18. The cylinder 122 is mounted upon a shaft 124 which is mounted in the opposed walls 125 and 126 of a U-shaped member 127 which is suitably secured to the base plate 109 of the card holder. A torsion spring 128 is coiled about the shaft 124 and functions normally to hold the cylinder in the position shown in Figures 1 and 4. When the cylinder is thus positioned it will be seen that one of the teeth 123 will be in engagement with a stop lug 129 formed by inwardly bending a portion of the forward end of the wall 126 of the U-shaped member 127 (see particularly Figures 1 and 12). Referring to Figure 20 it will be seen that the key member or card 131 employed to actuate the door-operating mechanism comprises a plurality of spaced slots or elongated apertures 132 arranged adjacent one corner thereof in position to receive the spaced teeth 123 of the cylinder when the card is inserted into the card holder as shown in Figure 1. When the card is in the position shown in Figures 1 and 4, it will be seen that the inner end thereof will engage the lowermost teeth of the cylinder. As the end of the card is shoved under the cylinder, the end of the card and the notches therein will engage the teeth 123 of the cylinder and will thereby cause it to be rotated in a manner similar to that of a common form of rack and gear. Thus it will be seen that it will be impossible for a purchaser to actuate the device unless the member employed is provided with the necessary slots 132 to receive the teeth 123 of the cylinder. Slots 90 may also be provided in the key member 131 to mislead a person with fraudulent intent, such slots functioning to make the key member appear more difficult to duplicate. Obviously, these slots may be of any size, shape or number desired, as they have no direct function in the operation of the device.

A ratchet is preferably integrally formed on one end of the cylinder 122 and is adapted to be engaged by a spring-actuated dog 134 mounted upon a short shaft 135 which is born by the walls 125 and 126 of the U-shaped member 127. A locking member or latch 136 is also pivotally mounted upon the shaft 135 and this latch is adapted to be moved into the path of the locking bar 92 when the latter is in the position shown in Figure 7. When thus positioned, it will be impossible to actuate the locking bar until the latch has been moved out of engagement with the end thereof, which movement of the latch is effected by the rotation of the cylinder 122 by a key member. This latch preferably has one end outwardly projecting

through the plate 49 at the rear of the container so that the attendant may manually release the door-locking mechanism from the rear of the container. A torsion spring 137 is mounted on the shaft 135 and has one end secured to the wall 125 and its opposite end to the latch 136, thereby tending normally to retain the latch in the position shown in Figure 4, in which position it will be seen that the depending lug 138 of the latch will be yieldably held in contact with the bottom wall of the U-shaped member 127. The opposite end of the latch 136 is provided with an offset end-portion 139 which is adapted to be engaged by one of the teeth 123 of the cylinder when the latter is rotated by the insertion of a key member or card. When the cylinder 122 is rotated to the position shown in Figure 18, one of the teeth 123 thereof will engage the offset end-portion 139 of the latch and upwardly move it as shown. Such movement of the cylinder will therefore cause the latch 136 to be downwardly moved from the position shown in Figures 4 and 7 to that shown in Figures 6 and 18, wherein it will be seen that the latch will be moved out of engagement with the end of the locking bar 92, thereby permitting the latter to be moved into door-releasing position as shown in Figures 2 and 7. The opposite end of the latch 136 is also provided with an outwardly extending lug 141, (see Fig. 19) adapted to engage the lower edge of the dog 134 so that when the latch is moved to the position shown in Figure 18 the dog 134 will simultaneously be moved out of engagement with the ratchet 133 so that the purchaser may withdraw the key member from the card holder. When the dog 134 is in engagement with the ratchet 133, as shown in Figure 4, it will be impossible for the purchaser to remove the key member from the key slide after it has been thrust into the device sufficiently far to cause the teeth 123 of the cylinder 122 to be received in the slots 132 of the key card. The purchaser must therefore complete the inward movement of the card to effect the releasing of the door-locking mechanism before it can be withdrawn.

Means are provided to mark the unlocking key member or card 131 with a charged indication of the commodity or article which is thus removably delivered. Such means preferably consists in removably mounting a common form of type 142 upon a sleeve 143 rotatably mounted upon a shaft 144 which is selectively mounted in a pair of a plurality of apertures provided in the opposed upturned flanges or walls 111 of the card holder, as shown in Figures 4 and 15. When these vending machines are used in a series, they usually contain different commodities of which a purchaser may desire one or more; hence, the marking means must be so arranged that each machine will mark the same card in a different place. Means must therefore be provided whereby the shaft 144, carrying the type, may be changed or adjusted within the card holder and such is the purpose of the plurality of apertures 145 provided in each of the side walls 111 of the card holder. By means of these apertures it will readily be seen that if the type-bearing shaft 144 is moved from the position shown in Figure 4, and is mounted in bearing holes nearer the front end of the card holder, that an inserted card will obviously be printed nearer the outer end thereof. The type 142 is also adapted to be moved or adjusted transversely of the card holder so that the card may thereby be printed in a different vertical plane, as shown in the printing spaces defined by the lines forming longitudinal spaces upon the upper face of the card, as shown in Figures 1, 2 and 20.

In order that the lateral adjustment of the type may be quickly accomplished, the type is preferably provided with extensions or lugs 146 which are adapted to be demountably fitted into an annular groove or seat 147 provided in the sleeve 143 as shown in Figures 14 and 16. The lugs 146 may be integrally formed with the type, as shown in Figure 16.

Means are also provided to lock the type against relative rotation upon the sleeve 143. Such means preferably resides in the provision of a locking member 148 which is slidably mounted upon the sleeve 143. This locking member is provided with an open end slot 149 adapted to receive the type when the locking member is moved into type-locking position as shown in Figure 13. A key way 151 is provided in the sleeve 143 to receive a tongue 152 formed on the locking member 148 adapted to be received in the key way 151, as shown in Figure 17, thereby to prevent the locking member from relatively rotating upon the sleeve. To remove the type from the sleeve 143, the locking member will be longitudinally moved upon the sleeve 143 from the position shown in Figure 13 to that shown in Figure 14, after which the type may readily be removed from the sleeve 143. When a new type is mounted on the sleeve 143, the locking member 148 will again be moved to the position shown in Figure 13, thereby securely locking the type to the sleeve. It is to be understood that a different sleeve must be used each time the type is adjusted laterally within the card holder. By this novel arrangement of mounting the type upon the sleeve 143, and therefore the type carrying shaft 144, it will be seen that it will be impossible for the type to accidentally become detached therefrom or to relatively shift its position upon the sleeve. The locking member 148 is preferably provided with an annular disc

or flange 130 adapted to engage the key member to downwardly hold it against the bottom of the key holder and to prevent the type from accidentally contacting therewith.

The means provided for inking the type each time the device is actuated preferably resides in mounting an inking roll 153 upon a shaft 154 rotatably mounted in bearings provided in an oscillating frame 155 which is pivotally mounted upon a shaft 156 also borne by a pair of the apertures 145 of the side walls 111 of the card holder. The inking roll 153 may be of any suitable material which will absorb and retain a sufficient quantity of ink to supply the type with ink for a reasonable period of time. A leaf spring 157 is secured to the frame 155 adapted to be engaged by a cover 158 when the latter is in the position shown in Figures 4, 12, 13 and 15, thereby to yieldably hold the frame 155 and therefore the inking roll in a substantially fixed relation to the type 142. The purpose of the cover 158 is also to retain the shafts 144 and 156 in their operating positions when the cover is closed, as shown in Figure 13. In this Figure, it will be seen that the offset depending flanges 159 of the cover will overhang the ends of the shaft thereby preventing them from being moved longitudinally in their bearings. A guide disc 120 is preferably mounted adjacent the forward end of the key holder adapted to engage the upper surface of the key member when inserted into the key holder, thereby to prevent the card from bulging or raising up when contacting with the arched member 105. This disc is preferably carried by a shaft 110 mounted in a pair of the apertures 145 in the walls 111 of the card holder. Spacing sleeves 100 are also preferably mounted on the shaft 110 to retain the disk in its proper position on the shaft. The cover plate 158 is preferably hinged to the forward end of the card holder by such means as the shaft 161. From the foregoing, therefore, it will readily be seen that when it is desired to change the position of the die 142 and also the inking roll 153, the cover plate 158 will be raised to the position shown in Figure 2 after which the shafts 144 and 156 may readily be demounted from the apertures 145 and shifted to any selected position in the card holder. The cover plate will then be returned to its normal position as shown in Figures 4, 12 and 13 in which position the depending flanges 159 thereof will overhang the ends of the shaft thereby preventing their removal from the side walls 111 of the card holder.

Means are also provided for rotating the die-carrying shaft 144 to bring the die into contact with the inking roll 153 and the key card when the latter is inserted into the card holder. For this purpose, a pinion 162 is terminally mounted on one end of the sleeve 143 adapted to mesh with a rack 163 which is slidably mounted in the card holder or slide adjacent one side thereof, as shown in Figures 1, 2, 13 and 14. The rear end of the rack 163 is secured to a U-shaped frame 164 which therefore is slidable with the rack and is yieldingly held in its forward or normal position against a stop 165 as shown in Figures 1, 2 and 12. A sleeve 166 is rotatably mounted in the U-shaped frame 164 and has a rotor 167 secured to one end thereof. The face of the rotor is provided with a plurality of stop pins 168 outwardly projecting from the face thereof and adapted to be engaged by a stop plate 169 terminally secured to a shaft 170 which is slidably mounted in the sleeve 166. A cam 140 is preferably secured to the back face of the stop plate 169 and has a socket or depression 150 therein adapted to successively receive the ends of the pins 168 as the rotor 167 is rotated, thereby to retain it in its adjusted positions. A compression spring 160 is mounted upon the opposite end of the shaft 170 and functions to yieldably hold the cam 140 against one of the rotor pins 168. A split retainer ring 174 is preferably mounted in a groove 180 on the end of the sleeve 166 to prevent longitudinal movement of the sleeve.

In the operation of the device the end of the key member being inserted in the machine to release the locking means will engage the stop plate 169 and will thereby rearwardly move the frame 164 and therefore the rack 163. Such movement of the rack 163 will cause the die-carrying sleeve 143 to be rotated to bring the die into contact with the inking roll and subsequently with the key member to stamp the price of the commodity thereon. The frame 164 and rack 163 are normally held in their forward position by means of a coiled compression spring 171 mounted upon a pin 172 which has one end secured to the frame 164 and the other end slidably mounted in the upturned flange 173 of the card holder.

In devices of this kind it is desirable in order to prevent a purchaser from inserting a card twice in the same container with the fraudulent intent that the marking mechanism will simply cause a second marking to be accurately superposed upon the first, and hence but a single marking to appear upon the card, and it is the purpose of the stop pins 168 on the face of the rotor to prevent such repetition upon the same card. In the drawings, it will be noted that there are four such stop pins shown and that they are of various lengths, thereby successively changing the actuations of the printing shaft in timed relation to the movement of the card each time it is inserted into the same container. By thus changing the

timed relation of the printing with respect to the movement of the card, the repeated markings will appear as indicated in one of the rectangular squares shown on the card in Figure 20. The spring 160 functions to move the cam 140 into engagement with one of the pins thereby to retain the rotor in its adjusted positions. (See Fig. 10.)

Means are also provided for intermittently actuating the rotor to bring a different stop pin into contact with the cam 140 of the stop plate 169, each time the mechanism is operated. The means provided for thus partially rotating the rotor each time the device is operated preferably consists in the provision of a yieldable hook 175 which is mounted upon a guidebar 176 having one end pivotally connected to the operating lever 85 for simultaneous operation therewith. One end of this guide bar is supported by an upright guide plate 177 which is suitably secured to the top wall or slide 23 of the container. A tension spring 178 has one end connected to the upright guide plate 177 and its other end connected to the offset portion of the guidebar 176 so that the bar 176, and therefore the hook 175, are under a constant force tending to move the hook to a position over the rotor 167 (see Figure 11). This spring also functions to constantly exert a pull upon the operating lever 85 to move it from the position shown in Figures 1 and 7 to that shown in Figures 2 and 6, the latter being locked against such movement when the locking bar 92 is in contact with the latch 136 as shown in Figures 1 and 7.

Referring to Figures 1, 2 and 8, it will be noted that the rotor preferably has a plurality of ratchet teeth formed on the periphery thereof one of which is adapted to be engaged by the hook 175 each time the operating mechanism is actuated. When the parts are in door-locking position as shown in Figure 1 and the key card is thrust into the card holder, the end thereof will engage the stop plate 169 which will cause the frame 164, carrying the rotor, to be rearwardly moved with the card until the rotor reaches the position shown in Figure 2, in which position it will be substantially in the path of the hook 175 to be engaged thereby as will hereinafter be described. Such movement of the rotor will simultaneously cause the frame 164 to be rearwardly moved until the upright lug 179 provided thereon will be moved to a position back of the end of the guide bar 176 as shown by the dotted lines in Figures 1 and 8. Such movement of the card will also cause the cylinder 122 to be rotated as a result of the teeth 123 thereof engaging the slots 132 in the card. Rotation of the cylinder will cause the latch 136 to be downwardly moved out of engagement with the locking bar 92, thereby causing the operating lever 85 and its associated parts to be moved from the position shown in Figure 1 to that shown in Figures 2 and 8, wherein it will be seen that the hook 175 is in position to engage the rotor when the lever 85 is again moved into door-locking position. As soon as the mechanism has been actuated, as above described, the door 31 at the front end of the container will be unlocked and partially opened, and the purchaser may then remove the article from the container and also withdraw the key member from the card holder. When the key member is withdrawn from the key holder the upright lug 179 of the rotor frame 164 will engage the end of the guidebar 176 and will thereby hold the rotor in a position beneath the hook 175 as shown in Figures 2 and 8. It will be impossible for the attendant to actuate or set the door-locking mechanism until after the key card has been withdrawn from the key holder caused by the upper end of the post 99 being seated in the notch 98 in the lower edge of the locking bar 92. As soon, however, as the key card has been withdrawn from the key holder the attendant may refill the container and again set the door-locking mechanism by moving the lever 85 from the position shown in Figure 2 to that shown in Figure 1. Such movement of the lever 85 will cause the hook 175 to intermittently rotate the rotor 167, which rotation of the rotor will be completed before the guide bar 176 is moved out of engagement with the upright lug 179 of the rotor frame. When the guide bar 176 is moved out of engagement with the lug 179 the rotor frame and rotor will be returned to the position shown in Figure 1 by means of the compression 171. By thus intermittently rotating the rotor for each operation of the mechanism, a different stop 168 will be presented to the key card each time it is inserted into the card slide.

Means are preferably provided for partially outwardly moving the key card slide or holder when the hook 119 is lifted out of engagement with the aperture 118 at the rear end of the card holder. Such means preferably resides in the provision of a bar 181 which is slidably mounted in upright guides 182 secured to the top wall 23 of the container as shown in Figures 2, 8 and 11. One end of this bar is yieldingly held against an outwardly projecting lug 183 provided on one of the side walls 111 of the card holder by means of a tension spring 184 having one end secured to the rear end of the bar and the other end to one of the guides supporting the bar. By means of this bar, it will be seen that as soon as the hook 119 is moved out of engagement with the aperture 118, the spring 184 will cause the card holder to be outwardly moved from the container

to the position shown in Figure 5, after which it may readily be removed for such adjustments as are necessary to be made to properly locate the marking die within the card holder.

Means are preferably provided in conjunction with this novel vending machine whereby the attendant may readily and conveniently see when one of the containers has been emptied by a purchaser removing the article therefrom. Such means preferably resides in mounting a signal light 185 at the rear end of the container, which light normally is dark and is adapted to be lighted each time the door-locking mechanism has been moved into door-unlocking position. This light is mounted in a socket 186 supported by an insulating block 187 which is secured to the top wall of the container by means of brackets 188. A metallic strip 189 has one end electrically connected to the socket 186 and its other end similarly connected to a conductor 191 which has its other end connected to a contact 192 mounted in an insulating block 193 mounted adjacent the forward end of the container. The metallic strip 189 is suitably mounted upon an insulating block 194 which functions to insulate it from the metallic parts of the container (see Figures 1, 2 and 3). Flexible contact fingers 195 and 196 are also mounted on the block 194. These two contact fingers are preferably integrally formed from a single piece of metal as shown in Figure 11. A relatively shorter contact finger 197 is mounted at the opposite end of the block 194 and has a conductor 198 connected thereto which leads to a contact 199 mounted in the insulating block 193 adjacent the forward end of the container. It is to be understood that the contacts 192 and 199 are electrically separated from each other as shown by the dotted lines in Figure 2. The contacts 192 and 199 are adapted to be moved into electrical connection with the spring clips 201 and 202, when the top wall or slide 23 of the container is in normal position as shown in Figures 1, 2 and 3. The spring clips 201 and 202 are electrically connected to the main feed wires 203 so that when the contacts 199 and 192 are in electrical contact therewith, current will be supplied to the conductors 191 and 198.

The means provided for opening and closing the circuit to the signal light 185 is conveniently effected by means of a depending circuit-closing blade 204 which is secured to an insulating block 205 secured to the guide-bar 176 by means of screws 206. The hook 175 is also preferably mounted on the insulating block. When the operating lever 85 is in the position shown in Figure 1 and Figure 11, it will be seen that the circuit-closing blade 204 is out of contact with the contact finger 196 so that the signal light circuit will be opened. As soon, however, as the mechanism is actuated, by the insertion of a key card, the operating lever will be moved from the position shown in Figure 1 to that shown in Figures 2 and 8 wherein it will be seen that the circuit-closing blade 204 will be moved into contact with the contact fingers 196 and 197 thereby effecting the closing of the circuit with the result that the signal light will be lighted, thereby warning the attendant that the contents of the container have been removed. As soon as the container has again been replenished and the parts moved into door-locking position, the signal light circuit will again be opened. The light 35 illuminating the interior of the container is electrically connected to the conductors 191 and 198 by connectors 100 so that it will constantly be lighted when the container is intact, as shown in Figures 1 and 2. A main switch (not shown) may be provided for opening the circuit in the main line wires 203 when the container is not in use.

A locking member 207 is preferably pivotally mounted upon each side wall 22 adjacent the upper edge thereof and each such member has an upright lug 208 adapted to be received in a slot 209 provided in the upper wall 23 of the container as shown in Figures 1 and 2 and 19. Flat springs 211 are secured to the pivotally mounted ends of the locking members and have their flexible ends bearing against the wall 23 as shown in Figure 9. These locking members function to lock the top wall 23 to the side walls 22 when the container is assembled for operation. Each locking member is preferably provided with an inwardly extending finger grip 212 whereby they may be conveniently moved out of engagement with the slots 209 in the wall 23 when it is desired to remove the latter from the container for repairs or other purposes.

In the operation of this novel vending machine, the attendant will first place the commodity to be vended within the container after which he will move the latch 85 into door-locking position as shown in Figure 1. The purchaser may then insert the key card or member into the mouth 115 of the card holder, as hereinbefore described, until the end thereof engages one of the stops 169 of the rotor and also the teeth 123 of the cylinder 122 which will cause the door-operating mechanism to be released after which he may conveniently remove the article from the container. As a result of the novel construction of the pivotally mounted arms 101 and 104 and the upright posts 99 it will be impossible for the attendant to effect the closing of the door 31 until after the purchaser has removed the key card from the key holder. This is caused by means of the arm 104 being downwardly forced by the

arched member 105 engaging the lower face of the key member, such action of the arm 104 causing the post 99 to be yieldably held in the notch 98 of the locking bar 92, thereby locking it against movement. As soon, however, as the key card has been removed, the tension means or spring 108 will downwardly move the post 99 out of contact with the notch 98 in the locking bar, after which the attendant may again move the lever 85 into door-locking position. Also by means of the stop lug 83 on the latch 77, it will be impossible for the operator to set the door-locking mechanism when the door 31 is in open position, caused by the projection 74 of the bell crank 67 engaging the lug 83, it will, therefore, be seen that before the attendant can move the parts into door-locking position the hook 76 of the door 31 must be in the position shown in Figure 3, in which position the projection 74 will engage the cam face of the hook 76 and will thereby inwardly move the door to closing position, the end of the hook causing the latch to be inwardly moved so that the stop-lug 83 will be moved out of the path of the projection 74 so that the closing of the door may be completed. If desired, the attendant may conveniently release the door-locking mechanism from the back of the container by simply downwardly moving the outwardly projecting end-portion of the latch 136, as shown in Figure 18.

The number of teeth 123 on the cylinder 122 may be varied, if desired, and their size and shape may also be changed. When this is done, the apertures 132 in the key card must be changed accordingly in order to receive the teeth. Thus it will be seen that should a purchaser attempt to defraud the machine by the use of a counterfeit key member, the owner or attendant may prevent such attempt by simply changing the number of teeth in the cylinder or by changing the shapes and sizes. In order that such a change may readily be made, the teeth are preferably integrally formed on the cylinder so that the entire cylinder is removed when such a change is necessitated. The cylinder may conveniently be removed by removing the end plate or bar 215 from the wall 125 of the U-shaped member 127. This device is therefore substantially fool proof as it will be impossible for the attendant to place an article within the container and move the door-locking-mechanism into locking position without positively closing the door 31 at the front of the container.

When it is desired to remove the top slide or walls 23 from the container, the card holder will first be removed from its guides as a unit by releasing the hook 119 from the aperture 118. The hook 119 may be conveniently moved out of engagement with the aperture 118 to release the slide by means of the master key 213, shown in Figure 21. This master key is preferably of metal and has an extension 214 provided thereon adapted to engage the hook 119 to lift it out of the aperture 118 when thrust into the key holder. The screw 73 will then be loosened after which the arms 69 may be oscillated upon the pin 71 so as to downwardly move the pivot pin 68 of the bell crank 67. Such movement of the bell crank will cause the terminal 88 of the upright end thereof to be downwardly moved out of engagement with the aperture 87 in the short end of the L-shaped operating arm 85. The locking members 207 will then be downwardly moved, by means of the finger grips 212, until the lugs 208 are moved out of engagement with the slots 209. The light bulb 35 is then removed from its socket after which the entire upper wall, carrying the operating mechanism, may be rearwardly removed from the container.

I claim as my invention:

1. A vending machine including a container for a commodity, said container comprising an open ended casing having the upper wall demountably mounted thereon, a closure for the container, mechanism for locking the closure in container-closing position, mounted on the demountable upper wall and one of the side walls of the casing, and said means being adapted to be unlocked by an instrumentality to permit removal of the commodity.

2. A vending machine including a casing open at both ends and having its upper wall demountable; an open-ended container for a commodity mounted within said casing, a closure for each end of the container, mechanism for locking one of said closures in container-closing position, mounted upon a wall of said casing, and means cooperable with said locking means mounted on said demountable wall and detachably connected with said locking mechanism and adapted to be actuated by a key member to release said locking mechanism to permit removal of the commodity from the container, and the detachable connection between said actuating means and said locking mechanism permitting removal of the demountable wall from said casing.

3. A vending machine including an open-ended container for a commodity, a closure for each end of the container, means to lock one of said closures in container-closing position and adapted to be unlocked by a key member to permit removal of the commodity, and means tending normally to partially open said closure and also functioning to prevent the closure-locking means from being actuated when the closure is opened a predetermined distance.

4. A vending machine including a container for a commodity, said container com-

prising a casing having its front and rear ends open, a closure for each end of the container, means to lock the front closure in container-closing position, and adapted to be unlocked by a key member of sheet material to permit removal of the commodity, and means at the rear of the container for manually actuating said locking means to lock said closure in container-closing position, when opened a predetermined distance, said means comprising an L-shaped lever pivotally mounted on the top wall of the casing and having one end operatively associated with said locking means.

5. A vending machine including a container for a commodity, a closure therefor, means movable to lock the closure in container-closing position, the locking means being normally adapted to remain in unlocked position, a bar connected to the locking means and movable therewith, a latch pivotally mounted on the machine and normally positioned in the path of the bar whereby the locking means may be maintained in locking position, and means for moving the latch out of engagement with the bar whereby the locking means is moved to unlocked position to permit removal of the commodity.

6. A vending machine including a container for a commodity, a closure therefor, means movable to lock the closure in container-closing position, the locking means being normally adapted to remain in unlocked position, a bar connected to the locking means and movable therewith, a latch mounted on the machine in the path of said bar whereby said locking means may be maintained in locking position, means operable by a key member to move the latch out of engagement with said bar to permit the latter to be moved, whereby said locking means is moved to unlocked position and the commodity may be removed, and means automatically adapted, upon movement of said locking means to closure-locking position, to return said latch to bar-detaining position.

7. A vending machine including a container for a commodity, a closure therefor, means movable to lock said closure in container-closing position, the locking means being normally adapted to remain in unlocked position, a locking bar connected to the locking means and movable therewith, a latch pivotally mounted on the machine adapted to engage said bar whereby the locking means may be maintained in locked position, and means adapted to be actuated by a key member to move the latch out of engagement with the locking bar, whereby the locking means may move to unlocking position.

8. A vending machine including a container for a commodity, a closure therefor, means movable to lock the closure in container-closing position and adapted to be unlocked by a key member to permit removal of the commodity, a key holder on the container having a key way therein adapted to receive said key member, and means adapted to be engaged by said key member to move said locking means to its released position and prevent withdrawal of said key member until said locking means has been so moved.

9. A vending machine including a container for a commodity, a closure therefor, means movable to lock said closure in container-closing position, said locking means being normally adapted to remain in unlocked position, a locking bar connected with said locking means, a latch engageable with said bar to retain the latter in locking position, a key way adapted to receive a key member, means operable by said key member to move said latch out of engagement with said bar and to permit the latter to move to unloading position, whereby the closure is released to permit removal of the commodity, and means actuated by said key member to prevent resetting of said locking means when a key member is inserted in said key way.

10. A vending machine including a container for a commodity, a closure therefor, means movable to lock the closure in container-closing position, the locking means being normally adapted to remain in unlocked position, a locking bar connected to the locking means and movable therewith, a key way in the machine adapted to receive a key member to unlock said closure to permit removal of the commodity, a spring-actuated latch member mounted adjacent the key way adapted to engage the end of the locking bar to maintain it in locking position, a toothed cylinder having its teeth projecting into the path of the key member to be engaged thereby to rotate said cylinder, and means on the cylinder adapted to engage the latch member, when said cylinder is rotated, thereby to move it out of engagement with the locking bar whereby the locking means is moved to an unlocked position to permit removal of the commodity.

11. A vending machine including a container for a commodity, a closure therefor, means to lock the closure in container-closing position and adapted to be unlocked by insertion of a key member to permit removal of the commodity, a key holder having a key way adapted to receive said key member, a cylinder rotatably mounted in the key holder over said key way, a plurality of spaced peripheral teeth on the cylinder projecting into the path of the key member, and said key member having a plurality of apertures adjacent one end thereof adapted to receive

the teeth on the cylinder, thereby to cause the latter to be rotated to release the locking means.

12. A vending machine including a container for a commodity, a closure therefor, means to lock the closure in container-closing position and adapted to be unlocked by a key member to permit removal of the commodity, a key holder on the container having a key way therein adapted to receive the key member, a cylinder rotatably mounted in the key holder, a plurality of spaced teeth on the cylinder projecting into the path of the key member, said key member having a plurality of spaced apertures adjacent one end thereof adapted to receive the teeth in said cylinder, a ratchet device adapted to be operatively connected with said cylinder to limit a portion of its movement to one direction so that when the key member is moved into the key way and the teeth of said cylinder are received in the apertures thereof, said key member cannot be withdrawn from said key way until it has been moved therein a predetermined distance sufficient to release the closure locking means.

13. A vending machine including a container for a commodity, a closure therefor, means movable to lock the closure in container-closing position, the locking means being normally adapted to remain in unlocked position, a locking bar connected to the locking means and movable therewith, a key way in the machine adapted to receive a key member to unlock said closure to permit removal of the commodity, means to retain said locking bar in closure-locking position and adapted to be released by said key member, and a post actuated by the key member to engage and prevent movement of said bar when in an unlocked position and the key member is inserted in the key way.

In witness whereof, I have hereunto set my hand this 17th day of February, 1925.

WOODLAND H. GILBERT.