Sept. 4, 1923. 1,467,021

J. N. TZIBIDES

LABEL APPLYING DEVICE

Filed Aug. 9, 1921 2 Sheets-Sheet 1

Fig. 1.

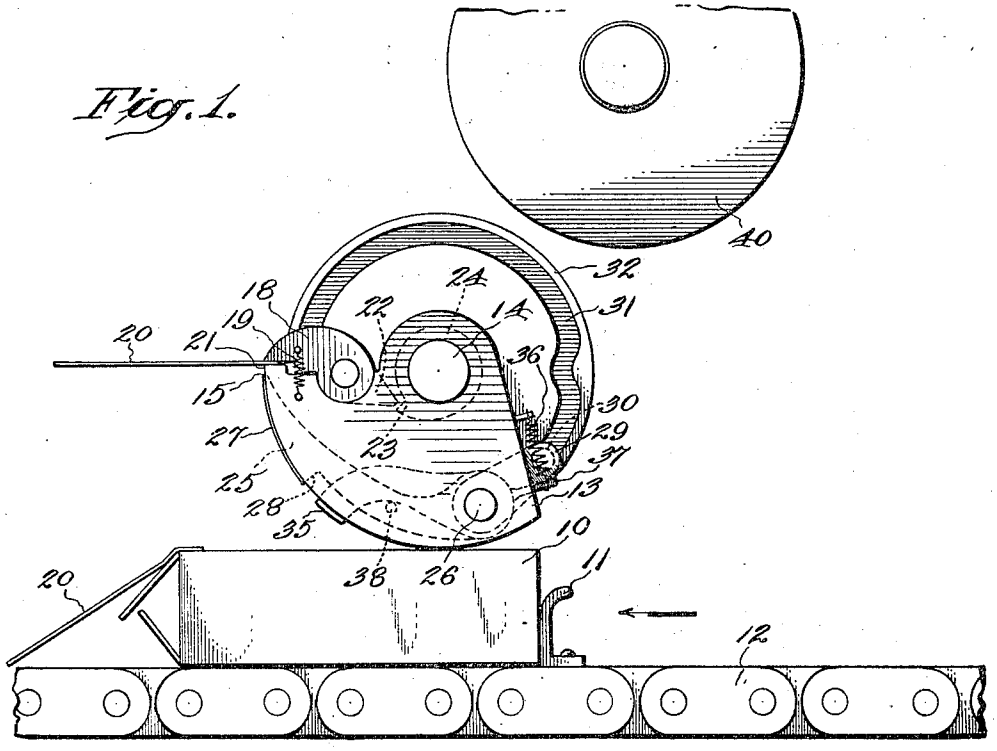

Fig. 2.

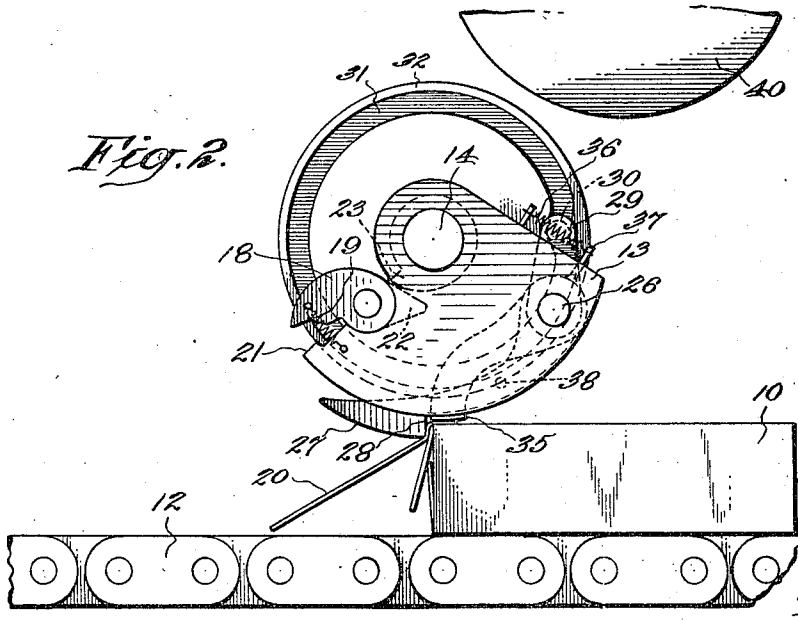

Inventor
James N.
Tzibides,

By his Attorneys
Meyer, Cavanagh, Whitehead & Hyde

Sept. 4, 1923. 1,467.021

J. N. TZIBIDES

LABEL APPLYING DEVICE

Filed Aug. 9, 1921 2 Sheets-Sheet 2

Fig. 3.

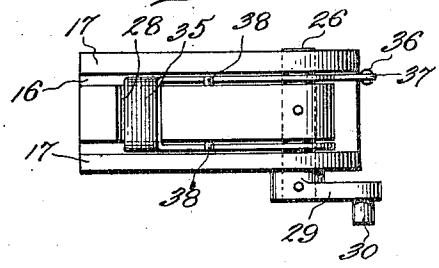

Fig. 5.

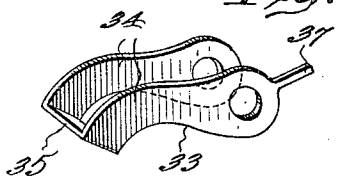

Fig. 4.

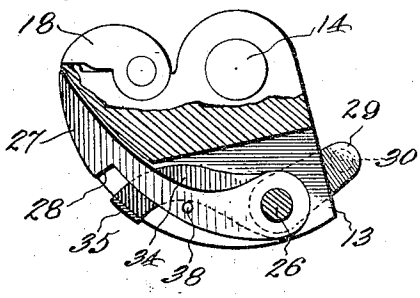

Fig. 6.

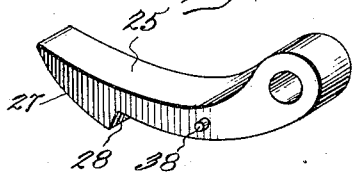

Fig. 7.

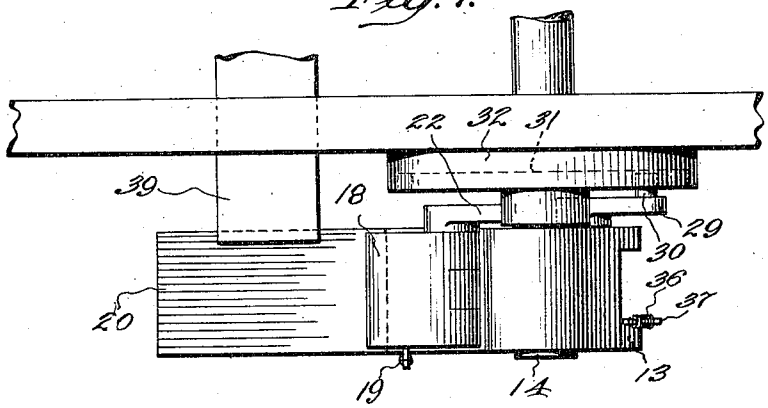

Inventor

James N. Tzibides,

By his Attorneys

Myers, Cavanagh, Whitehead & Hyde

Patented Sept. 4, 1923. 1,467,021

UNITED STATES PATENT OFFICE.

JAMES N. TZIBIDES, OF NEW YORK, N. Y., ASSIGNOR TO R. J. REYNOLDS TOBACCO COMPANY, OF WINSTON-SALEM, NORTH CAROLINA, A CORPORATION OF NEW JERSEY.

LABEL-APPLYING DEVICE.

Application filed August 9, 1921. Serial No. 490,824.

To all whom it may concern:

Be it known that I, JAMES N. TZIBIDES, a subject of the King of Greece, and resident of New York city, in the county of Kings and State of New York, have invented certain new and useful Improvements in Label-Applying Devices, of which the following is a specification.

My invention relates to label applying mechanism, and is particularly directed to improvements in means for applying one end of a label to the side of an article so that the main portion of the label will project beyond an end of the article for subsequent application thereto. More specifically, my invention is an improvement upon devices adapted to be employed in machines disclosed in Patent No. 1,302,735, issued May 6, 1919, and in my co-pending application Serial No. 400,690, though certain principles are likewise applicable to other types of mechanism for accomplishing the same or a similar result.

In machines of this type a plurality of packages is conveyed successively beneath the label applying means, which seizes a label from the label feeding mechanism, passes it under a gluing roller to be coated with adhesive, and then applies the rear end of the label to one side of a package as it passes under the device, in such a manner that devices subsequently operating on the package will fold the free end of the label downwardly across the advance end of the package and if desired onto the under side thereof.

The specific machines above mentioned are particularly designed to apply revenue stamps across the ends of cigarette packages, the stamp forming a seal for such ends in the usual manner.

A principal object of my invention is to provide means combined with the label applying device for bending the advance end of the stamp downwardly, since the tendency of the adhesive to curl the label, together with the most advantageous arrangement of the mechanism for applying the label to the end of the package, makes it highly desirable that the label be deflected downwardly upon leaving the label applying device.

Another object is to combine means for bending the label downwardly with means for stripping the label positively from the applying device.

I have also introduced several improvements specific to the type of applying device disclosed in said patent and application. This device consists of a rotating member having an arcuate label-carrying surface provided with a longitudinal recess in which the stripping arm is located, the latter being projected outwardly at the proper time when the label is in contact with the package and the label end is released by the jaws which normally hold it.

Heretofore pressure of the glue roller has tended to force the label into the recess over which it is located, producing imperfect application of adhesive, particularly at the rear end of the label which lies over a notch or cut-away portion in the stripping arm. I have so constructed and arranged the stripping arm according to my present invention that it will provide in part a support for the label when passing under the gluing roller. I have furthermore provided an independent support for the rear end of the label which is located over the notched portion of the stripping arm, so that such end is positively pressed against the roller and is sure to receive its quota of adhesive.

I have further improved the specific construction of the parts in ways that will be apparent from the detailed description, reference being made in particular to the employment of means for yieldably supporting the stripping arm so that it will provide a proper resilient support for the label when adhesive is being applied thereto.

Other objects and advantages of my invention will be apparent from the following description, taken in connection with the accompanying drawings, in which:

Fig. 1 is a side elevation, somewhat diagrammatic in form, of a preferred form of my invention at the stage where a label is initially gripped by the applying device.

Fig. 2 is a similar view showing the downward bending of the label,

Fig. 3 is an edgewise plan view of the applying device alone,

Fig. 4 is a side elevation of the same, parts being broken away,

Figs. 5 and 6 are perspective views of the

stirrup-shaped label end presser, and the stripper arm respectively, and

Fig. 7 is a plan view of the label applying device and associated parts, the conveyor and gluing mechanism being omitted.

I have illustrated my invention as applied to the machines shown in my said patent and application, in which successive packages 10 are continuously advanced by pushers 11 on sprocket chain 12 beneath the label applying device. The latter consists of an arcuate body 13 mounted on a continuously revolving shaft 14 and having an arcuate label-carrying face 15. This face is provided with a longitudinal recess 16, producing marginal surfaces 17 upon which the edges of the label are supported. A jaw 18 is pivotally mounted on the body 13 and is normally maintained by springs 19 in position to grip a stamp or label 20 against a jaw face 21 on the body 13 at one end of the surface 15. Jaw 18 is rocked about its pivot to release a label at the proper moment by suitable means, such as a laterally extending tail piece 22 engaging a cam extension 23 on a sleeve 24 rigidly connected to the frame.

The stripper arm 25 is pivotally mounted in recess 16 on a short shaft 26 journalled in the body 13, and includes an arcuate label-supporting face 27 and a stamp-bending shoulder 28. Means is provided for operating the stripper arm 25, such as arm 29 extending laterally from shaft 26 on which it is rigidly mounted at the rear of the body 13, arm 29 carrying a roller or pin 30 engaging a slot 31 in cam 32 rigidly mounted on the frame.

I also provide means for supporting the label in the recess to the rear of shoulder 28, so that the rear end of the label will be sure to receive adhesive, and will be positively pressed against the side of the article to be labeled. This may consist in a device resiliently maintained in proper position in recess 16, many different types of device of this kind being available for the purpose. I have shown one form, which includes a stirrup-shaped presser 33 shown best in Fig. 5, including a pair of side plates 34 pivotally mounted on shaft 26, and a transverse presser plate 35 connecting the ends of plates 34 normally located in position to support the stamp. For the latter purpose I may employ a spring 36 mounted at one end on the body 13 and connected at the other end to a lug 37 on a side plate 34, the spring tending to force the presser plate 35 outwardly. I also provide a pin 38 on the stripper arm 25 adapted to engage a side plate 34 and limit the outward movement of plate 35.

In operation a label is fed by grippers 39 between the face 21 and jaw 18, where the least possible portion of the extreme end of the label is grasped through release of jaw 18 when tail piece 22 rides over the cam extension 23, as shown in Fig. 1. The continued revolution of the body 13 brings the label 20 against glue roller 40, which is preferably so arranged and contoured that it will apply adhesive only to an area slightly spaced from the side edges of the label, as disclosed in my copending application above mentioned. As the label passes under the glue roller it is centrally supported first by the face 27 of stripper arm 25, and then, at the rearmost end of the stamp, by the presser plate 35. The arm and plate may, if desired, be arranged in such a way that they will not contact with the roller 40 when a label is not fed to the jaws 18 and 21; but if desired this arrangement may be dispensed with. Furthermore, the parts are preferably so proportioned that arm 25 has some slight play, this arrangement constituting surface 27 a yielding support for the label through the action of spring 36. With this specific construction I have therefore provided a yielding support for the label in recess 16, assuring a thorough application of adhesive thereto, and particularly to the rear end thereof where the label is first applied to the package.

Shaft 14 and feed chain 12 are so synchronized that the advance end of package 10 will first engage the label-supporting surface 15 adjacent the rear end of the label, and approximately beneath the presser plate 35. At this point in the operation, shown best in Fig. 2, jaw 18 is rocked to open position, releasing the front end of the label, and stripper arm 25 is simultaneously swung outwardly to free the label positively from the surface 15. This movement of the stripper arm releases the label pressing device 33, so that the presser plate 35 forces the rear end of the label positively against the side of package 10, assuring effective engagement therewith. At the same time shoulder 28 on the stripper arm 25 is so proportioned and located that it will force the label downwardly and across the front end of the package, producing a definite bend in the label that will assure its proper positioning during subsequent operations. It is also desirable that shoulder 28 be so proportioned and arranged that it will bring an adhesively coated portion of the label in contact with the advance end of the package to insure the retention of the downward bend; and where the package has a sharp angled edge, as in the usual tobacco packages, shoulder 28 may crease the label along such edge, and apply it to a portion of the package end immediately below the edge. A slight further rotation of the body 13 will serve to retract the stripper arm 25 and presser member 33, and to place the jaws in position to receive another label.

While I have described a preferred form

of my invention, and in particular have included several improvements which are specifically adapted to the particular construction shown in the patent and application above mentioned, it will be apparent that certain features are applicable to other arrangements and mechanisms. For instance, the label bending device is not necessarily limited to machines in which the package is given a continuous movement past the label applying device. Furthermore, my invention is not restricted to the particular form of presser device for supporting and applying the rear end of the label, nor to the means shown for controlling the action thereof.

It will also be understood that the term "label" is used herein in a generic sense to include labels, stamps, sealing strips, wrapper elements, or other similar sheets. Furthermore, while the stamp applying device has been described in detail in a form similar to that employed in the patent and application mentioned, it will be apparent that many parts thereof can be substantially changed without affecting my invention; and in particular the means for holding the stamp in position thereon, which in the form shown consists of a mechanically actuated gripper, may be of any desired type.

I claim:

1. A label applying device, including means for carrying and applying to an article a label with a portion thereof projecting beyond a face of the article, and means connected to the first mentioned means for bending said portion of the label across and in advance of said face in position for subsequent application thereto.

2. A label applying device, including means for carrying and applying to an article a label with a portion thereof projecting beyond a face of the article, and means carried by the first mentioned means for bending said portion of the label across and in advance of said face in position for subsequent application thereto.

3. A label applying device, including continuously rotated means for carrying and applying a label to an article having a sharp edge so that a portion of the label will project beyond said edge, and means for bending said portion sharply across said edge to form a crease and position said portion in advance of and in position to be subsequently applied to the adjacent face of the article.

4. A label applying device, including continuously rotating means for carrying and applying to an article a label with a portion projecting beyond an edge of the article, and means for bending said portion over the edge of and against the upper part of the adjacent face of the article to provide adhesive connection between the label and article and retain said portion in position across said face but in advance thereof ready for subsequent application thereto.

5. A label applying device, including continuously rotating means for carrying and applying to a continuously traveling article a label with a portion thereof projecting beyond a face of the article, and means carried by said first named means for bending said portion of the label across and in advance of said face in position for subsequent application thereto.

6. A label applying device, including continuously rotating means for carrying and applying to an article a label with a portion thereof projecting beyond a face of the article, and means carried by said rotating means for bending said portion of the label across and in advance of said face in position for subsequent application thereto.

7. A label applying device, including means for applying to an article a label with a portion thereof projecting beyond a face of the article, including a continuously rotating label support, a label bending element carried by and rotating with said support, and actuating means operative upon application of the rear end of a label carried by said support to the article to shift said element outwardly against the portion of the label extending beyond said article face to bend said portion across and in advance of said face in position for subsequent application thereto.

8. In a label applying device, a rotating label carrier having a longitudinal recess, means for applying adhesive to a label on said carrier, a support for the label during gluing located in said recess, and means for projecting said support outwardly to strip the label from the carrier.

9. In a label applying device, a rotating label carrier having a longitudinal recess, means for applying adhesive to a label on said carrier, a support for the label during gluing located in said recess, means for projecting said support outwardly to strip the label from the carrier, and means carried by said support operative upon the outward movement thereof to bend the advance end of the label across a face of the article to which it is applied and in advance of said face in position for application thereto.

10. A label applying device, including a rotating label carrier having spaced arcuate label-supporting faces with a recess therebetween, a stripper arm movably mounted in the recess and provided with a shoulder, and means for projecting said arm outwardly upon application of the rear end of a label on the carrier to an article adjacent an edge thereof with the label extending beyond said edge, said shoulder being proportioned and positioned to bend the label sharply about said edge upon projection of said arm to

locate the advance end of the label across and in advance of the adjacent article face in position for application thereto.

11. A label applying device having spaced label supporting surfaces with a recess therebetween, a separate support for the rear portion of the label located in said recess, and means for resiliently forcing said support outwardly upon application of the rear end of the label to an article.

12. In a device for applying to an article a label with a portion thereof projecting beyond a face of the article, a label carrier having a longitudinal recess in its label supporting surface, a stripper arm located in the recess, means for actuating the stripper arm, and a separate support for the rear end of the label also located in said recess.

13. In a device for applying to an article a label with a portion thereof projecting beyond a face of the article, a label carrier having a longitudinal recess in its label supporting surface, a stripper arm located in the recess and having a cut-away portion for clearance of the front end of the article, and a support for the rear end of the label located in the recess and in the cut-away portion of said arm.

14. In a device for applying to an article a label with a portion thereof projecting beyond a face of the article, a label carrier having a longitudinal recess in its label supporting surface, a stripper arm located in the recess and having a cut-away portion for clearance of the front end of the article, a support for the rear end of the label located in the recess and in the cut-away portion of said arm, and means for projecting said support outwardly by application of the rear end of the label to said article.

15. In a device for applying to an article a label with a portion thereof projecting beyond a face of the article, a label carrier having a longitudinal recess in its label supporting surface, a stripper arm located in the recess, a support for the rear end of the label located in said recess, means for shifting said arm outwardly to strip the label from the carrier, and means rendered operative upon the shifting of said arm for forcing the support outwardly to press the rear end of the label against the article.

16. A label applying device, including means for carrying and applying to an article a label with a portion thereof projecting beyond a face of the article, means carried by said applying means for bending said portion of the label across and in advance of said face in position for subsequent application thereto, and article conveying means for presenting an article to the applying and bending means operated in synchronism with both of said last named means.

17. A label applying device, including a rotating label carrier, a conveyor synchronized therewith for presenting successive articles in position for application of a rear end of a label thereto by said carrier with a portion of the label projecting beyond a face of the article, and means on said carrier operated in synchronism with said conveyor for bending said portion of the label across and in advance of said article face in position for subsequent application thereto.

Signed at New York City, in the county of New York and State of New York, this 16th day of July, A. D. 1921.

JAMES N. TZIBIDES.