G. I. ROCKWOOD.

SUPERVISORY ALARM SYSTEM.

APPLICATION FILED MAR. 20, 1914.

1,185,544.

Patented May 30, 1916.

2 SHEETS—SHEET 1.

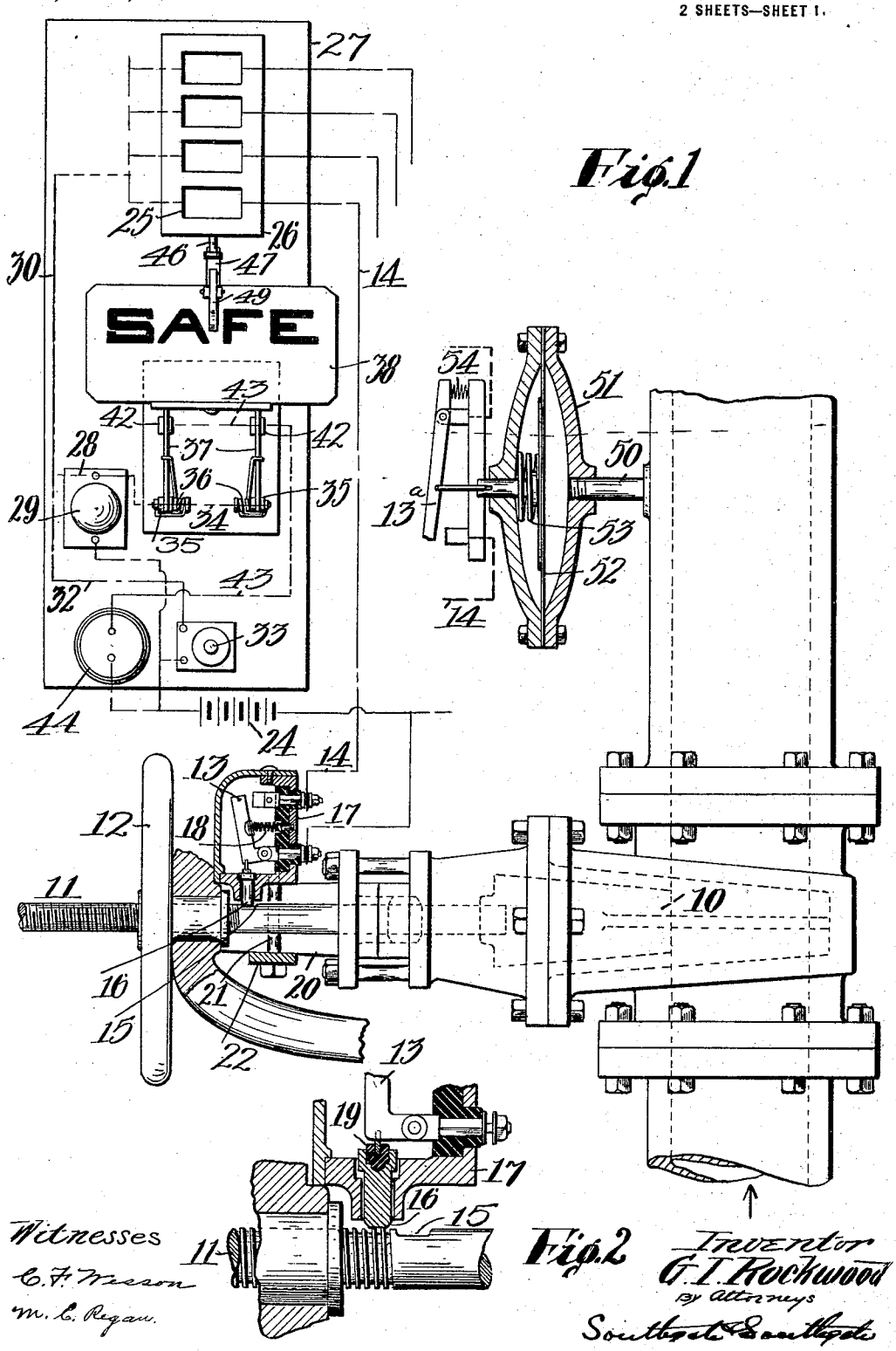

Fig. 1

Fig. 2

Witnesses

C. F. Mason

M. C. Regan.

Inventor

G. I. Rockwood

By Attorneys

Southgate & Southgate

THE COLUMBIA PLANOGRAPH CO., WASHINGTON, D. C.

G. I. ROCKWOOD.

SUPERVISORY ALARM SYSTEM.

APPLICATION FILED MAR. 20, 1914.

1,185,544.

Patented May 30, 1916.

2 SHEETS—SHEET 2.

Fig. 3

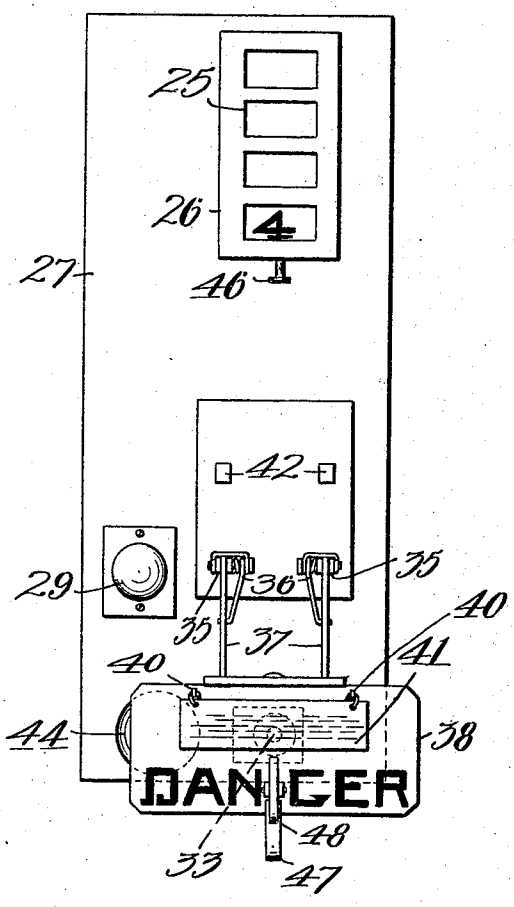

Fig. 4

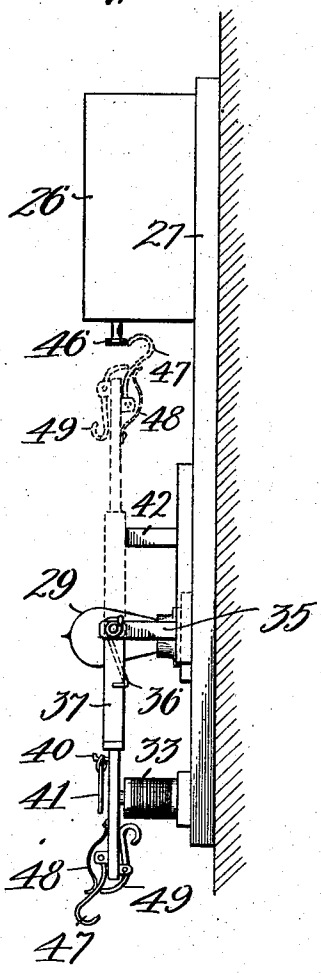

Witnesses:

C. F. Mason

M. E. Regan

Inventor

G. I. Rockwood

by attorneys

Southgate & Southgate.

UNITED STATES PATENT OFFICE.

GEORGE I. ROCKWOOD, OF WORCESTER, MASSACHUSETTS.

SUPERVISORY ALARM SYSTEM.

1,185,544. Specification of Letters Patent. Patented May 30, 1916.

Application filed March 20, 1914. Serial No. 826,108.

To all whom it may concern:

Be it known that I, GEORGE I. ROCKWOOD, a citizen of the United States, residing at Worcester, in the county of Worcester and State of Massachusetts, have invented a new and useful Supervisory Alarm System, of which the following is a specification.

Although capable of general use this invention is particularly adapted for use in connection with automatic fire extinguisher systems and will be described with special reference thereto.

The invention is designed for the purpose of providing means whereby when the system to which it is applied is to be tampered with, as for the purpose of repairs, adjustment, or tests, some person, on whom the responsibility rests, shall be obliged to see that a signal is operated in such a way as to show at some central point, as for example, the office of a manufacturing establishment, that the system is out of order and why; means whereby this signal cannot be left in position to indicate danger unless the system is out of order so that the operator cannot tamper with the signal and then perhaps forget to perform the necessary repairs, etc., on the system and so that at least two persons must be cognizant of the facts, because the one who operates the signal must hold it in the danger position until the system is put out of order, in order to have the signal remain in that position; means whereby if the system is put out of order in any way without the display of the danger signal an alarm will be given, preferably by an audible signal, which alarm will continue to operate until the system is put into proper condition or the signal arranged to show the cause of the interruption; and means in connection with these features whereby in case of the use of the invention on a system having more than one unit or more than one way of rendering it unserviceable, an annunciator of an ordinary type can be employed to indicate either the location or cause of the interruption of service.

The invention also involves improvements in combinations of these various features and details of construction as will appear hereinafter.

Reference is to be had to the accompanying drawings in which—

Figure 1 is a front elevation of a display plate and its connected parts constituting a part of this system and also showing diagrammatically the electrical connections, the parts being indicated in their "safe" position; Fig. 2 is an enlarged detail view of a portion thereof in section; Fig. 3 is a view similar to Fig. 1 showing the parts in "danger" position, and Fig. 4 is a side view of a part of the device.

The invention is shown as applied to an automatic fire extinguishing system in which the main valve 10 for one of the units of the system is operated through its stem 11 by a wheel 12. Means are provided whereby when this valve is wide open a knife switch 13 shall be open so as to open one of a plurality of parallel electric circuits 14 and whereby whenever the valve stem is moved from its wide open position this knife switch will be forced positively to a closed position in which it shall complete that electric circuit 14, the results of which will appear hereinafter. For the purpose of operating this knife switch positively the valve stem 11 is shown as provided with a shallow depression 15 for receiving a plunger 16 which is movably mounted on the frame 17 which carries the knife switch. This plunger is set into a perforation in the base of this frame and is normally held down in the depression 15 by the usual compression spring 18 of the knife switch. For the purpose of insulating the plunger from the lever of the knife switch an insulating block 19 is inserted between the two as will be understood. The details of this switch are not described as any desired form can be employed. The casing, of course, is fixed to the valve casing 20 through which the valve stem passes. This is done by means of bolts 21 and a plate 22 on the back of the casing. It can be applied to any kind of valve casing. This circuit 14 when closed by the knife switch connects a battery 24 through the switch with one of the elements 25 of an annunciator 26 mounted on or above an insulating slab 27. This annunciator is of an ordinary type such, for example, as the Moltzep patent annunciator, and is provided with a plurality of units, each one controlled by a switch similar to the switch 13 or of any other desired kind. As a separate connection is made from each switch through one of the elements of the annunciator the annunciator always shows which switch has been closed. The other terminals

of all the elements of the annunciator are connected with a single main 30 which is connected with two wires in parallel. One of these wires 28 connects a visible signal, as for example an electric lamp 29 with the main 30. Parallel with the wire 28 is a wire 32 which connects with an electro-magnet 33, the other terminal of which is connected with the main 30 so that the lamp and magnet are parallel with each other and both operate together. Connected also with the common terminal of the annunciator and, preferably as shown, with the wire 28 is a wire 34 which passes to a pair of metallic conducting pivots 35 fixed on the slab 27. On each of these pivots is a spring 36 which operates on a lever 37 for the purpose of normally holding said lever in the position shown in Fig. 1. These two levers swing about the pivots and carry a display signal 38. This display signal is shown in the form of a large metallic plate provided on the side shown in Fig. 1 with a surface preferably having the word "Safe" or "Safety" thereon. Normally the springs 36 hold this plate in the position indicated in Fig. 1 and at that time it indicates that the sprinkler system is in proper working order. This signal can be turned over on its pivots 35 into contact with the armature of the electro-magnet 33, as shown in Figs. 3 and 4. From this position it is normally urged back to the safe position by the springs but if the electro-magnet 33 is excited its armature will hold this plate in this position by the action of its magnetism. It will be observed that on the back of this plate is the word "Danger" and also that it is provided with projections 40 on which, in case of repairs, a card 41 can be hung indicating the reason for the disturbance of the signal and preferably the date, duration of time during which the system is to be out of order, and such other instructions and information as may be desired. This card is filed for future reference, when the parts are restored to "safe" position. It will be noted that when the signal plate 38 is in the position shown in Fig. 1 the levers 37 come into contact with two metallic members 42 which are contact plates. These are connected by a wire 43 with one pole of a buzzer 44, the other pole of which is connected with the wire 30. The purpose of this arrangement is to provide for giving an audible alarm through the buzzer whenever one of the knife switches is closed provided the danger signal 38 remains in the "safe" position. Although I have shown two sets of these connections, it will be understood that this is merely for mechanical reasons, one set being sufficient for electrical purposes.

In use the system is operated in the following manner: Each of the annunciator elements 25 is provided with a number word, or other sign to show how it is controlled and what its operation means. These elements are connected with different sections of a sprinkler system so that the display of any signal by this annunciator shows which one of the valves of the sprinkler system so that the display of any signal by this annunciator shows which one of the valves of the sprinkler system is closed, and in which unit of the system the pressure of the water has dropped. In the present case it may be assumed that the first two elements are connected with knife switches operated by the valve stems of two sections of the system, while the other two are connected with the mechanism for showing a change of pressure in the same sections. Now with everything in proper condition the parts are in the position shown in Fig. 1. If one of the switches 13 closes for any reason a current is sent from the battery through the proper annunciator element and a signal is displayed there to show where the danger is. Furthermore, the lamp 29 is lighted and the magnet 33 energized, although the magnet will perform no function at this time. The buzzer 44 of course is also operated for the reason that the signal 38 is supposed to be in safe position. The light and buzzer will continue in operation until the trouble is corrected, but if instead of that the signal plate 38 is turned down to the danger position as shown in Fig. 3, where the magnet will hold it, the buzzer will stop. Nevertheless, the electric light continues to burn. If when the parts are in this position the knife switch which set them into operation should be opened, the current through the light and magnet of course will be interrupted and there will be nothing to hold the signal plate in its lowermost position so the springs 36 will force it back into safe position. On the way back, a trip 47 will restore the annunciator to normal condition and the apparatus will be ready for further operation. When it is desired to close a valve of the sprinkler system or to do any other thing which would cause a signal to be given, the party having authority to do this is obliged to go through the following operations in order to avoid the giving of any audible signal in the office: First, he must see that the signal plate 38 is turned down to the danger position and held there. While that is held in that position by hand he must close the valve, which is located at a distance, or perform such other distant operation as he may intend to perform for closing the circuit. This of course, will light the lamp and will cause the signal plate to be held down in danger position by magnetism. On account of the operation of the buzzer in case this exact sequence of operations is not carried out the turning off of the water or other

tampering with the system without notifying the office is rendered very difficult and as a matter of fact this requires at least two persons to perform these operations. This will be obvious from the fact that the signal plate 38 must be moved away from the contacts 34 before the system can be tampered with, and without ringing the buzzer, and must be kept away from the same until the switch 13 or 13ª is closed. One man must perform one of these operations and another, the other, and as a matter of fact, unless they can converse with each other directly a third person may have to be cognizant of these things in order that they may communicate with each other and the man moving the plate down indicate that fact to the party who is to open the valve which ordinarily is situated at a long distance from the office. In this way all tampering with the system without notifying the authorized person in the office is rendered much more difficult than under present conditions and the operation of the device controlled by the valve is absolutely positive, not even the pressure of the water being depended upon to control it.

The signal plate 38 is so located with respect to the operating knob 46 of the annunciator that when the signal returns to "safe" position from its "danger" position it will operate said knob and restore the annunciator to its ordinary position in which no indication is given by it. For this purpose the plate 38 is provided on the back thereof, as shown in Fig. 1, with a pivoted trip 47, and a light spring 48 is provided for holding the trip toward the front as shown in that figure. For operating the sign a lever 49 is provided having a finger hold at one end and engaging the trip 47 at the other. When the plate is moved from "safe" to "danger" position this trip is forced back by the lever 49 and allows the trip to pass the knob. When moving in the opposite direction the trip is caused to operate the knob positively and thus restore the annunciator to its normal condition.

The invention is also designed to be used for the purpose of showing reduction in pressure of the water in the system below the minimum required for proper operation. For this purpose the stand pipe is shown as connected by a pipe 50 with a casing 51 having a diaphragm 52 therein. The pressure in the stand pipe operates on said diaphragm to force it to the left in Fig. 1 in opposition to a spring 53 so adjusted that when the pressure in the stand pipe is reduced below a certain minimum, this spring will force the diaphragm over to the right and allow spring 54 to close the switch 13ª. In this way one of the circuits 14 can be closed and the necessary signal given.

Although I have illustrated and described certain details of construction of the mechanism and shown it as applied only to an automatic fire sprinkler system, I am aware of the fact that the details can be varied within wide limits and that the invention can be applied to many other kinds of systems without departing from the scope of the invention as expressed in the claims; therefore I do not wish to be limited in these respects, but

What I do claim is:—

1. In a supervisory alarm system, the combination of an apparatus, the condition of which is desired to be shown, with a visible signal adapted to be moved to two positions, in one indicating safety and in the other danger, means connected with said apparatus for holding the signal stationary in the "danger" position only after it is moved thereto, means whereby when said apparatus is restored to full working condition said signal will be released, and means whereby said signal will then be restored to full "safe" position and held there until moved into position to be affected by said holding means.

2. In a supervisory alarm system, the combination of an apparatus, the condition of which is desired to be shown, with a visible signal adapted to be put by hand into a condition indicating danger, means connected with said apparatus for keeping the signal in the "danger" condition when said apparatus is not in full working condition, means whereby when said apparatus is restored to working condition said signal will be restored to "safe" condition, and means whereby, when said apparatus is operated from said full working condition at a time when said signal is in the "safe" condition an audible signal will be given automatically.

3. In a supervisory alarm system, the combination of a sprinkler system, with a signal movable to two opposite positions, one to indicate safety and other danger, and means controlled by the sprinkler system for holding the signal in the danger position, said signal being entirely out of the control of said means at all times when the signal is in safe position.

4. In a supervisory alarm system, the combination of a sprinkler system, with an electric circuit having a switch therein, means for closing said switch, a signal movable to two positions, one to indicate safety and the other danger, means adapted to be operated when said circuit is closed for holding the signal in the danger position, and an alarm connected with said circuit and arranged to be operated when said switch is closed if the signal is in the safe position, but to be rendered inoperative when the signal is not in safe position.

5. In a supervisory alarm system, the com-

bination of a sprinkler system, with an electric circuit having a switch, means for closing said switch, a signal adapted to be in two conditions, one to indicate safety and the other danger, said signal being movable manually to the danger position, means adapted to be operated when said circuit is closed for keeping the signal in the danger condition, and means for preventing the signal from being moved from safe position except by external means.

6. In a supervisory alarm system, the combination of the main valve of a sprinkler system, with an electric circuit having a switch, means for closing said switch whenever the main valve moves from its wide-open position, a manually operable display signal adapted to be in two conditions, one to indicate safety and the other danger, means adapted to be operated when said circuit is closed for keeping the signal in the danger condition, and an alarm connected with said circuit and operated thereby when said switch is closed if the signal is in the safe condition.

7. In a supervisory alarm system, the combination of the main valve of a sprinkler system, with an electric circuit, means whereby said electric circuit will be closed whenever said main valve is moved even slightly from its full open position, a visible signal movable to two positions, in one indicating safety and the other danger, an electro-magnet in said circuit having its core in position to hold said signal in the danger position, a branch circuit adapted to be completed only by the movement of said signal to safe position, and an audible signal located in and operated by said branch circuit.

8. In a supervisory alarm system, the combination of the main valve of a sprinkler system, with an electric circuit, means whereby said electric circuit will be closed whenever said valve is moved away from its full open position, a visible signal movable to two positions, a safe position and a danger position, an electro-magnet in series with said circuit having means connected therewith for holding the visible signal in its danger position, an audible signal connected with said circuit, means whereby said audible signal is disconnected from said circuit whenever the visible signal is moved away from its safe position, and a second visible signal located in said circuit parallel with the electro-magnet.

9. In a supervisory alarm system, the combination with an electric annunciator and a series of parallel circuits connected therewith, each having a switch therein, means for automatically closing one of said switches when a signal on that circuit is to be given, an electro-magnet in series with all of said circuits and adapted to be excited when any one of said switches is closed, a signal movable to two opposite positions parallel with each other indicating respectively safety and danger, said electro-magnet having means for holding the movable signal in its danger position, and means for restoring said annunciator to normal condition when the signal returns to safe position.

10. In a supervisory alarm system, the combination with an electric annunciator and a series of parallel circuits connected therewith, each having a switch therein, means for automatically closing one of said switches when a signal on that circuit is to be given, an electro-magnet in series with all of said circuits and adapted to be excited when any one of said switches is closed, a signal movable to two positions indicating respectively safety and danger, said electro-magnet having means for holding the movable signal in its danger position, a branch circuit connected in series with the first named circuits when the movable signal is in safe position and disconnected therefrom when the movable signal is not in safe position, and an audible signal located in said branch circuit whereby said audible signal will be operated whenever any one of said switches is operated if the movable signal is in safe position.

11. The combination with an annunciator and a plurality of parallel circuits connected therewith, of a manually operable arm, a signal mounted on said arm and movable therewith to two positions in the same plane, said arm being connected in series with said parallel circuits, a contact in position to be engaged by said arm when the signal is in normal safe position, a branch circuit connected with said contact and having a buzzer therein, said buzzer being connected with the other terminal of the parallel circuits, whereby an alarm will be given whenever one of said circuits is opened and until the arm and signal are moved from the normal safe position.

12. The combination with an annunciator and a plurality of parallel circuits connected therewith each having a switch therein adapted to be closed for closing said circuits and operating the respective elements of the annunciator, of a pivoted arm, a signal mounted on said arm and adapted to swing therewith through a half circle to two positions, said arm being connected in series with said parallel circuits, a contact in position to be engaged by said arm when the signal is in one position, a branch circuit connected with said contact and having a buzzer therein, said buzzer being connected with the other terminal of the parallel circuits, and an electro-magnet in series

with said parallel circuits for holding said signal in a position in which the arm is out of engagement with said contact.

13. The combination with an annunciator and a plurality of circuits connected therewith, for operating the respective elements of the annunciator, of a pair of arms, a signal mounted on said arms and movable therewith to two positions, said arms being connected with said circuits, a contact in position to be engaged by one of said arms when the signal is in normal safe position, a buzzer connected with the contact to be operated when the contact is closed, an electromagnet connected with said circuits for holding said signal in a position in which the arm is out of engagement with said contact, and yielding means for normally moving said signal into said normal safe position in which the arm engages said contact.

14. The combination with a circuit having a switch therein, of a manually movable pivoted arm, a signal mounted on said arm and movable therewith to two opposite positions, in the same plane, said arm being connected in series with said circuit, a contact in position to be engaged by said arm when the signal is in one position, a branch circuit connected with said contact and having a buzzer therein, said buzzer being connected with the other terminal of the first named circuit, and an electro-magnet in series with said first named circuit for holding said signal in a position to prevent the operation of the buzzer when the signal is under the control of the electromagnet.

15. The combination with a circuit having a switch therein, of a pivoted arm, a signal mounted on said arm and movable therewith to two positions, said arm being connected in series with said circuit, a contact in position to be engaged by said arm when the signal is in one position, a branch circuit connected with said contact and having a buzzer therein, said buzzer being connected with the other terminal of the first named circuit, an electro-magnet in series with said first named circuit for holding said signal in a position in which the arm is out of engagement with said contact, and yielding means for normally and automatically moving said signal into a position in which it is entirely out of the field of said electromagnet and the arm engages said contact when the electromagnet is not excited.

16. In a supervisory alarm system, the combination with an electric annunciator and parallel circuits connected therewith, each having a switch therein, means for closing one of said switches to operate a unit of the annunciator, a signal movable to two positions indicating respectively safety and danger, and means whereby when said signal is moved to its safe position it will restore the annunciator to its normal condition.

17. In a supervisory alarm system, the combination with an electric annunciator and parallel circuits connected therewith, each having a switch therein, means for closing one of said switches to connect a unit of the annunciator with the power, a signal movable to two positions indicating respectively safety and danger, and means whereby when said signal is moved to its safe position it will restore the annunciator to its normal condition, and whereby when moved from safe to the danger position, said signal will not operate the annunciator.

18. In a supervisory alarm system, the combination with a stand pipe for a sprinkler system and a valve therefor, of a signal movable to two positions for indicating safety and danger respectively, an alarm, electrical connections for releasing said signal from the safe position and allowing it to move to danger position and for causing said alarm to sound, and means connected with said valve for closing said electrical connections when the valve moves from its fully open position.

19. The combination with a valve, of an electrically operated movable signal for indicating by its position when the valve is fully open, and means for sounding an alarm when said valve is moved away from fully open position.

In testimony whereof I have hereunto set my hand, in the presence of two subscribing witnesses.

GEORGE I. ROCKWOOD.

Witnesses:
ALBERT E. FAY,
C. FORREST WESSON.

Copies of this patent may be obtained for five cents each, by addressing the "Commissioner of Patents, Washington, D. C."