Nov. 6, 1951 S. C. BENJAMIN ET AL 2,573,888

BEVERAGE DISPENSING APPARATUS

Filed July 29, 1947 2 SHEETS—SHEET 1

Fig. 1.

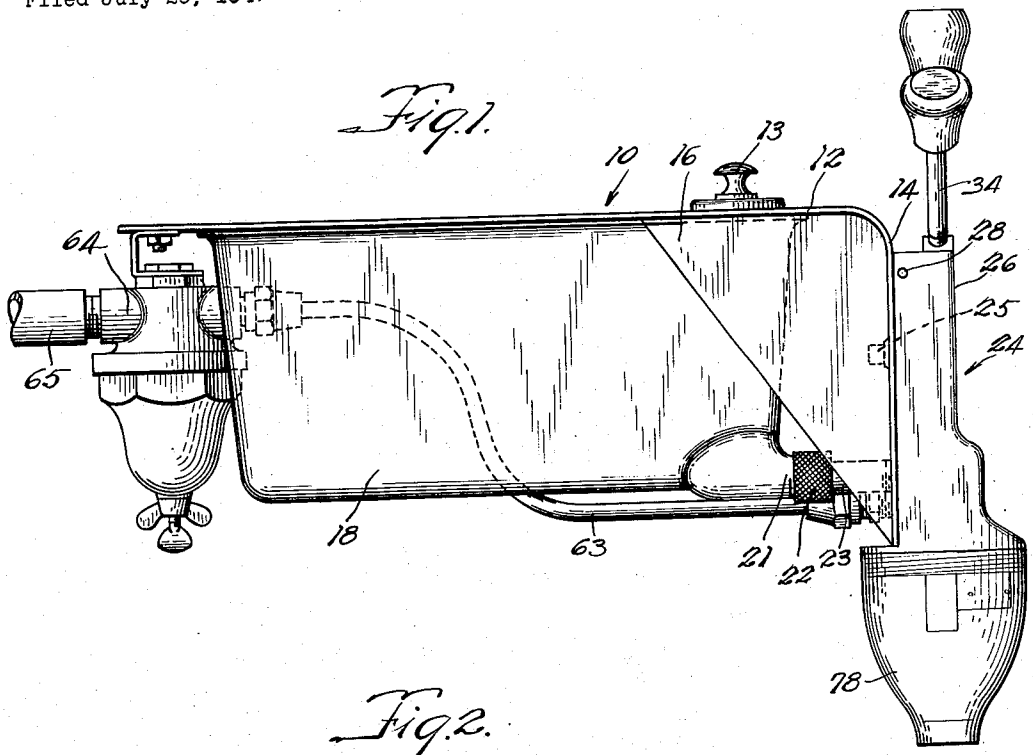

Fig. 2.

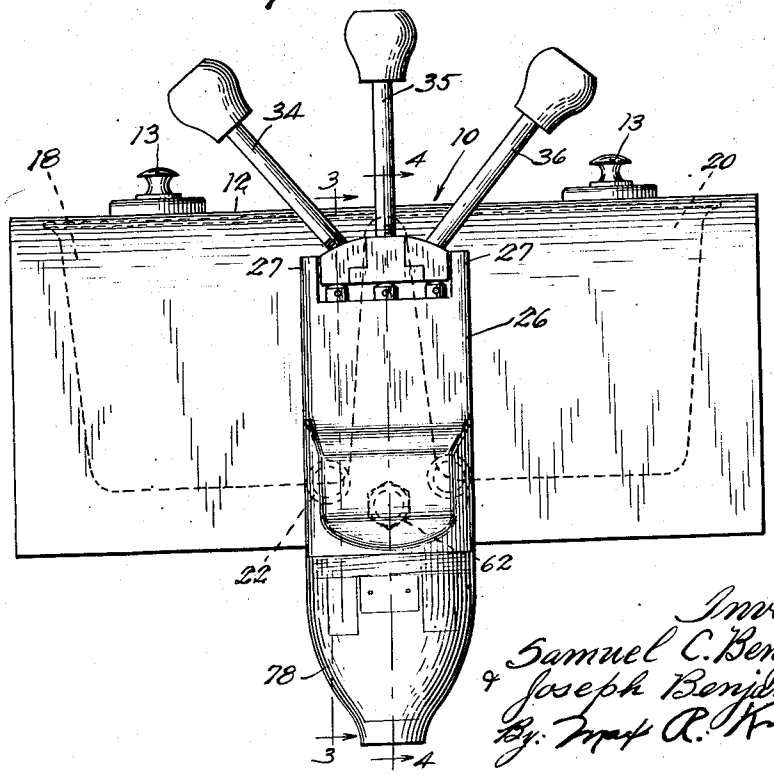

Inventors.
Samuel C. Benjamin
& Joseph Benjamin.
By: Max R. Kraus
Atty.

Nov. 6, 1951 S. C. BENJAMIN ET AL 2,573,888

BEVERAGE DISPENSING APPARATUS

Filed July 29, 1947 2 SHEETS—SHEET 2

Fig. 3.

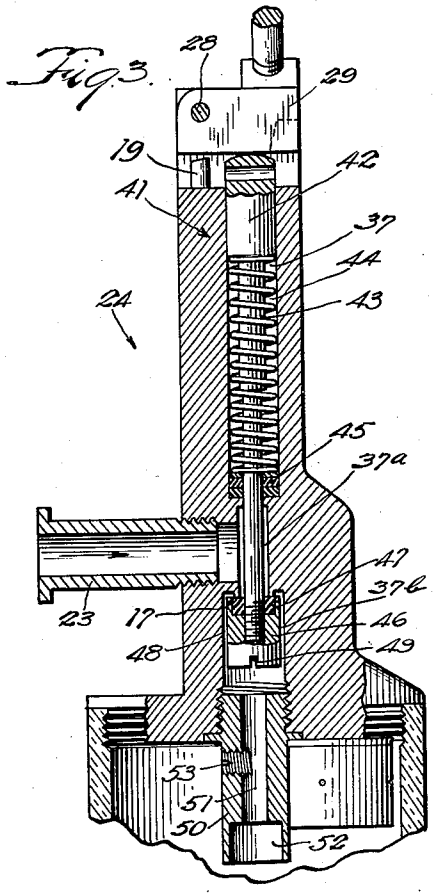

Fig. 4.

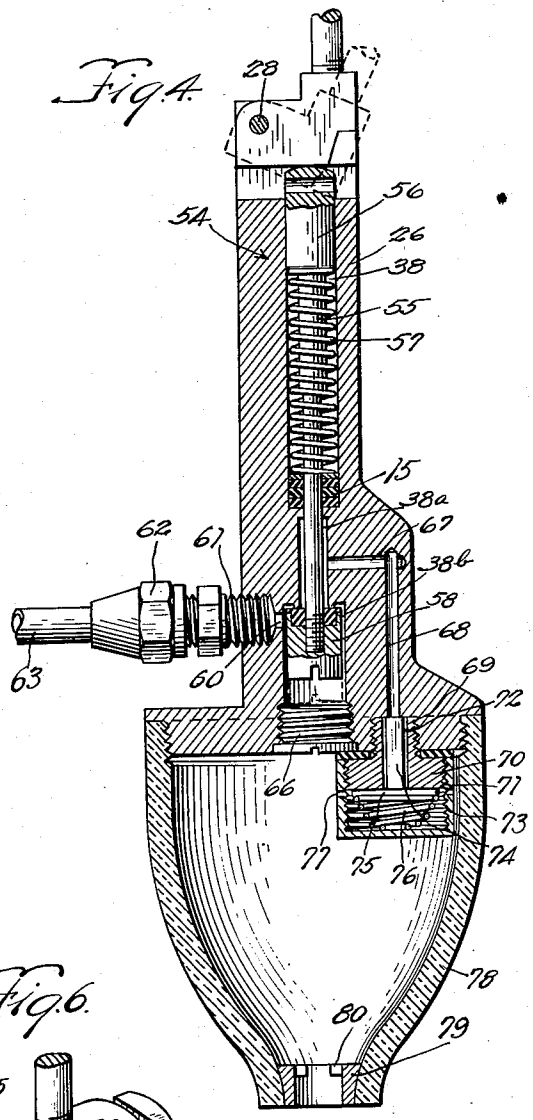

Fig. 5.

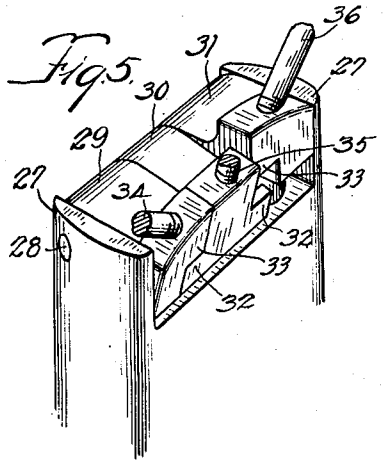

Fig. 6.

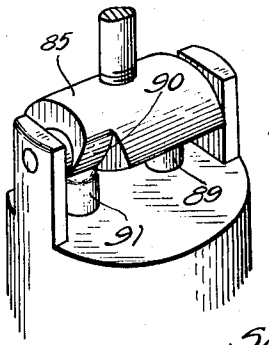

Fig. 7.

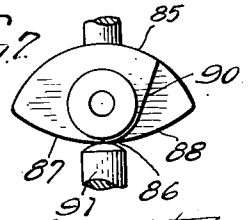

Inventors:
Samuel C. Benjamin
& Joseph Benjamin.
By: Mapp & Kraus
Attys.

Patented Nov. 6, 1951 2,573,888

UNITED STATES PATENT OFFICE

2,573,888

BEVERAGE DISPENSING APPARATUS

Samuel C. Benjamin and Joseph Benjamin,
Chicago, Ill.

Application July 29, 1947, Serial No. 764,496

9 Claims. (Cl. 225—21)

1

This invention relates to a beverage dispensing apparatus and to an improved faucet therefore.

One of the objects of this invention is to provide an improved mechanism for actuating the valves.

Another object is to provide an improved faucet to be selectively operated to discharge a single liquid such as charged water, or to mix and dispense a plurality of liquid ingredients simultaneously, such as a syrup and charged water, both drawn from independent supply sources.

Another object is to provide an improved dispensing apparatus having a faucet which is selectively operated to dispense a liquid such as charged water alone or in combination with one of two other liquids such as syrups.

Another object is to provide an improved faucet having a nozzle which will cut off the flow of the liquid, such as syrup, immediately upon release of the actuating member, and eliminate dripping of the liquid from the nozzle, and adjustable means to vary the flow of the liquid from said nozzle.

Another object is to provide an improved nozzle for dispensing charged water, for varying the flow of the liquid, for reducing the globules of the charged gas so that when the charged water and syrup are mixed they will be churned and thoroughly intermixed.

Another object is to provide a faucet for simultaneously dispensing charged water and a syrup, with the charged water continuing to flow slightly longer than the syrup.

Another object is to provide a faucet wherein correct proportional amounts of syrup and charged water are intermixed in each operation and which is adjustable so that the relative proportions can be varied as desired.

Another object is to provide a syrup faucet which eliminates the dripping of the syrup after the faucet has been closed, and enables clear charged water to be immediately dispensed from the charged water faucet into a drinking tumbler, without any of the syrup dripping therein and discoloring the charged water.

In the drawings:

Fig. 1 is a side elevational view of the dispenser.

Fig. 2 is a front elevational view of same.

Fig. 3 is a cross sectional view of the handle and valve mechanism taken on line 3—3 of Fig. 2 and showing the syrup control mechanism.

Fig. 4 is a cross sectional view taken on line 4—4 of Fig. 2 showing the water control mechanism.

2

Fig. 5 is a perspective view of the handle operating parts.

Fig. 6 is a perspective view of a modified form of handle operating parts, and

Fig. 7 is a side elevational view of Fig. 6.

The unit comprises a support member 10, having a top 12 and front wall 14 connected and reinforced by side members 16. Supported inside of the support are a pair of syrup or flavor containing receptacles 18 and 20, and each has a threaded tube portion 21 which is connected by a coupling member 22 to the tubular conduit 23, in turn threadedly secured to the dispensing faucet, generally indicated at 24, and forming a passageway for the syrup from the receptacles to the faucet. Both receptacles are similarly connected on the opposite sides of the faucet and by gravity feed the syrup to said faucet. The top 12 has a pair of openings 11, one over each of the receptacles through which the syrup is poured. Removable covers 13 cover the openings.

The dispensing faucet 24 is anchored by bolts and nuts 25 to the front wall 14. The dispensing faucet comprises a main body portion 26, formed preferably of a single or solid piece of metal, having a pair of sides 27 extending upwardly beyond the top of the body portion and between which are rockably mounted on a pin 28 the three actuating members 29, 30 and 31, best shown in Fig. 5. The center member 30 has oppositely extending lips 32 which form an inverted T shape when viewed from the front. The members 29 and 31 each have a right angled cut-out or recess 33 shaped complementally to the lips 32 and the members 29 and 31 rest on said lips. A handle is threadedly secured to each of the three actuating members as indicated by the numerals 34, 35 and 36. On the body portion 26 and to the rear of each of the actuating members 29 and 31 is a stationary pin 19 which limits the rearward pivoting of the actuating members.

The main body portion 26 has three vertical bores indicated at 37, 38 and a bore not indicated but identical to bore 37, and each supports therewithin similar valve operating mechanism. The two outside bores 37 and the identical one not indicated house the syrup control valves and operating mechanism, and the center bore 38 the charged water control valve and operating mechanism. The bore 37 communicates with a reduced bore 37a and an enlarged bore 37b. In the bore 37 there is the valve operating mechanism, generally indicated at 41, which has a head 42 having a sliding fit with the bore 37, and a stem 43 which extends through the bore 37a and into

the bore 37b. A coil spring 44 encompassing the stem 43 has one end resting against the under side of the head 42 and its opposite end resting on several rubber washers with the top one of metal, generally indicated by the numeral 45, positioned on the bottom of the bore 37. The lower end of the stem is threaded and has secured thereon an adjustable valve 46 which has an annular recess at the top thereof to receive a rubber washer 47. The top of the bore is formed to provide a raised annular surface 17 against which the washer 47 seats to provide a seal tight fit for the valve 46. The valve has a smaller diameter than the bore 37b to provide space or passageway 48 therebetween for passage of the syrup, to be described. The valve 46 has a slot 49 for engagement by a screwdriver for adjusting the valve and stem.

The lower portion of the bore 37b is threaded to receive a tubular non-drip nozzle 50, having a bore 51 and an enlarged lower bore 52. An adjustable needle valve 53 is transversely positioned with respect to the bore and is spaced from the bottom of the nozzle to permit the proper flow of syrup. The two syrup control mechanisms positioned on the opposite sides are identical in construction and operation.

The valve mechanism for controlling the dispensing of the charged water is shown in Fig. 4 and is substantially similar to the syrup faucet valve mechanism 41. The bore 38 communicates with a reduced bore 38a and an enlarged bore 38b. The valve operating mechanism, generally indicated at 54, includes a valve stem 55 having a head 56 which slides in the bore 38 and is held in its raised position by a coil spring 57 which rests on washers 15, greater in number than the washers 45, to provide more tension for the spring and provide a slightly delayed closing action for the valve 58 with respect to the valve 46. The stem supports a valve 58 which is adjustable and a washer 59 which seats against the raised surface 19 to provide a seal tight fit, similar to the syrup control valve.

Communicating with the bore 38b is a transverse opening 60 internally threaded to receive a threaded pipe 61 which is connected by a coupling member 62 to a conduit 63, in turn connected to a reduction valve 64. Connected to the other end of the reduction valve is a conduit 65 leading from a tank of charged water or other water (not shown). A threaded plug 66 closes the bottom of the bore 38b. The reduction valve acts to reduce the pressure from between 180 and 120 lbs. to 90 lbs. Communicating with the vertical bore 38a is a horizontal bore or passageway 67 which communicates with a vertical passageway 68 having an enlarged internally threaded portion 69, to which is threaded a valve body 70 having an externally threaded portion 71 and an internal bore 72. Threadedly secured to said valve body is a hollow cap 73. Fitting within the bore 72 is the stem portion 74 of the valve 75. A spring 76 is interposed between the valve head and the bottom of the cap to seat the valve head and urge it against the valve body 73, to close the bore 72. The cap 73 has a plurality of small apertures 77 spaced around the cap through which the charged water is dispensed. As will be clearly seen in Fig. 2, the water discharge member is positioned between the two syrup outlets.

A nozzle 78 is threadedly secured to the base of the main body 26 and serves as a mixing chamber when syrup and water are simultaneously discharged. The lower end of the nozzle is constricted and supports a ring 79, having a plurality of inwardly directed projections or teeth 80 which direct the stream in a straight line.

The operation of this construction will now be described.

When the center handle 35 is moved forwardly, the actuating member 30 will pivot forwardly on the pin 28 engaging the head 56 and depressing the valve stem 55. The two actuating members 29 and 31 will not be effected but will remain in their normal elevated position. When the valve stem 55 is depressed, the valve 58 is moved downwardly, opening the entrance to the bore 38a and allowing the charged water to pass under pressure from the opening 60 into the bore 38b, through the vertical bore 38a, the horizontal bore 67, and down the vertical bore 68. The pressure will cause the stem 74 to move downwardly unseating the valve 75 and opening the entrance into bore 72, and the water will pass around the stem 74, around the valve head 75 and into the hollow cap 73 and through the port openings 77 into the mixing chamber 78 and through the nozzle 80. When the hand is removed from the handle 35, the spring 57 will move the valve stem 55 back to its original position, and the actuating member 30 will likewise be pivoted back to its original position.

Adjustment of the cap 73 with respect to the valve body 70 will determine the rate of flow as well as the size of spray of the charged water. With the cap screwed in to its limit, as shown in Fig. 4, the spring 76 holds the valve head 75 tightly under pressure against the underside of the valve body 70. As the charged water moves to unseat the valve head 75, a homogenizing action takes place as the water passes from between the bottom of the valve body and the valve head, reducing the size of the globules of the CO_2 gas to smaller dimensions, as well as restricting or retarding the rate of flow of the water. The charged water passing through the ports 77 in the form of a fine spray or stream which mixes with the syrup from the nozzle 50 in the mixing chamber 78, churns it up to get an even flavor throughout as it leaves the nozzle 80. By unscrewing the cap somewhat from that shown in Fig. 4 and reducing the pressure on the valve 75, the rate of flow of the charged water is increased as is also the size of the globules of the CO_2 gas. This cap can be adjusted with respect to the valve head 48, to determine the proper quantity of syrup with respect to charged water.

If it is desired to dispense one of the syrups simultaneously with the charged water, then either one of the handles 34 or 36 (dependent on the syrup desired) is moved forwardly. Assuming the handle 34 is moved, the actuating member 29 is pivoted forwardly, and being in engagement with the lip 32 of the member 30, will simultaneously pivot the center actuating member 30 downwardly, causing both valve stems 43 and 55 to be simultaneously depressed. With a depression of the valve stem 55, the action previously described takes place. As the valve stem 43 is depressed, moving the valve 46 away from the top of the bore 37b, the syrup in the container 18 (or 20) will flow by gravity from the syrup container through the conduit 23 into the bore 37a, and through the space 48 around the valve 46 and down past the needle valve 53 and through the non-drip nozzle 50 into the mixing chamber 78, where it is mixed with the charged water simultaneously coming from the apertures 77, and

it thence flows out through the nozzle opening 79. In releasing the syrup control handle 34 (or handle 36), the valve stem 43 will be urged upwardly by the spring 44, and the actuating member 29 (or 31) will pivot back and simultaneously therewith so will the actuating member 30, cutting off the flow of syrup and charged water. However, due to the difference of the spring pressure between the springs 44 and 57 because of the difference in the number of washers, the valve 46 will be actuated to closing position prior to the closing of the valve 58, thus closing the flow of syrup prior to the closing of the charged water and permitting the charged water to flow slightly longer than the syrup, cleaning out any syrup that might be in the mixing chamber.

The needle valve 53 is adjustable to regulate the flow of the syrup and is adjustable with respect to the valve 75 to determine the amount and quantity of syrup with respect to charged water to be dispensed. The needle valve 53 is spaced from the bottom of the bore 51 so that as the flow of the syrup is interrupted by the needle valve, the flow will right itself before it leaves the bore 51. The end of the nozzle represented by the bore section 52 acts as a shield for the flow of the syrup coming from the nozzle and serves to maintain the vacuum in the syrup nozzle. The action is as follows: When the valve head 42 moves upwardly after the handle has been released, pulling up the valve 46, it causes a suction in the bore 37b and creates a vacuum therein, and any syrup in the bore 51 will be trapped and held as a mass in bore 51 by this vacuum, thereby eliminating any dripping of the syrup when the handle is operated to cut the flow of syrup. When the handle is again operated and the valve 46 is unseated, the vacuum is broken and the syrup trapped in the bore will discharge into the mixing chamber and the flow will continue from the syrup receptacle by gravity.

In Figs. 6 and 7 are shown modifications of a handle operating mechanism which is constructed to control the flow of one syrup in combination with charged water or charged water alone. The valve operating mechanism and other parts are identical in construction and operation to that described in connection with the syrup and charged water control members. In this modified construction however, there would be only one valve mechanism like that designated generally by the numeral 41 for controlling the syrup and one for controlling the discharge of water, like that designated generally by the numeral 54, hence only the construction of the actuating members will be described.

The actuating member 85 is shaped to provide cammed or off center surfaces 87 and 88 on both sides of the center 86, so that the valve operating member 89, which controls the flow of charged water, is depressed when the actuating member is rocked either forwardly or rearwardly. A cutout 90 is provided so that the syrup control member 91 is not engaged or actuated when the actuating member is moved forwardly, but will be engaged and depressed when the actuating member is rocked rearwardly. Thus the following action ensues. When the handle is moved forwardly, charged water is dispensed, when moved rearwardly charged water and syrup is dispensed.

We claim:

1. A beverage dispensing faucet comprising a pair of syrup control valves and a charged water control valve, an actuating member for each of said valves the outside actuating members each operating a syrup control valve, the center actuating member operating said water control valve and having a pair of lips, the outside actuating members having recesses for said lips so that when the center actuating member is operated it will only operate the water control valve, and when either one of said outside actuating members are operated they will simultaneously operate the center actuating member.

2. A dispensing device comprising a plurality of actuating members, one operating a charged water control mechanism, the other a syrup control mechanism simultaneously with said charged water control mechanism, a syrup dispensing nozzle, means for creating a vacuum in said nozzle and suspending or trapping the syrup in said nozzle.

3. A dispensing device comprising a syrup control valve, an actuating member for operating said syrup control valve to control the flow of the syrup, a nozzle below said valve and adapted when said valve is closed to contain a vacuum therein to suspend in mass the liquid between the end of the nozzle and the valve.

4. A dispensing device comprising a plurality of actuating members, a charged water control valve and a syrup control valve operated by said members, a non-drip nozzle on the end of said syrup control valve and adapted to prevent the dripping of the liquid after the valve is closed, a dispensing outlet for said charged water control valve, said outlet including an adjustable cap with a plurality of apertures, a valve operable in said cap and adapted to control the flow of the fluid into said cap, and a mixng chamber for receiving the fluids from each of said valves.

5. In a dispensing device comprising an actuating member, a syrup discharge control valve and a water discharge control valve, said actuating member when moved in one direction operating said water discharge control valve and when moved in the opposite direction operating said syrup and water discharge control valves simultaneously, a syrup dispensing nozzle, means for creating a vacuum in said nozzle and suspending the syrup in said nozzle.

6. A beverage dispensing faucet comprising a syrup control valve and a charged water control valve, means for actuating said charged water control valve individually and for actuating said valve simultaneously with said syrup control valve, a syrup dispensing nozzle, means for creating a vacuum in said nozzle and suspending the syrup in said nozzle.

7. A dispensing faucet for charged water comprising a valve, means for actuating said valve, another valve unit comprising a valve body, a valve head, an adjustable cap, and a spring interposed between the valve head and cap to maintain the valve head under pressure against the valve body, the charged water passing through said first mentioned valve causing the said valve head to move away from said valve body, said water being homogenized as it passes between the valve body and valve head, said homogenized water passing through openings in said cap.

8. A dispensing unit for dispensing syrup and charged water comprising an actuating member for simultaneously operating syrup and charged water control mechanism, said syrup control mechanism including a valve member, a nozzle extending downwardly therefrom and communi-

cating with a mixing chamber, said charged water control mechanism also dispensing charged water into said mixing chamber to be mixed with said syrup, said actuating member when operated to closing position, first closing the syrup control valve and producing a vacuum in said nozzle to trap the syrup therein and stop the flow thereof, the charged water control valve closing subsequently and permitting the charged water to continue to flow slightly longer than the flow of the syrup and cleaning out any syrup in the mixing chamber.

9. A syrup dispensing faucet including a bore, a valve stem having a head slideable in said bore, means for actuating said valve stem, a valve on the opposite end of said stem, a nozzle for the passage of the syrup, an adjustable needle valve spaced from the bottom of said nozzle to regulate and to right the flow of the syrup, said nozzle having a vacuum created therein when said valve is closed to trap the syrup in said nozzle.

SAMUEL C. BENJAMIN.
JOSEPH BENJAMIN.

REFERENCES CITED

The following references are of record in the file of this patent:

UNITED STATES PATENTS

Number	Name	Date
1,196,520	Chadwick	Aug. 29, 1916
1,225,650	Koenig	Feb. 10, 1925
1,592,744	Popendry	July 13, 1926
1,603,082	Jacobs	Oct. 12, 1926
2,160,983	Painter	June 6, 1939
2,371,432	De Pietro	Mar. 13, 1945
2,415,571	Yuza	Feb. 11, 1947

FOREIGN PATENTS

Number	Country	Date
197,136	Great Britain	May 10, 1923