April 20, 1937. S. SVENSON 2,077,724

STAMPING MACHINE

Filed Feb. 3, 1936 3 Sheets-Sheet 1

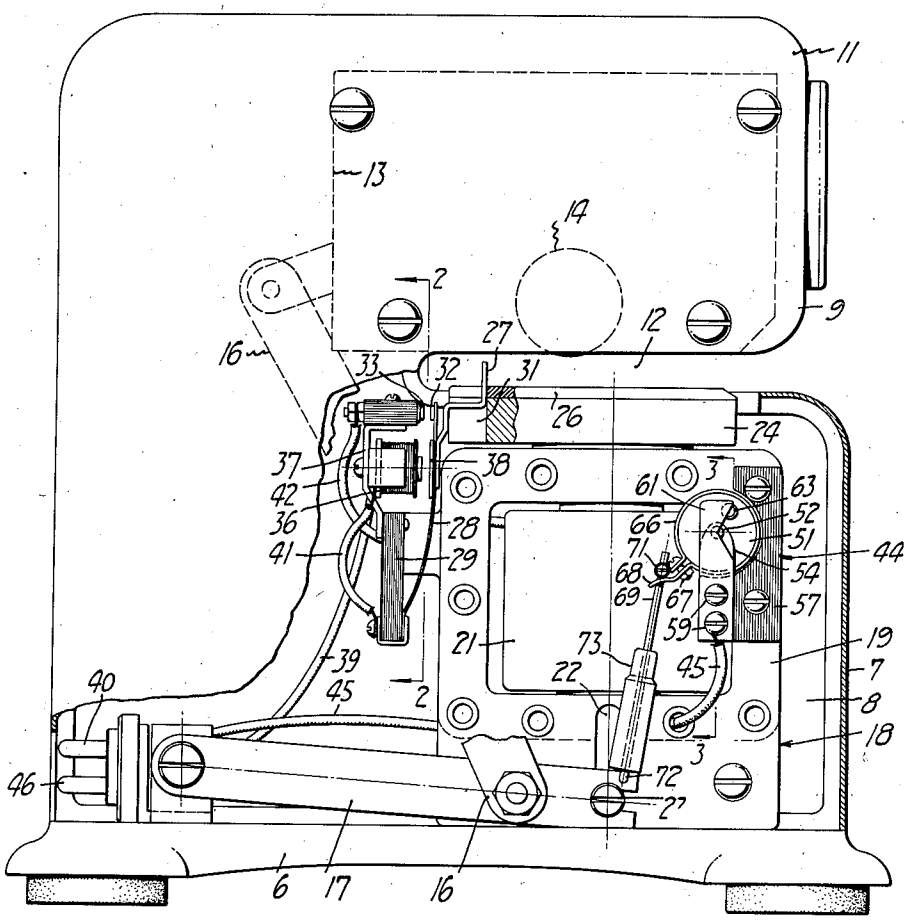

FIG_1_

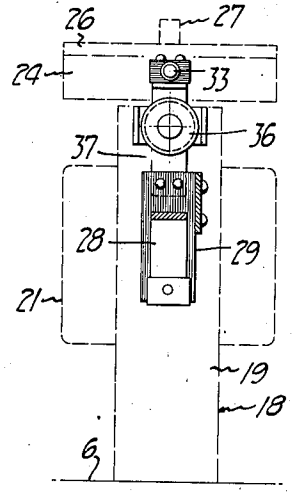

FIG_2_

INVENTOR.
Sven Svenson
BY
ATTORNEY.

April 20, 1937. S. SVENSON 2,077,724

STAMPING MACHINE

Filed Feb. 3, 1936 3 Sheets-Sheet 2

FIG. 3

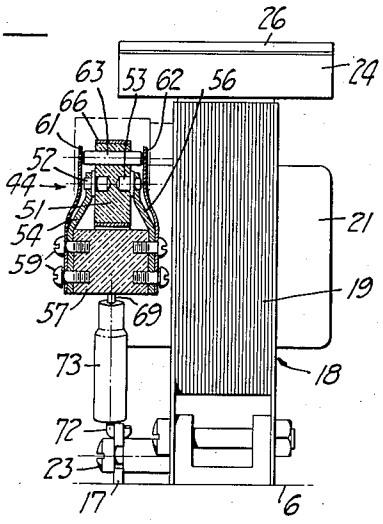

FIG. 4

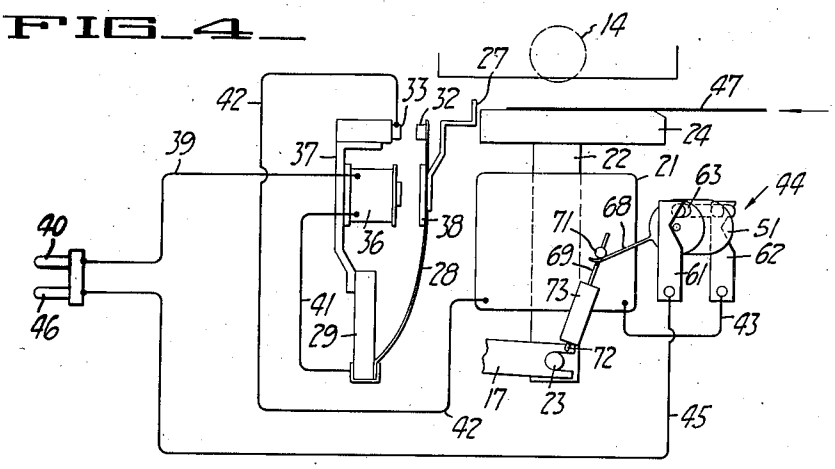

INVENTOR.
Sven Svenson
BY
ATTORNEY.

April 20, 1937. S. SVENSON 2,077,724

STAMPING MACHINE

Filed Feb. 3, 1936 3 Sheets-Sheet 3

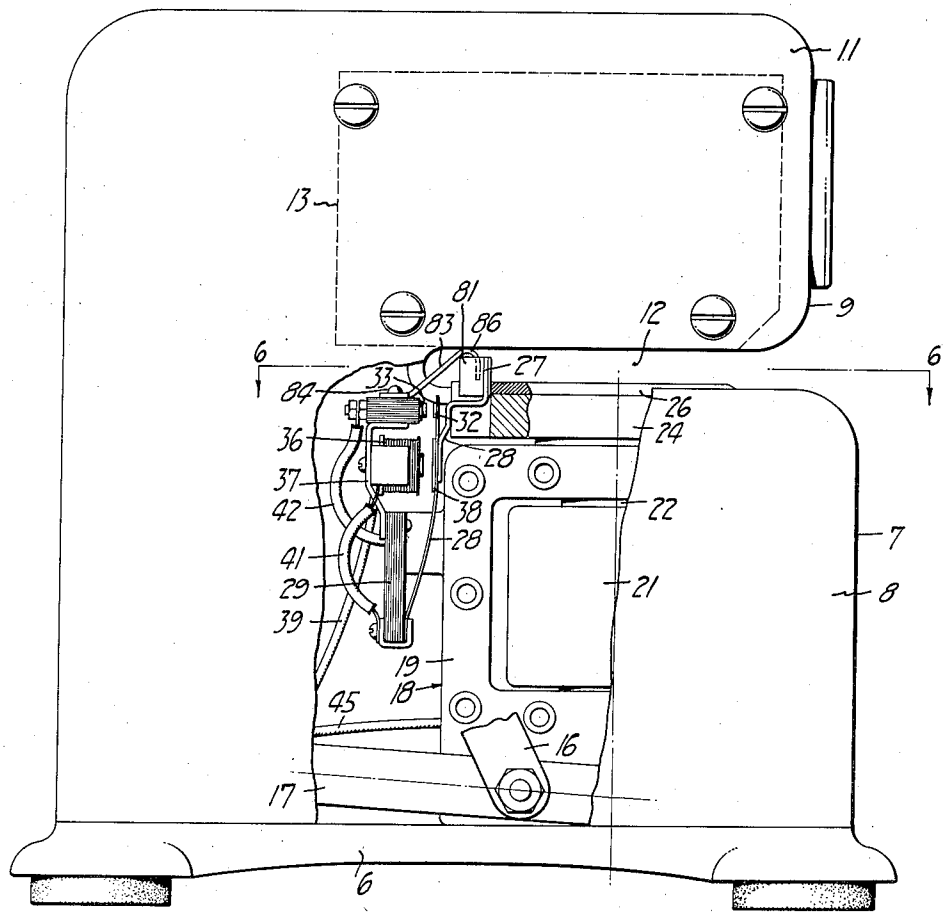

FIG. 5.

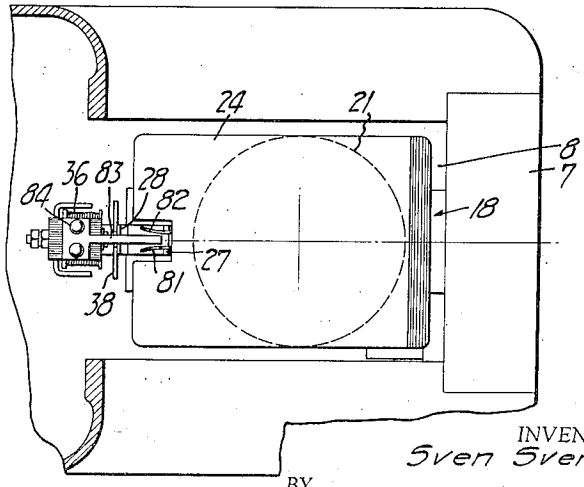

FIG. 6.

INVENTOR.
Sven Svenson

BY

ATTORNEY.

Patented Apr. 20, 1937 2,077,724

UNITED STATES PATENT OFFICE

2,077,724

STAMPING MACHINE

Sven Svenson, San Francisco, Calif.

Application February 3, 1936, Serial No. 62,131

8 Claims. (Cl. 101—287)

My invention relates to machines for acting upon one or a group of inserted sheets and is characterized by a pair of relatively movable members which can be included in a stapling machine, in an eyeleting machine, or in a seal, time stamp or comparable device, and for convenience herein I refer to all structures of this general character as stamping machines. The mechanism is related to that shown in my Patent No. 1,940,980, issued December 26, 1933.

An object of my invention is to provide a stamping machine in which the stamping action will be uniform despite thickness variations in the material or sheets being stamped.

Another object of my invention is to provide a stamping machine which is controlled by a sheet to be stamped and in which but a single stamping impression is made for a single insertion of the sheet.

An additional object of my invention is to provide a stamping machine having a variable stroke in which the driving mechanism is uniformly energized.

The foregoing and other objects are attained in the embodiments of the invention illustrated in the drawings, in which—

Fig. 1 is a side elevation of a stamping machine constructed in accordance with my invention, the lower portion of the machine being broken away and showing interior parts in side elevation and in cross-section.

Fig. 2 is a cross-section the plane of which is indicated by the line 2—2 of Fig. 1.

Fig. 3 is a cross-section the plane of which is indicated by the line 3—3 of Fig. 1.

Fig. 4 is a schematic view showing the wiring diagram of the mechanism.

Fig. 5 is a view similar to Fig. 1, showing a modified form of stamping machine.

Fig. 6 is a cross-section the plane of which is indicated by the line 6—6 of Fig. 5.

In its preferred form the stamping machine of my invention includes electrical stamp actuating means which are initially energized by the positioning in the machine of a sheet to be stamped and which are maintained in energized condition until the cycle of stamping is substantially completed whereupon de-energization is uniform and independent of the character of the stamping operation.

In the form of the invention disclosed in Figs. 1 to 4 inclusive, the stamping machine of my invention incorporates a base 6 supporting a lower housing 7 enclosing a lower chamber 8, and an upper housing 9 enclosing an upper chamber 11. Between the two housings is defined a slot 12 into which a sheet or sheets to be stamped may be introduced. In this example a printing mechanism 13 incorporating printing wheels 14 is included in the upper chamber 11 and is connected by a link 16 to an operating lever 17 in the lower chamber 8.

The mechanism 13 is comparable to that shown in Friden Patent No. 2,019,301, issued October 29, 1935. While this mechanism is primarily a time stamping device, comparable mechanisms can be substituted therefor with only minor changes in the described machinery. The wheels 14 are preferably serial number wheels which are advanced one step for each insertion of a sheet, so that it is important that there be no repetitive stamping for a single sheet insertion.

The stamping or impression is effected and the serial numbering mechanism is operated by means of an electromagnet or solenoid 18 which preferably includes a core frame 19 within which is mounted a coil 21. Reciprocable within the coil 21 is an armature 22, at its lower end fastened by a pin 23 to the slotted extremity of the operating lever 17, and at its upper end carrying a platen 24 with a resilient face 26 adapted to abut the numeral wheels or printing die 14.

When a sheet is introduced into the slot 12, the advancing edge of the sheet contacts the upper extremity 27 of a spring lever 28 mounted on an insulating block 29 fastened to the core frame 19. This lever extends through a notch 31 in the platen 24 and is advanced ahead of the introduced sheet until such time as an electric contact 32 abuts an electric contact 33, thereby closing a circuit including the coil 21. The coil is thus energized, quickly lifting the platen 24 and also the operating lever 17. As the platen lifts, it raises the inserted sheet to a position above the extension 27 of the lever 28, permitting the lever by its natural resiliency to return to a contact-open position, thereby de-energizing the coil 21. The parts then return to their initial position either by gravity or with the assistance of a spring, during which return the serial number wheels 14 are advanced one step by a ratchet mechanism (not shown).

It has been found in practice with the mechanism as so far described that it is possible for the contacts 32 and 33 to abut a plurality of times for a single insertion of a sheet so that a multiplicity of impressions or a weak impression results, or that if the thickness of the inserted sheet varies a great deal in successive insertions,

making and breaking of the circuit and the cycle of operation will vary materially.

To preclude these difficulties I have, in accordance with my invention, introduced special means for establishing and maintaining uniformity and precision of operation. In order that when the contacts 32 and 33 are once closed they will remain closed until a definitely fixed point in the cycle of operation, I preferably provide means for holding them in such position or for conditioning the circuit to remain closed once it has been energized, and consequently mount a holding coil 36 on a bracket 37 extending from the block 29. The coil is effective upon an armature 38 on the lever 23 and is energized as soon as the contacts 32 and 33 are placed in abutment. This is effected by having a conductor 38, from a terminal 39 connected to the source of electricity, extend to the holding coil 36, from whence the circuit extends through a lead 41 to the conducting lever 23 and thence to the contact 32. From the contact 33 a wire 42 extends to the coil 21, from whence the circuit extends through a wire 43 to a switching mechanism generally designated 44. A lead 45 extends therefrom to a remaining terminal 46.

With this arrangement, as soon as a sheet 47, for example, forces the contacts 32 and 33 into abutment, the circuit through the holding coil 36 is energized, and such coil acts as a magnet against the armature 38 and holds the contacts 32 and 33 in abutment. Even though the platen 24 rises and lifts the sheet 47 from the extension 27, the natural resilience of the lever 28 is ineffective to overcome the pull of the holding coil 36, the circuit remains closed, and the platen, unless some other effect occurs, will remain in its uppermost or stamping position. In this way the sheet 47 is held or gripped and cannot inadvertently be moved.

The length of the stroke or the distance at which the platen 24 is spaced from the printing wheels 14 at the conclusion of the stroke depends upon the thickness of the interposed sheet 47, and this varies from time to time. So that the circuit will be appropriately broken in every case despite variations in the thickness of the sheet 47, the switching mechanism 44 is included in the electric circuit. This mechanism includes a drum 51 of insulating material, provided with a pair of aligned pivot pins 52 and 53 which are mounted in associated support arms 54 and 56, respectively. These arms are fastened to an insulating mounting block 56 secured on the core frame 19.

Fastenings 59 not only hold the arms 54 and 56 but likewise secure a brush 61 joined to the lead 45 and a brush 62 joined to the wire 43. The brushes 61 and 62 are disposed to lie in the path of opposite ends of a conducting pin 63 eccentrically piercing the drum 51, so that as the drum is oscillated or rotated the conducting pin 63 forces slightly apart and enters between the resilient brushes in order to establish a circuit therebetween. The drum 51 is preferably rotated by a peripheral drive band 66 which is held in frictional engagement with the drum by a clamp bolt 67 so that the relative position of the pin 63 and an extension arm 68 on the band 66 may be adjusted.

Means are provided for transmitting motion from the operating lever 17 to the drum 51. This is preferably effected by a rod 69, one extremity of which passes through an enlarged aperture in the lever 68 and is held in general location by a clamp screw 71, whereas the opposite end of the rod 69 is bent to provide a hook 72 passing through an aperture in the extremity of the operating lever 17. Mounted on and slidable with respect to the rod 69 is a weight 73 or other means responsive to movement and having material inertia.

When the electric circuit is energized and the electromagnet lifts the armature 22, the operating lever 17 also is lifted. This quick movement lifts the weight 73 and the rod 69, the rod slipping freely through the aperture in the lever 68, so that initially the drum 51 is not rotated on the pivot pins 52 and 53. When the platen 26 has been stopped in its upward movement by abutment of the inserted sheet with the wheels 14, the weight or inertia member 73 continues rapidly in an upward direction since there is nothing to restrain it from such a course. In continuing upwardly it strikes against the extension arm or lever 68 and rapidly rotates the lever and the entire drum 51, so that the conductor pin 63 is abruptly moved from between the members 61 and 62. The circuit is thus quickly interrupted at an entirely different point from that at which it is made, and such interruption depends upon the operation of the inertia member 73 and not upon the movement of the contacts 32 and 33.

As soon as the circuit is interrupted by the movement of the drum, the armature 22 returns toward its original position, the operating lever 17 descends, and the clamp screw 71 at the upper extremity of the rod 69 contacts the lever 68 and causes the lever to move the drum back to its original position with the bar 63 between the brushes 61 and 62. The weight 73 returns gravitally to its original position. The circuit is not electrically continuous when the drum is restored to its original position because as soon as the circuit is originally broken the holding coil 36 becomes immediately ineffective and the contacts 32 and 33 are separated because of the unrestrained resilience of the lever 28. The circuit remains in open condition pending a subsequent introduction of a sheet.

At the conclusion of the stamping operation the stamped sheet lies within the slot 12 and is disposed above and resting upon the upper extremity of the extension 27. In some cases, when the sheet is in this position and if the adjustment of the lever 28 is very delicate, an operator, by moving the sheet back and forth, can move the extension 27 by friction into a second, closed position. To prevent this particular misoperation, the arrangement of Figs. 5 and 6 can be incorporated.

In this instance all of the parts are identical with those previously described, except that the extremity 27 of the lever is slotted and is provided with a pair of side guides 81 and 82, between which an arm 83 extends. The arm is preferably secured by fastenings 84 to the insulating block 33. The arm is upwardly curved to a peak 86 and is then downturned substantially to span the slot 12.

In the operation of this mechanism, when the sheet initially enters the slot 12 it abuts the extension 27 and forces it ahead of the sheet to cause an operation of the stamp. At the conclusion of such operation the sheet, instead of resting directly on top of the extension 27, rests upon the peak 86 of the arm and can be moved backwards and forwards on the arm indefinitely without affecting the extension 27 since it does not come into frictional contact therewith. Not ony does the arm 83 prevent the contacts

from being accidentally closed, but, in conjunction with the side guides **81** and **82**, it also prevents accidental bending or lateral displacement of the spring lever **28** when heavy sheets of paper or cards are quickly inserted from the side or at an acute angle.

I claim:

1. A stamping machine comprising electrical stamp-actuating means, an electric circuit for said means, a switch in said circuit operable by a sheet to be stamped, means for holding said switch in closed position, and means dependent upon the completion of operation of said actuating means for releasing said switch from closed position.

2. A stamping machine comprising electrical stamp-actuating means, an electric circuit for said means, a switch in said circuit operable by a sheet to be stamped, electrically operated means in said circuit for holding said switch in closed position, a second switch in said circuit, and means dependent upon the termination of operation of said actuating means for opening said second switch.

3. A stamping machine comprising electrical stamp-actuating means, means initially actuated by positioning of a sheet to be stamped for energizing said stamp-actuating means, means for subsequently energizing said stamp-actuating means, and means for terminating the energization of said stamp-actuating means subsequent to termination of operation of said stamp-actuating means.

4. A stamping machine comprising electrical stamp-actuating means, means initially actuated by positioning of a sheet to be stamped for energizing said stamp-actuating means, means for subsequently energizing said stamp-actuating means, and means dependent upon the termination of operation of said stamp-actuating means for terminating the energization of said stamp-actuating means.

5. A stamping machine comprising electrical stamp-actuating means, means initially actuated by positioning of a sheet to be stamped for electrically energizing said stamp-actuating means, and means operating whether or not the positioning of said sheet is maintained for continuing energization of said stamp-actuating means.

6. A stamping machine comprising electrical stamp-actuating means, means initially actuated by positioning of a sheet to be stamped for electrically energizing said stamp-actuating means, means for continuing such energizing of said stamp-actuating means, and means for terminating the energization of said stamp-actuating means after the completion of operation of said stamp-actuating means.

7. A stamping machine comprising stamp-actuating means, means for energizing said stamp-actuating means, and means dependent upon the completion of operation of said stamp-actuating means for terminating the energization of said stamp-actuating means.

8. A stamping machine comprising electrical stamp-actuating means, means for maintaining electrical energization of said stamp-actuating means, and means dependent upon the termination of operation of said stamp-actuating means for interrupting said electrical energization.

SVEN SVENSON.