April 14, 1931. R. L. GREIST 1,800,387

ARTICLE SUPPORTING DEVICE

Filed Dec. 30, 1926 2 Sheets-Sheet 1

Fig. 1.

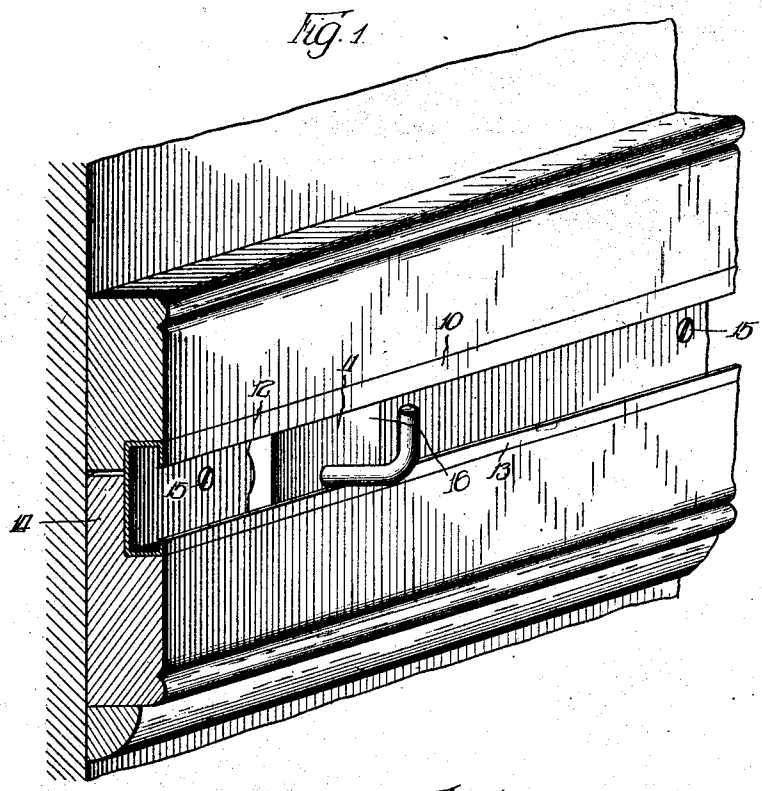


Fig. 2.

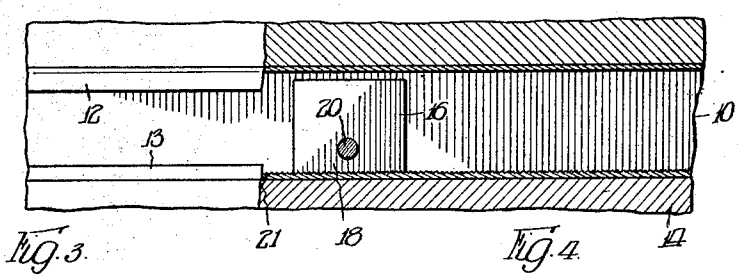


Fig. 3.

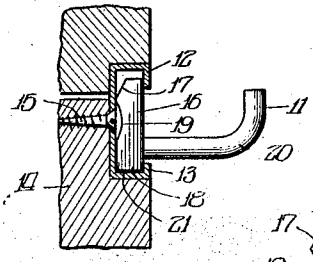


Fig. 4.

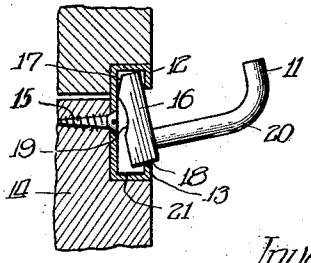


Fig. 5.

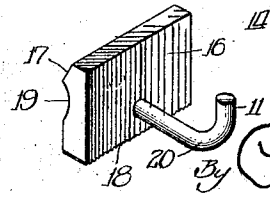


Witness:
R. Burkhardt.

Inventor:
Raymond L. Greist,
By Cromwell, Greist & Warden
attys.

April 14, 1931. R. L. GREIST 1,800,387

ARTICLE SUPPORTING DEVICE

Filed Dec. 30, 1926 2 Sheets-Sheet 2

Fig. 6.

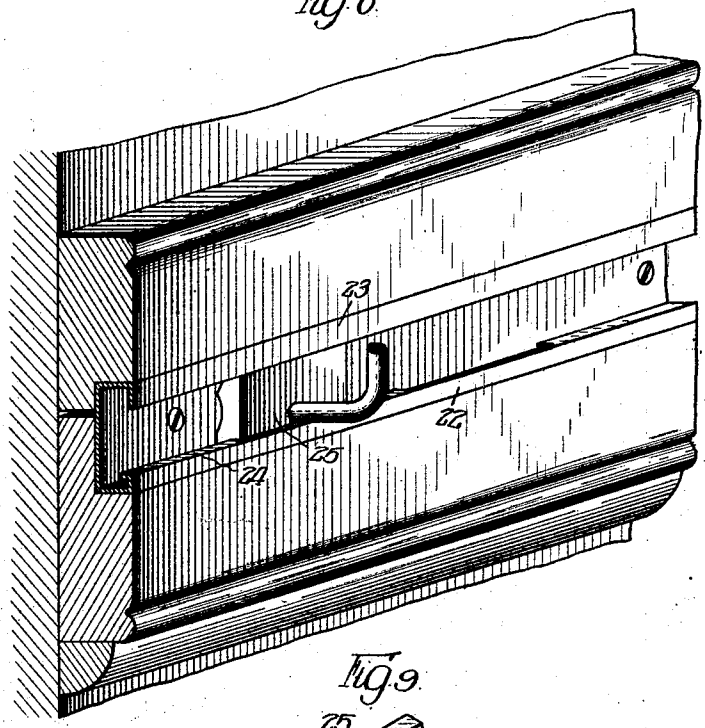


Fig. 9.

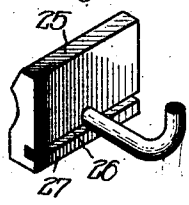


Fig. 7.

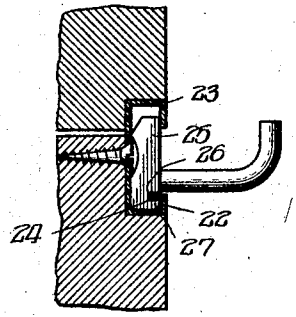


Fig. 8.

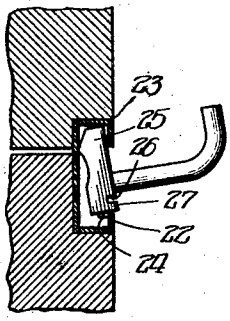


Fig. 11.

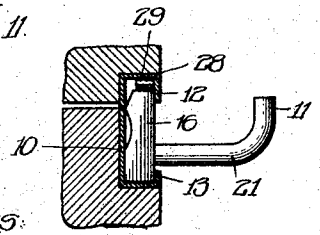


Fig. 10.

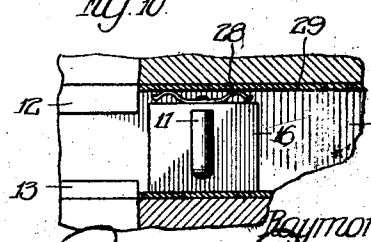


Witness:
R. Burkhardt

Inventor:
Raymond L. Greist,
By Cromwell, Greist & Worden
Attys.

Patented Apr. 14, 1931 1,800,387

# UNITED STATES PATENT OFFICE

RAYMOND L. GREIST, OF CHICAGO, ILLINOIS, ASSIGNOR TO ANDREW HOFFMAN MANUFACTURING COMPANY, OF CHICAGO, ILLINOIS, A CORPORATION OF ILLINOIS

## ARTICLE-SUPPORTING DEVICE

Application filed December 30, 1926. Serial No. 157,899.

The present invention has to do with article-supporting devices of the type adapted to be applied to the walls of school rooms for holding maps, charts, pictures and the like in various positions with respect to such walls.

While devices of this type are especially well suited for the purpose above specified, they may also be used advantageously in many other different ways. The particular device forming the subject matter of this invention is an improvement over that disclosed in the copending application of Andrew Hoffman filed August 28th, 1926, under Serial No. 132,138.

One of the principal objects of the invention is to provide an improved device of the type described, in which the article-supporting members may be attached to or removed from the rail member at any one of a number of points lengthwise thereof, and in which the rail member is uniform in appearance throughout its length and harmonizes inconspicuously with the associated trim on the wall to which applied.

Another important object is to provide an improved supporting device which is so constructed and proportioned as to be capable of sustaining a heavier load than the devices heretofore used for the same general purpose.

Other objects and advantages of the invention will be apparent upon a full understanding of the construction, arrangement and operation of the improved device.

For the purpose of exemplification, several different forms of the invention are presented herein, but it will be appreciated that the invention is also susceptible of embodiment in other structurally modified forms coming equally within the scope of the claim.

In the accompanying drawings:

Fig. 1 is a fragmentary perspective view showing the device applied to the trim on a wall;

Fig. 2 is a partially sectioned front view;

Fig. 3 is a transverse section, showing the article-supporting member of the device in operative position in the rail;

Fig. 4 is a similar view, showing the article-supporting member while being removed from the rail;

Fig. 5 is a perspective view of the article-supporting member;

Fig. 6 is a view corresponding to Fig. 1, but showing another form of the invention;

Fig. 7 is a transverse section through the form of the device illustrated in Fig. 6, showing the article-supporting member in operative position in the rail;

Fig. 8 is a similar view, showing the article-supporting member while being removed from the rail;

Fig. 9 is a perspective view of the article-supporting member illustrated in Figs. 6, 7 and 8;

Fig. 10 is a view corresponding to Fig. 2, but showing a still different form of the invention; and

Fig. 11 is a transverse section through the form of the device illustrated in Fig. 10.

The structural embodiment of the invention illustrated in Figs. 1 to 5 inclusive will first be described. It will be observed in those views that the device includes a channel rail 10, and an article-supporting member 11 in association therewith. Only one article-supporting member is shown, but the use of a number of such members is of course contemplated.

The rail 10 is a sheet metal strip of generally U-shaped cross section, and is provided with upper and lower flanges 12 and 13 which extend toward each other. The upper flange 12 is wider than the lower flange 13, and both flanges extend continuously from one end of the rail to the other in equally spaced relation to each other at all points. The rail, when applied to a wall or other surface, is attached, either directly to the wall or to the trim 14 thereon, by a number of screws 15 which pass through counter-sunk apertures in the back of the rail and are positioned with their head substantially flush with the back.

The article-supporting member 11 includes a block 16 of generally rectangular form which fits within the channel of the rail. The block is of slightly less height than the channel, as shown in Figs. 2, 3 and 4, and is beveled at 17 in order to permit the lower end 18 of the block to be swung outwardly

over the edge of the lower flange 13 when the block is shifted upwardly in the channel to a point where the end 18 is in a position where it will clear the flange 13. The block may also be grooved out at 19 in order to clear the counter-sunk heads of the attaching screws 15.

A hook 20 projects outwardly from the block 16 through the slot formed between the upper and lower flanges of the rail, and constitutes a convenient and adjustably positioned projection from which various articles may be suspended. The hook may be connected with the block at any portion of the latter which is exposed between the upper and lower flanges of the rail, but is preferably connected near the lower end 18 at a point just above the edge of the lower flange 13, whereby to increase the stability of the block when the hook is supporting a load and decrease the pressure applied to the upper flange 12 by the upper end of the block.

A supporting device embodying the structural features above described is extremely inexpensive to manufacture, since no notches or special formations of any kind need be provided at intervals in the rail to permit application or removal of the article-supporting members, and the rail is consequently of uniform cross-sectional shape throughout the length thereof. Furthermore, the article-supporting members do not have to be applied to or removed from the rail at certain locations only, but may be applied or removed at any point.

If desired, the bottom 21 of the rail, and the lower end 18 of the block 16, may be corrugated, as shown in Figs. 2, 3 and 4, in order to prevent the block from shifting longitudinally of the channel when the hook is supporting a load and the force applied thereto is not strictly in a plane perpendicular to the rail. The corrugations, being non-interlocking in a direction lengthwise of the rail, as best shown in Figs. 2 and 5, will yieldingly resist sliding movement of the block 16 to an extent sufficient to prevent accidental displacement of the same, but such corrugations do not make it necessary for the block to be first lifted in order to change the position of the same.

In Figs. 6 to 9 inclusive of the drawings is illustrated another structural embodiment of the invention which differs from the form first described in the following particulars: the lower flange 22 of the rail 23 is provided along its upper edge with a narrow rearwardly extending flange 24, and the front face of the block 25 which slides in the channel in the rail is provided with a groove 26, as shown in Fig. 9. The flange 24 is disposed within the groove 26 when the article-supporting member is in operative position, as shown in Fig. 7, and such interlocked association of the flange and groove effectively prevents the block from shifting upwardly or tilting. At intervals throughout the length of the rail 23, the rearwardly extending flange 24 is cut away for a distance slightly greater than the length of the block 25, as shown in Figs. 6 and 8, and, when the block is shifted longitudinally of the rail into a position opposite one of such interruptions in the flange 24, it may be shifted upwardly and removed from the rail by swinging the lower end 27 forwardly over the upper edge of the flange 22.

By employing the cooperating flange and groove construction described, no change in the uniform appearance of the rail is effected as the rail is usually placed above the level of the eye, and the article-supporting member is securely locked in position in the channel of the rail.

In Figs. 10 and 11 is illustrated still another embodiment of the invention which differs from the first form in that the corrugations between the block and the bottom of the channel are omitted and the block 16 is provided on the upper face thereof with a light bow spring 28, which bears resiliently at all times against the top 29 of the rail 10 and tends to prevent the block from shifting or tilting when in use. The spring 28 is caused to flatten against the top of the block 16 when the latter is being applied to or removed from the rail.

I claim:

A device of the character described, comprising a channel rail which is provided along the upper margin thereof with a downwardly extending flange of uniform width and along the lower margin thereof with an upwardly extending flange of uniform width which is narrower than the downwardly extending flange, and an article-supporting member in the channel which is of less height than the distance between the edge of the lower flange and the top of the channel so that it may be shifted upwardly therein at any point longitudinally of the device and swung outwardly over the edge of the lower flange.

In testimony whereof I have hereunto subscribed my name.

RAYMOND L. GREIST.