(No Model.)

2 Sheets—Sheet 1.

O. A. HARRIS.

WASHING MACHINE.

No. 277,896. Patented May 22, 1883.

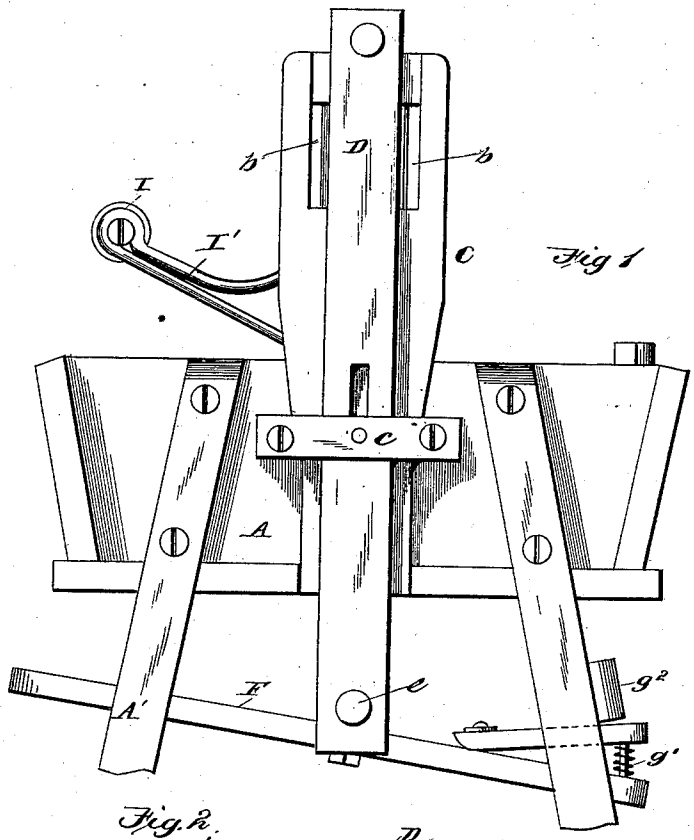

Fig 1

Fig. 2.

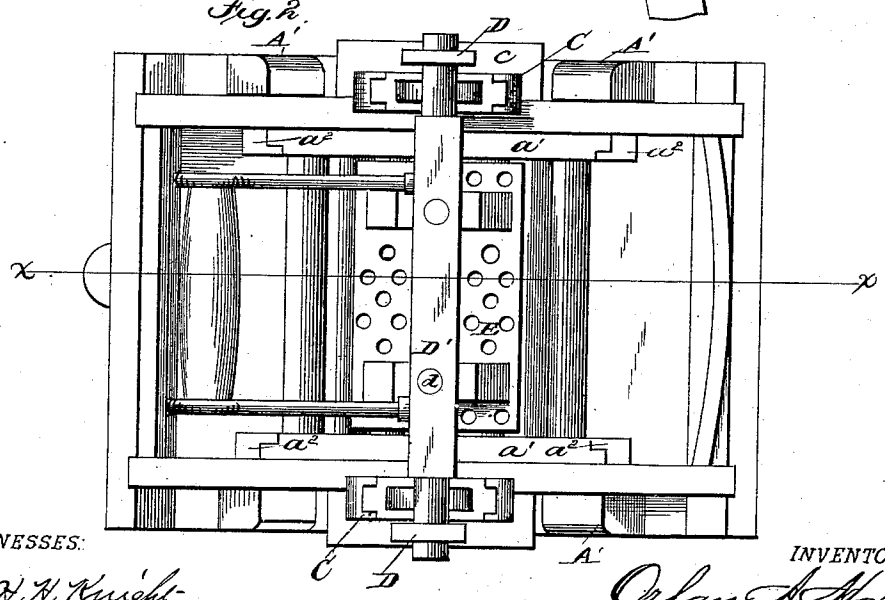

WITNESSES:

W. H. Knight

H. Pennhard

INVENTOR

Orlan A. Harris

per Edson Bros

Attorneys

N. PETERS. Photo-Lithographer. Washington, D. C.

(No Model.) 2 Sheets—Sheet 2.

O. A. HARRIS.

WASHING MACHINE.

No. 277,896. Patented May 22, 1883.

Fig. 3.

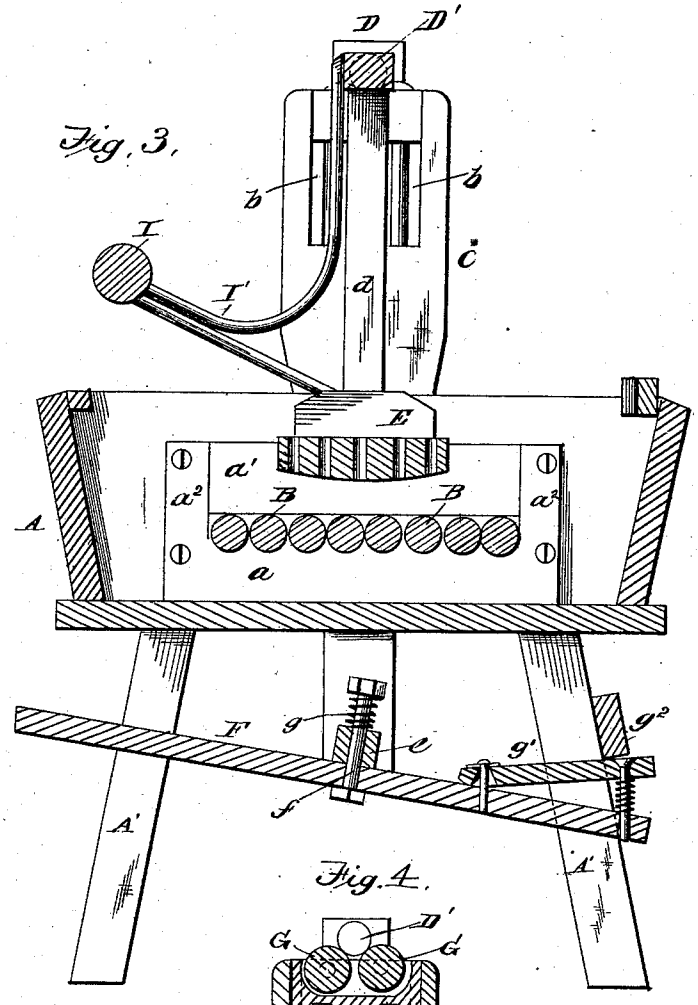

Fig. 4.

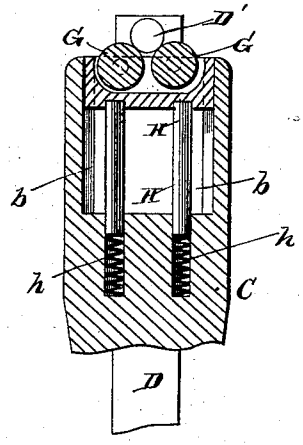

WITNESSES:

W. H. Knight

Harry Barnhard

INVENTOR

Orlan A. Harris

per Edson Bros.

Attorneys

N. PETERS. Photo-Lithographer, Washington, D. C.

UNITED STATES PATENT OFFICE.

ORLAN A. HARRIS, OF MADELIA, MINNESOTA.

WASHING-MACHINE.

SPECIFICATION forming part of Letters Patent No. 277,896, dated May 22, 1883.

Application filed November 21, 1882. (No model.)

To all whom it may concern:

Be it known that I, ORLAN A. HARRIS, a citizen of the United States, residing at Madelia, in the county of Watonwan and State of Minnesota, have invented certain new and useful Improvements in Washing-Machines; and I do declare the following to be a full, clear, and exact description of the invention, such as will enable others skilled in the art to which it appertains to make and use the same, reference being had to the accompanying drawings, and to the letters and figures of reference marked thereon, which form a part of this specification.

This invention relates to improvements in washing-machines, having for its object to cause the ready and thorough washing of the fabrics, while the operative mechanism is adapted to be accommodated to the thickness of the article or the number of articles that may be "in washing" at a time, and to enable the automatic elevation of the rubber; and the nature of the invention consists in the combination and arrangement of parts, substantially as hereinafter more fully set forth and claimed.

In the accompanying drawings, Figure 1 is a side view of my machine. Fig. 2 is a plan view, and Fig. 3 is a vertical section thereof. Fig. 4 is a detailed view of the same in section.

In carrying out my invention I employ a tub or clothes-receptacle, A, preferably rectangular in shape, and supported upon suitable legs, A'.

Arranged within the tub or receptacle A, about at the middle, is a series of rolls, B, journaled in bed-pieces *a*, screwed or otherwise fastened to the sides of the tub. These rolls are held removably in position as against vertical displacement by the action of the fabrics when operated on by means of boards or slides *a'*, fitted to slide in grooved uprights a^2 of the roller bed-pieces *a*.

C C are standards fixed to the sides of the tub or receptacle A, with their upper portions vertically slotted or recessed, as at *b*.

D D are uprights confined so as to slide along the sides of the standards C within staples *c*, fastened to the sides of the tub, across the said standards, the upper ends of said uprights having journaled therein a shaft or cross-piece, D', from which the rubber E is suspended by means of arms *d d*, while the lower ends of said uprights are connected together below the tub by the axial bar *e*.

To the bar *e* is connected, about midway its length, the foot lever or treadle F by means of a bolt, *f*, around which is coiled or fitted a spring, *g*, to allow the lever or treadle to have a limited independent movement of the axial bar *e* as it is operated. The rear portion of the lever or treadle has connected to it a spring cushion or buffer, *g'*, which bears against a cross-piece, g^2, of the legs A' of the tub or receptacle A, and by means of which the forward end of the treadle or lever is held, when not in use, in an elevated position out of the way.

The rubber proper, E, consists, preferably, of a solid bar, through which apertures are made, and which is rounded or made convex on its lower surface to present a smooth surface to and prevent the tearing of the fabrics.

The axial cross-piece D' of the rubber bears at its trunnioned ends upon frictional rolls G, journaled in boxes G', supported so as to slide within the slots *b* of the uprights C upon rods H, cushioned upon springs *h*, let into sockets or recesses in the said uprights, whereby when downward pressure is applied to the rubber through its handle I, connected thereto by arms I', it is adapted to be lowered and brought into contact with the fabrics to be operated and accommodated to the thickness of the fabric or number of fabrics to be washed, and whereby the said rubber is adapted to be automatically elevated out of the way to permit the ready removal of the fabrics after washing.

In order to mount bar D' upon friction-rollers and to secure smooth vertical play to the boxes, it is necessary to provide the same with double spring-cushions. The treadle being centrally pivoted and the bar g^2 curved outwardly, (see Fig. 1,) it can be turned to any point most convenient to the operator. In this class of machines it is frequently more tiresome to hold the treadle than to wash the clothes. My device relieves the operator from much of this fatigue, owing to the arrangement of the spring-buffer and spring-bolt. It also provides a universal joint between the treadle and the slotted side pieces, whereby the springing and binding of parts is prevented.

I am aware that it is not broadly new to

mount a frame which supports the rubber on spring-bearings; also, that a rubber-frame and a foot-treadle have been connected together by means of uprights extending from the axle of the rubber-frame to a cross-bar at the lower ends of said uprights.

I claim and desire to secure by Letters Patent—

1. In a washing-machine, the cross-piece D′, slotted uprights C, having boxes G′, and friction-rolls G, said boxes being mounted upon rods H, cushioned upon springs *h*, which are confined in sockets in the uprights C, all combined substantially as and for the purpose set forth.

2. In a washing-machine, the combination, with the tub and the uprights C, with vertically-adjustable boxes G′, having rolls G and supported upon spring-cushions H *h*, of the rubber E, having the axial cross-bar D′, and the sliding uprights D, connected to the treadle F, substantially as and for the purpose set forth.

3. In a washing-machine, the cross-bar D′, having a rubber connected thereto, and sliding uprights D, in combination with the treadle F, centrally pivoted to the bar *e* by means of the spring-bolt *f g*, and provided at one end with a spring-buffer, *g′*, bearing against a cross-piece, g^2, as and for the purpose set forth.

4. In a washing-machine, the combination, with the tub having the bed-rolls B and the uprights C, with vertically-adjustable boxes G′, having rolls G and supported upon spring-cushions H *h*, of the rubber E, having the axial cross-bar D′, and the sliding uprights D, connected to the treadle F, the latter being pivoted to the cross-bar *e* by spring-bolt *g*, and having a spring-buffer, *g′*, substantially as shown and described.

In testimony whereof I affix my signature in presence of two witnesses.

ORLAN A. HARRIS.

Witnesses:
W. C. JONES,
KATE M. BILL.