No. 649,823.

Patented May 15, 1900.

W. H. DOUGLAS.

STROPPING MACHINE.

(Application filed Sept. 1, 1899.)

(No Model.)

Fig. 1

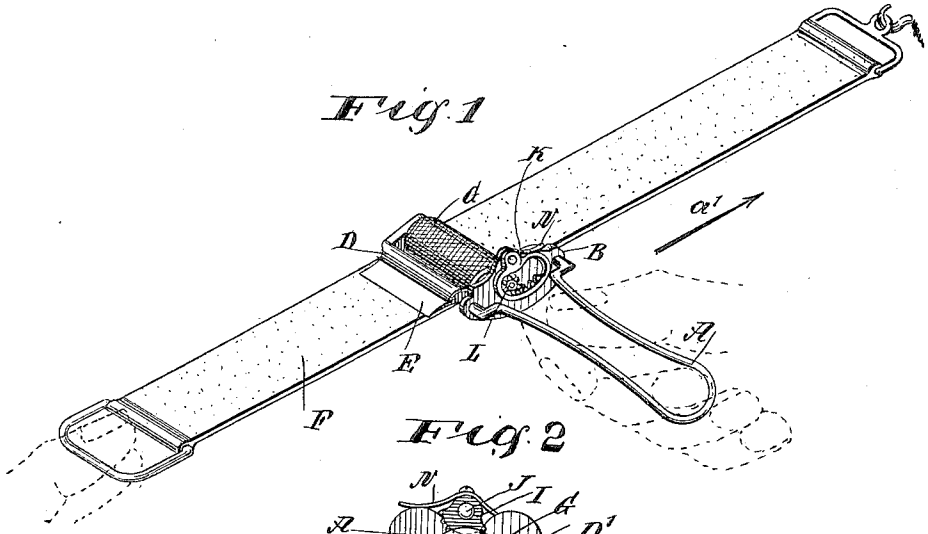

Fig. 2

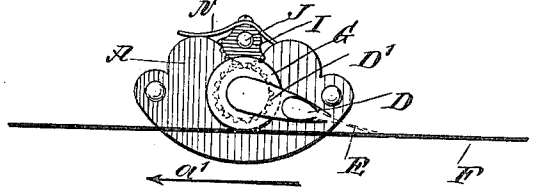

Fig. 3

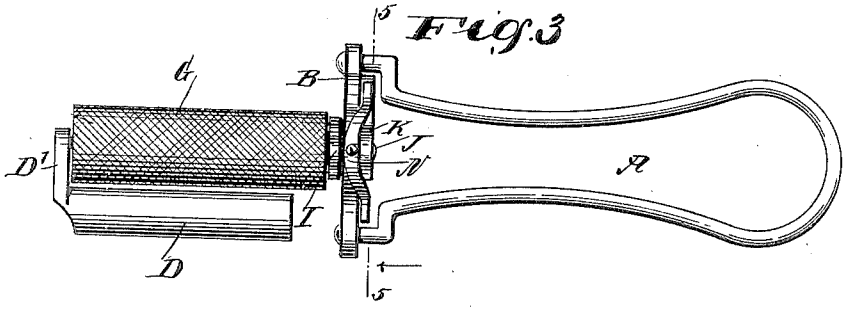

Fig. 4

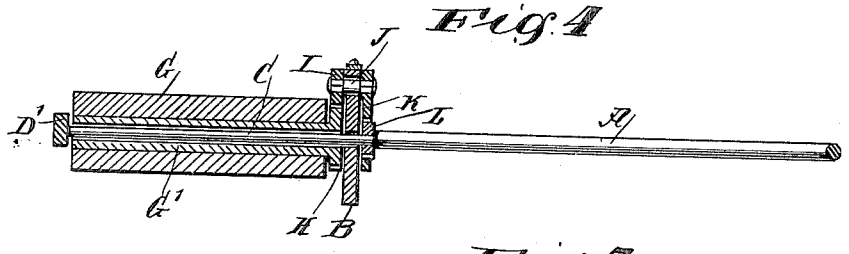

Fig. 5

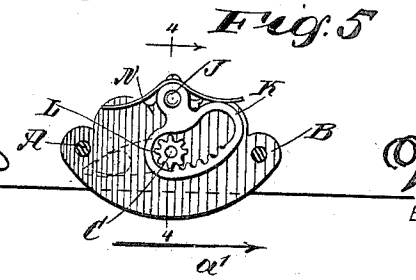

WITNESSES:

John A. Bergstrom

Geo. G. Hosted

INVENTOR

W. H. Douglas

BY

Munn

ATTORNEYS

THE NORRIS PETERS CO., PHOTO-LITHO., WASHINGTON, D. C.

UNITED STATES PATENT OFFICE.

WILLIAM H. DOUGLAS, OF BELLEVILLE, NEW JERSEY, ASSIGNOR OF ONE-HALF TO ALLAN C. WALLING, OF SAME PLACE.

STROPPING-MACHINE.

SPECIFICATION forming part of Letters Patent No. 649,823, dated May 15, 1900.

Application filed September 1, 1899. Serial No. 729,229. (No model.)

To all whom it may concern:

Be it known that I, WILLIAM H. DOUGLAS, of Belleville, in the county of Essex and State of New Jersey, have invented a new and Improved Stropping-Machine, of which the following is a full, clear, and exact description.

The object of the invention is to provide a new and improved stropping-machine for sharpening razor and other blades and which is simple and durable in construction, adapted for use on any kind of stropping or sharpening surface, and arranged to automatically reverse the razor-blade for the return stroke.

The invention consists of novel features and parts and combinations of the same, as will be fully described hereinafter and then pointed out in the claims.

A practical embodiment of my invention is represented in the accompanying drawings, forming a part of this specification, in which similar characters of reference indicate corresponding parts in all the views.

Figure 1 is a perspective view of the improvement as applied. Fig. 2 is an end elevation of the improvement. Fig. 3 is a plan view of the same. Fig. 4 is a sectional side elevation of the same on the line 4 4 in Fig. 5, and Fig. 5 is a sectional end elevation of the same on the line 5 5 in Fig. 3.

The improved stropping-machine is provided with a suitable handle A, secured to or projecting from a frame B, in which is mounted to turn a shaft C, carrying at one outer end an arm D′, supporting the blade-holder D for receiving and carrying the razor-blade E to be stropped on a reversing strop F of any approved construction.

On the shaft C is mounted to turn the bushing G′ of a roller G, mounted to travel on the stropping-surface of the strop F, and on the inner end of said bushing is formed or secured a gear-wheel H in mesh with a segmental gear-wheel I, secured on a short shaft J, journaled in the frame B. (See Fig. 4.) On the shaft J is secured a segmental rack or internal gear-wheel K in mesh with a pinion L, secured on the inner end of the shaft C. A spring N is attached to the frame B, and the free ends of the spring extend into the path of the ends of the rack K, so that when the latter swings into an extreme position either to the right or to the left it presses on the ends of the spring to cause a short return movement of the said rack and the parts connected therewith previously to the operator making the return stroke, as hereinafter more fully described.

Now by reference to the drawings it will be seen that the blade-holder D extends lengthwise of the roller G and in close proximity thereto and is adapted to swing from one side of the frame to the other when the device is used on the strop F—that is, when the operator by taking hold of the handle A moves the roller G in contact with the stropping-surface of the strop F and then pulls the machine along, so that the roller G rolls off on the stropping-surface and is thereby rotated, the peripheral surface of the roller being preferably enlarged by transverse ribs or corrugations to insure a ready turning of the roller when used on the strop F, as above described.

It is evident that when the machine is moved forward on the strop F in the direction of the arrow *a*′, as shown in Fig. 1, then the blade E has its cutting edge on the stropping-surface of the strop F and the left-hand end of the segmental gear-wheel K is in mesh with the pinion L. The moment the operator reaches the end of the forward stroke and immediately before making the return stroke the right-hand end of the spring N by its resiliency causes a swinging of the gear-wheel K to the right, so that the edge of the blade E is lifted off the stropping-surface, and upon the operator moving the machine on the return stroke, with the roller G still bearing on the strop F, causes a turning of said roller in an opposite direction, whereby the gear-wheel H will impart a turning motion to the segmental gear-wheel I, the shaft J, and the gear-wheel K to turn the latter farther to the left, so that the pinion L is rotated and with it the shaft C to swing the arm D′ and with it the blade-holder D and the blade E over to the right-hand side of the roller G. Thus the position of the blade has been reversed, and during the return stroke of the machine the other side of the cutting edge is subjected to the action of stropping on the strop F.

When the gear-wheel K swings to the left, it compresses the corresponding end of the

spring N, and as soon as the operator reaches the end of the stroke then the resiliency of the spring will cause a short return movement of the segmental gear-wheel K to lift the cutting edge of the blade out of contact with the stropping-surface of the strop F. When the operator now starts on the forward stroke, the blade is completely swung over to the left-hand side of the roller back to the position shown in Fig. 1. The above-described operation is then repeated.

By reference to Fig. 2 it will be seen that the roller G is of such diameter that the blade E stands at an angle to the strop F to insure a proper and uniform stropping of the cutting edge of the blade.

Having thus fully described my invention, I claim as new and desire to secure by Letters Patent—

1. A razor-stropping machine, comprising a frame, a shaft journaled in said frame, a driving-roller surrounding and mounted to turn upon said shaft and provided with a gear-wheel, a blade-holder carried by said shaft, a segmental gear mounted on said frame and meshing with said gear-wheel, a segmental rack on the axis of the segmental gear-wheel, and a pinion on the blade-holder shaft and meshing with said rack, as and for the purpose set forth.

2. A razor-stropping machine, provided with a handled frame, a shaft journaled therein, a driving-roller mounted to turn concentrically on the shaft, a blade-holder secured on the shaft and extending alongside the roller, and a gearing for connecting said roller and said blade-holder shaft with each other, so that upon rotating the driving-roller in one direction a swinging motion is given to the blade-holder in an opposite direction, substantially as shown and described.

3. A razor-stropping machine, provided with a handled frame, a shaft journaled therein, a driving-roller journaled concentrically with the shaft, a blade-holder secured on the shaft and extending alongside the roller, a gearing for connecting said roller and said blade-holder shaft with each other, so that upon rotating the driving-roller in one direction a swinging motion is given to the blade-holder in an opposite direction, and a spring connected with said gearing and adapted to be compressed thereby and by its resiliency cause the edge of the blade to be moved out of engagement with the strop-surface at the end of the stroke, substantially as shown and described.

4. In a razor-stropping machine, a handled frame, a shaft journaled in said frame and provided with a pinion, a blade-holder carried by said shaft, a driving-roller, means whereby a rotation of the driving-roller will impart a swinging movement to the blade-holder, said means including a rack meshing with the pinion of the shaft, and a spring arranged to be acted upon by said rack whereby to move the latter when pressure thereon is removed, as and for the purpose set forth.

5. In a stropping-machine, a handled frame, a shaft in said frame and carrying a blade-holder, means for reversing the position of the blade-holder at the end of the stroke, said means including a segmental rack, and a spring attached to the frame and adapted to be engaged by said rack when the latter is at the limit of its movement in either direction, whereby to start the movement of the rack in the opposite direction, as and for the purpose set forth.

WILLIAM H. DOUGLAS.

Witnesses:
JOHN J. CONNELL,
GEORGE STEWART.