W. McCLINTOCK.

OIL SEPARATOR.

APPLICATION FILED MAR. 25, 1913.

1,116,903.

Patented Nov. 10, 1914.

2 SHEETS—SHEET 1.

Fig. 1.

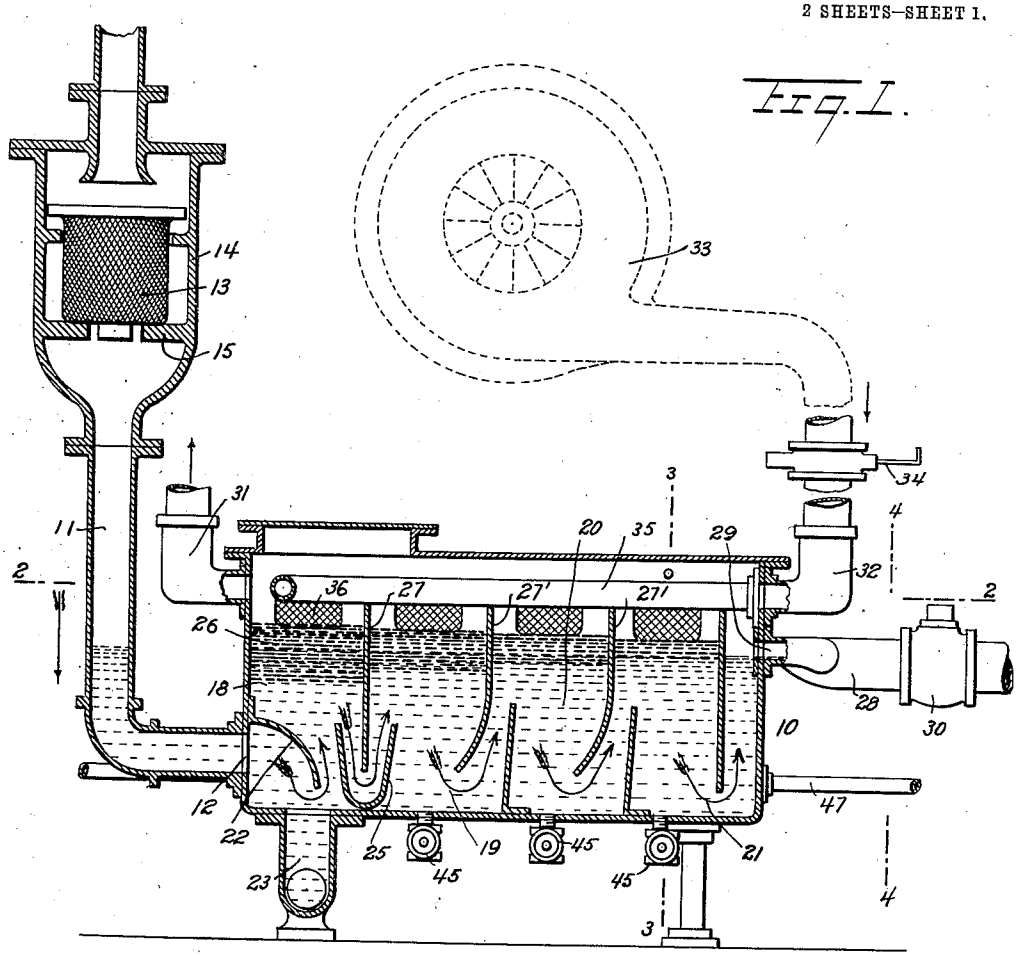

Fig. 2.

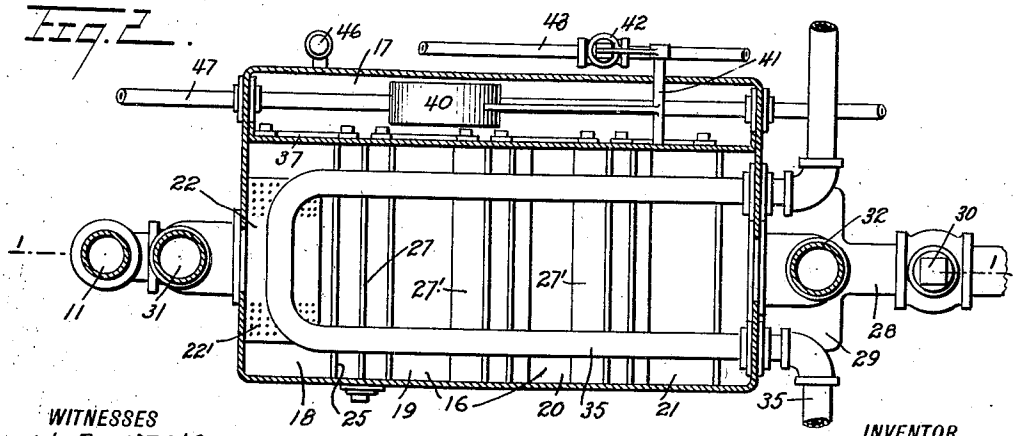

WITNESSES

H. J. Walker

Geo. L. Beeler

INVENTOR

William McClintock

BY Munn & Co.

ATTORNEYS

W. McCLINTOCK.

OIL SEPARATOR.

APPLICATION FILED MAR. 25, 1913.

1,116,903.

Patented Nov. 10, 1914.

2 SHEETS—SHEET 2.

Fig. 3.

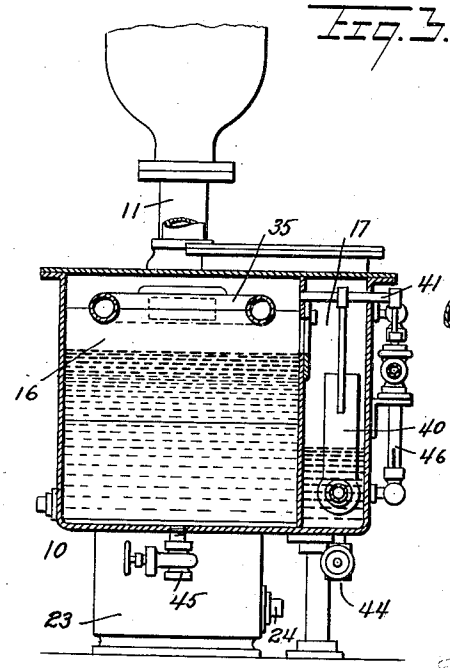

Fig. 4.

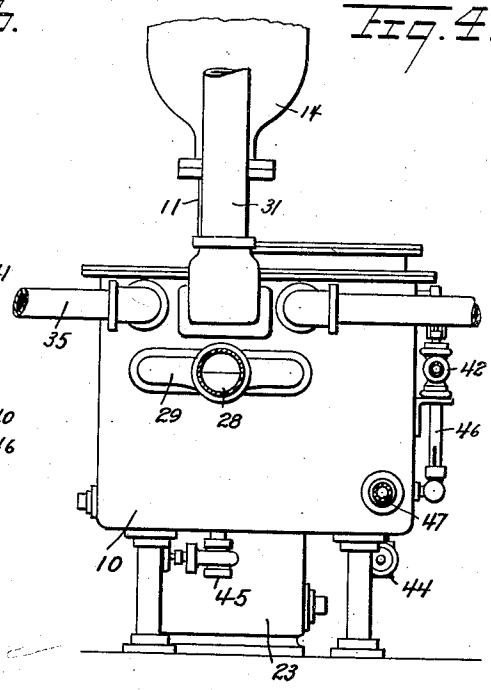

Fig. 5.

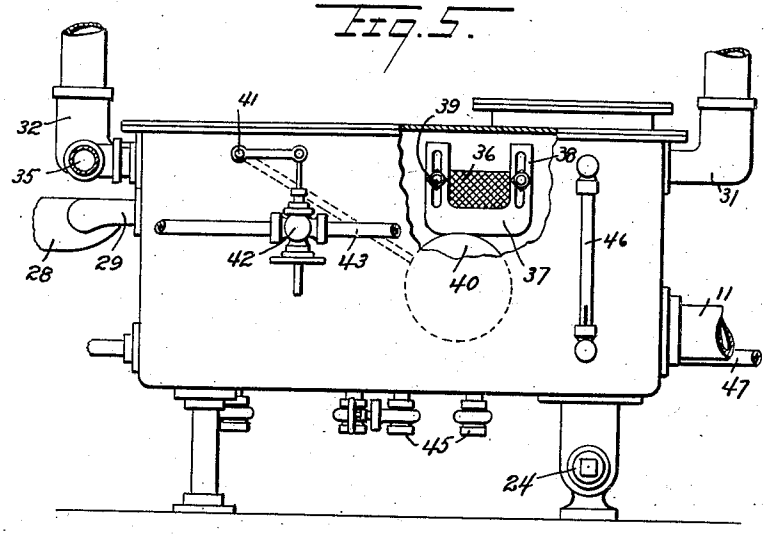

WITNESSES

H. J. Walker.

Geo. L. Beeler

INVENTOR

William McClintock

BY Munn & Co

ATTORNEYS

UNITED STATES PATENT OFFICE.

WILLIAM McCLINTOCK, OF NEW YORK, N. Y.

OIL-SEPARATOR.

1,116,903. Specification of Letters Patent. Patented Nov. 10, 1914.

Application filed March 25, 1913. Serial No. 756,672.

To all whom it may concern:

Be it known that I, WILLIAM McCLINTOCK, a citizen of the United States, and a resident of the city of New York, borough of Manhattan, in the county and State of New York, have invented a new and Improved Oil-Separator, of which the following is a full, clear, and exact description.

This invention relates to the separation of liquids and has particular reference to an improved apparatus whereby liquids of different specific gravities may be separated primarily by the operation of gravity.

Among the objects of this invention is to so construct a device of the character indicated whereby a more thorough separation of the lighter from the heavier liquids will be effected.

A further object of this invention is to provide for a more thorough and satisfactory disposition of the oils or other lighter liquids.

The foregoing and many other objects of this invention will hereinafter be more fully described and claimed and illustrated in the drawings forming a part of this specification in which like characters of reference indicate corresponding parts in all the views, and in which—

Figure 1 is a vertical sectional view substantially on the line 1—1 of Fig. 2, showing a preferred embodiment of the invention; Fig. 2 is a horizontal section on the line 2—2 of Fig. 1; Fig. 3 is a transverse vertical section on the line 3—3 of Fig. 1; Fig. 4 is an end elevation with certain parts in section on the line 4—4 of Fig. 1; and Fig. 5 is a rear elevation, parts being broken away.

The several parts of this invention may be made of any suitable materials, and the relative sizes and proportions, as well as the general design and arrangement thereof, may be varied to a considerable extent without departing from the spirit of the invention hereinafter specifically claimed.

Referring to the drawings, I show at 10 a receptacle constituting the principal part of the separator mechanism, the same having leading into one end a pipe 11 into and through which the mixture of various liquids to be treated is delivered to the receptacle 10 at a point 12 substantially close to the lower part of one end.

At 13 I show a basket or strainer of any suitable reticulated construction removably placed in a chamber 14 and resting upon a series of studs or arms 15 whereby ample space is provided between the strainer and the walls of the chamber. The mixture of fluids to be treated will be understood to be directed to the strainer from above from any suitable source, and for convenience of description such mass of fluid may be regarded as consisting of water and various oils of different characters as to lightness and volatility. The apparatus comprising the principal parts of this device will be understood as being located at any suitable place such, for instance, as below the floor of a garage or other building in which mixed masses of oil and water are subject to accumulate.

The separator or receptacle 10 is shown as being substantially of rectangular configuration and comprising two general compartments, one, the separator 16, and the other, an oil receptacle 17. The separator portion 16 is shown comprising a series of receptors, shown at 18, 19, 20 and 21, although it will be understood that the number and arrangement of the receptors may vary from the disclosure herein made. The receptors are constituted by a series of baffle plates which extend transversely across the interior of the separator 16, but there being provided fluid communication from one receptor to the next.

The mixture flowing through the inlet 11 is discharged into the receptor 18 against a downwardly projecting baffle plate 22 which is solid where it extends over the mouth of the pipe 11, but which is provided with numerous perforations 22′ adjacent its ends through which a certain portion of the oil may pass directly upwardly into the receptor 18, the bulk of the mass, however, being deflected downwardly toward the bottom of the receptor 18 and any heavy insoluble particles conveyed by the fluid will be deposited into a trap 23 normally closed by a plug 24 and through which said deposit may be withdrawn from time to time. The course of the fluid mass from the bottom of the first receptor is upwardly between the baffle plate 22 and the front wall of a U-shaped baffle plate 25. A considerable portion of the oil will be separated in the first receptor and will flow to the top, as indicated at 26, where the separated oil which may still remain in the mixture will be carried forward and downward between the baffle plate 25 and a

partition 27, the course of the fluid being indicated by the arrows on Fig. 1. Another portion of the oil will be separated by gravitation in the second receptor 19 and will float to the top as indicated, and so on throughout the separator, the proportions of oil becoming gradually smaller as the outlet end of the separator is reached. The water from which the oils have been separated as the fluid mass passes through all of the receptors passes into and through an outlet pipe 28, the mouth of which is shown at 29 as being very broad and comparatively shallow whereby the maximum outflow is insured with a minimum variation in rise of the surface of the mixture or oil in the separator. A check valve 30 is provided in the discharge pipe 28 so as to prevent any possibility of the device becoming flooded by the stoppage of the main sewer or drainage from the building. Since the specific gravity of the entire mass in the first receptor is less than in any of the succeeding receptors, the normal surface level at the top of the oil therein will be slightly higher than in the next receptor.

Any suitable means may be devised to dispose of the oil or oils separated from the water. If the oil is gasolene, or some other light volatile oil, the bulk of it may pass off freely and be carried out through a pipe 31 leading upwardly from the top of the separator, draft being provided by means of an inlet pipe 32 at the opposite end. Any suitable means such as a fan 33 may be provided to augment such draft, and the force or volume of the same may be regulated according to the temperature or the nature of the oils by means of a gate valve 34, by way of illustration.

A closed heating coil 35 through which may be passed steam, hot water or the like, is arranged horizontally within the separating chamber 16 and in contact with or close to the surface of the oil for the purpose of augmenting the evaporation of the oil. Such coil is shown as entering the rear end of the separator and after passing around over the receptors emerges from the same end. The loop or coil of the heater is shown as being supported upon the baffle plates 27 and 27′.

I preferably arrange said coil with two substantially parallel legs which extend along on opposite sides of the line joining the air inlet and outlet.

An overflow opening 36 is provided adjacent the top of each receptor, the same leading into the oil receptacle 17. The effective height of the overflow through each of the openings 36 may be regulated by a plate 37 adjustable through slotted ears 38 and bolts 39 as shown best in Fig. 5. My object in making these openings adjustable is to maintain a substantial uniformity of level of discharge with respect to all of the receptors, and such adjustment is necessary because of the great variety as to character or specific gravity of the oils which may be separated from the mass according to the peculiar industry with which the apparatus may be used. The heavy oils or gelatinous products which are discharged through the openings 36 and collected in the receptacle 17 may be disposed of in any suitable manner when sufficient accumulation thereof is obtained. In order to provide safety with respect to overflow, I employ some suitable automatic means including, for instance, a float 40 within the oil receptacle, the float being carried by an arm pivoted at 41 having communication with a balanced valve 42 associated with any suitable signal mechanism, for instance, a water pipe 43, the arrangement being such that when a sufficient depth of oil is received in the oil receptacle, the balanced valve will be caused to open and permit a small stream of water to be discharged through the pipe 43 into a sink or any convenient place where some workman may see it. The oil may be dipped or pumped from the receptacle 17 as occasion may require, but it may be drained from the bottom through a stop cock or drain 44. Other drains 45 may be provided for the several compartments of the separator 16, if desired. I also prefer to employ a sight glass 46 on the outside of the oil receptacle for the purpose of observing the level of the oil. An auxiliary heating pipe or coil may be provided in the oil receptacle, as shown at 47, for the purpose of facilitating the manipulation of the oil.

I claim:

1. The herein described fluid separator comprising a series of receptors having communication with each other at their bottoms, means to deliver fluid mixture in the first receptor adjacent its bottom, a curved baffle plate within the first receptor serving to direct the mixture downwardly, said baffle plate being imperforate adjacent the mouth of the delivery means and being perforated remote therefrom, and means to deliver the oil from the upper portions of said receptors.

2. In an oil separator, the combination of a receptacle comprising a series of receptors having communication each to each at their bottoms, means within the receptacle serving to break up the mass of oil and water, an oil receptacle extending along one side of the first mentioned receptacle adjacent the ends of all of the receptors, each receptor having an opening adjacent its top through which the lighter fluid may flow into the oil receptacle, the several discharge openings being at different elevations from one end of the series to the other, adjustable plates associated with said openings where-

by the effective levels thereof may be variably regulated according to the different characters of fluids being treated, and means to facilitate the movement and discharge of the oil separated from the water.

3. In an oil separator, the combination of a main receptacle, a pipe to deliver a fluid mixture into the receptacle, a downwardly extending deflector against which the fluid is directed as it enters the receptacle, said deflector extending transversely of and beyond said delivery pipe and being imperforate opposite said pipe and perforated at its ends, a sand trap associated with the receptacle below the imperforate portion of said deflector, additional means within the receptacle serving to break up the mixture whereby the lighter portions may be separated from the heavier portions, means to drain off the heavier portions of the fluid in one direction, and means to dispose of the lighter portions in another direction.

4. In an oil separator, the combination of a main receptacle, means to deliver fluid mixture into one end of the receptacle, means within the receptacle serving to break up the mixture to facilitate the separation of the oil from the water, means to permit the outflow of the water from the opposite end of the receptacle, and means to dispose of the oil separated from the water, such oil disposing means including an air inlet at one end of the receptacle communicating with the oil space and an air outlet from another portion of the oil space whereby suitable draft of air is caused through the receptacle, and a horizontal closed heating coil extending from one end of the receptacle to the other above the surface of the fluid therein and on opposite sides of the line joining said air inlet and outlet.

In testimony whereof I have signed my name to this specification in the presence of two subscribing witnesses.

WILLIAM McCLINTOCK.

Witnesses:
GEO. L. BEELER,
PHILIP D. ROLLHAUS.