United States Patent [19]

Buxton

[11] **3,743,891**

[45] **July 3, 1973**

[54] **PLUG-IN RECEPTACLE-CIRCUIT BREAKER DEVICE HAVING UNITARY HOUSING**

[75] Inventor: **Aldon Buxton,** Stone Mountain, Ga.

[73] Assignee: **I-T-E Imperial Corporation,** Philadelphia, Pa.

[22] Filed: **Aug. 9, 1971**

[21] Appl. No.: **169,949**

[52] **U.S. Cl.** ..... **317/119,** 337/1, 200/144 R, 317/112

[51] **Int. Cl.** **H02b 1/04**

[58] **Field of Search** ..... 337/1, 3; 200/144 R; 317/112, 113, 118, 119, 120

[56] **References Cited**

UNITED STATES PATENTS

3,585,456	6/1971	Phillips	317/112
3,369,202	2/1968	Grytko	337/3 X
3,328,553	6/1967	Grytko	200/144 R
2,996,589	8/1961	Myers	337/43
3,120,628	2/1964	Edmunds	317/113 X

Primary Examiner—Herman J. Hohauser
Assistant Examiner—Gerald P. Tolin
Attorney—Sidney G. Faber, Bernard Gerb et al.

[57] **ABSTRACT**

A very flexible electric service panel for temporary hookups is constructed to receive plug-in circuit breakers for direct wiring, as well as four prong receptacle type plug-in power outlet fittings for making cord set connections. The power outlet fitting is constructed by utilizing a hook-like member to mechanically hold a subassembly and a receptacle together as a unitary structure. The subassembly consists of two single pole circuit breakers stacked side by side. The receptacle is adjacent to the load end of the subassembly and electrically connected to the load terminals of the breakers. Plug-in type neutral and grounding connectors at the rear of the receptacle engage forwardly extending legs of neutral and ground busses in the service panel, as plug-in line terminals of the breakers engage energized stabs in the service panel.

15 Claims, 13 Drawing Figures

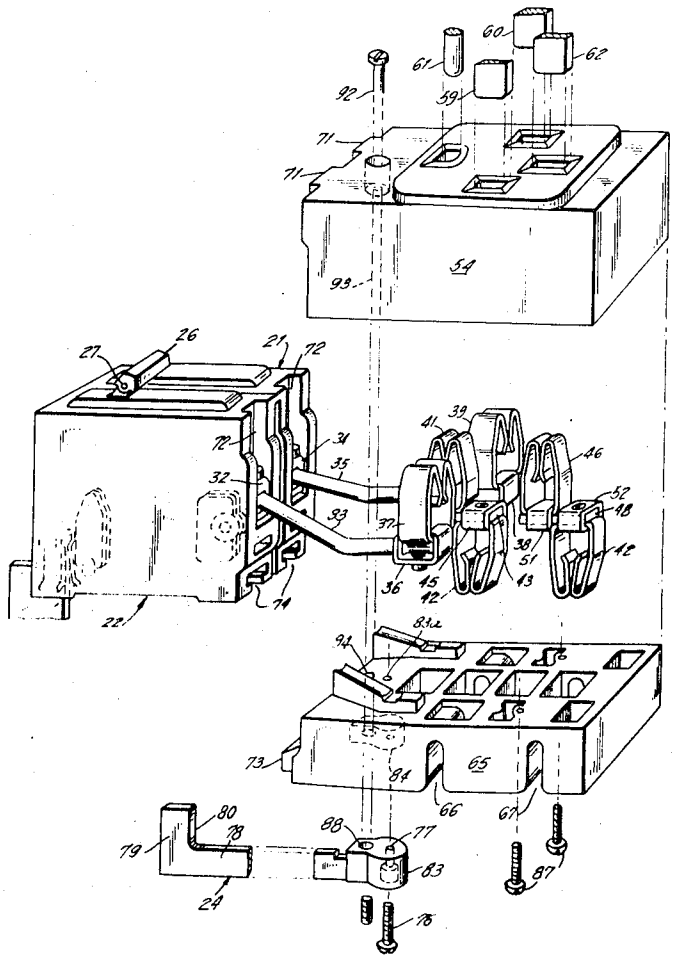

Patented July 3, 1973 3,743,891

7 Sheets-Sheet 1

FIG. 2.

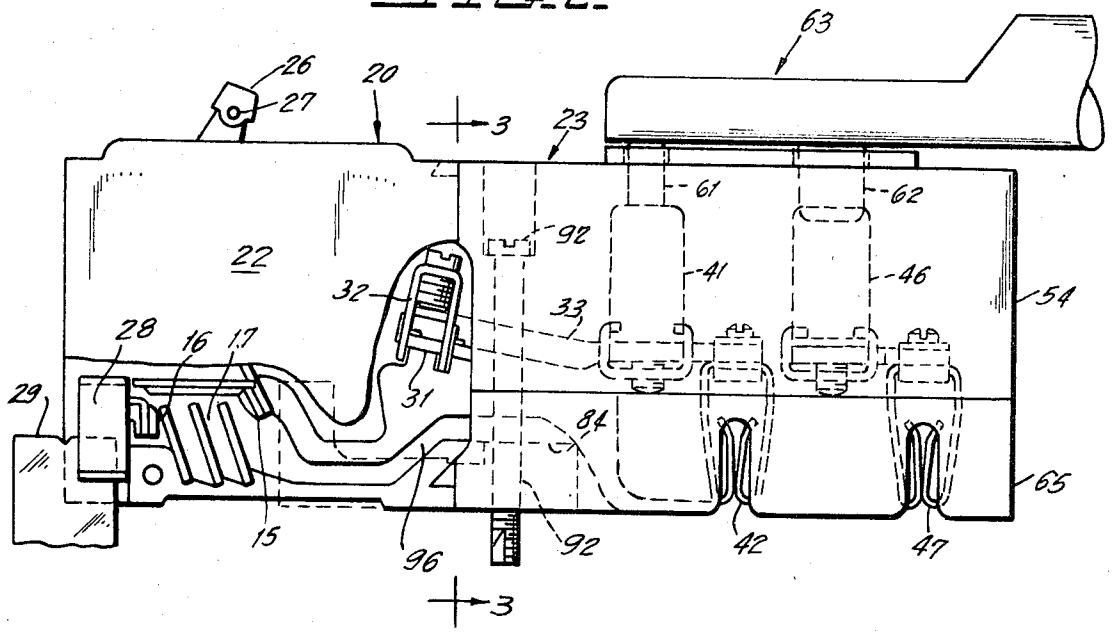

FIG. 1.

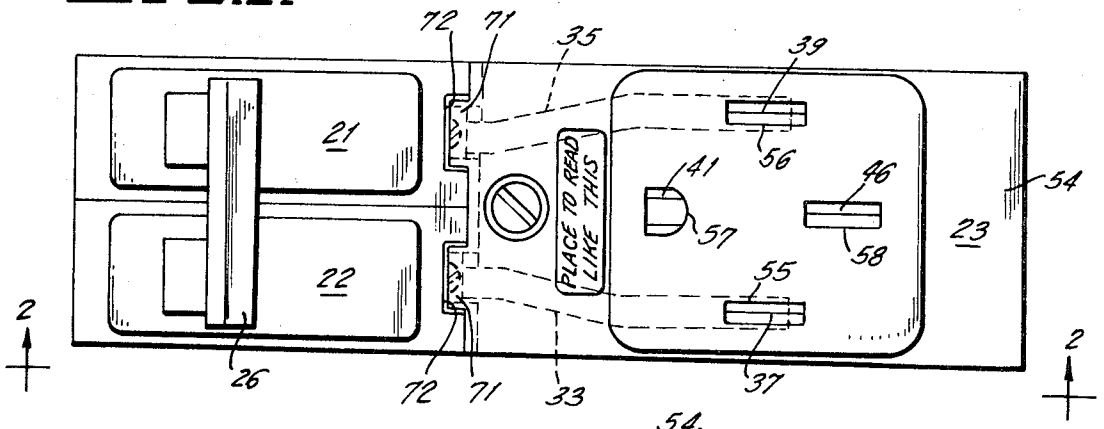

FIG. 6.

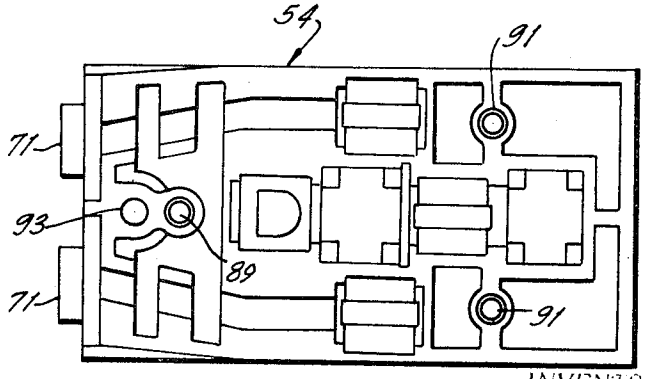

INVENTOR
ALDON L. BUXTON

BY

Ostrolenk, Faber, Gerb & Soffen

ATTORNEYS

FIG. 5.

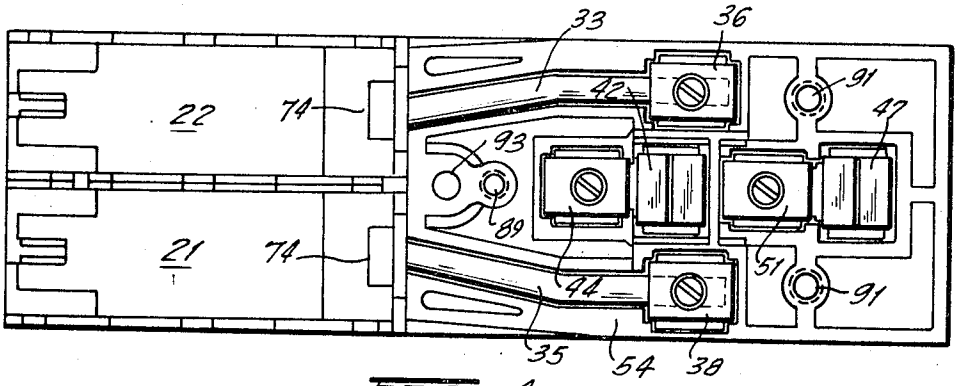

FIG. 4.

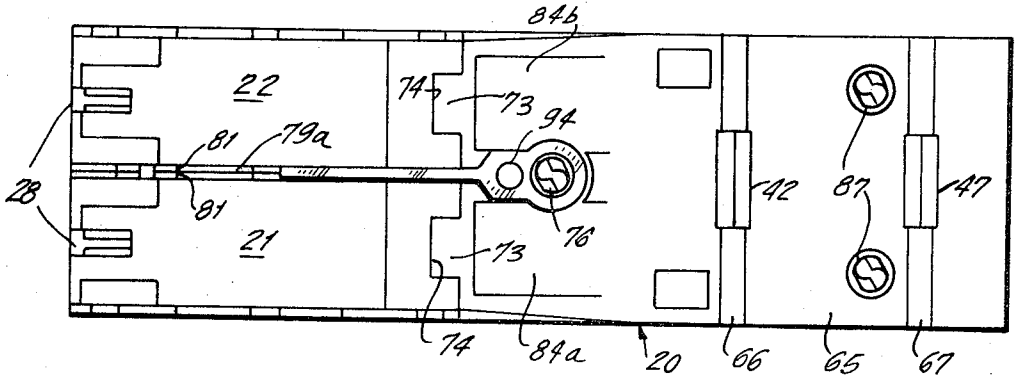

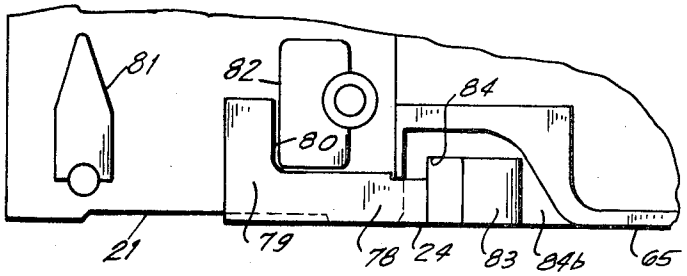

FIG. 7.

FIG. 3.

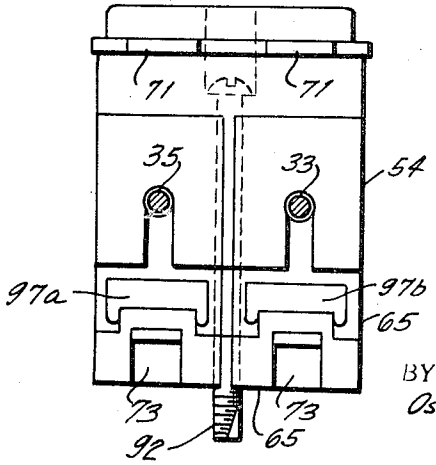

INVENTOR.
ALOON L. BUXTON

BY
Ostrolenk, Faber, Gerb & Soffen

ATTORNEYS

FIG. 8.

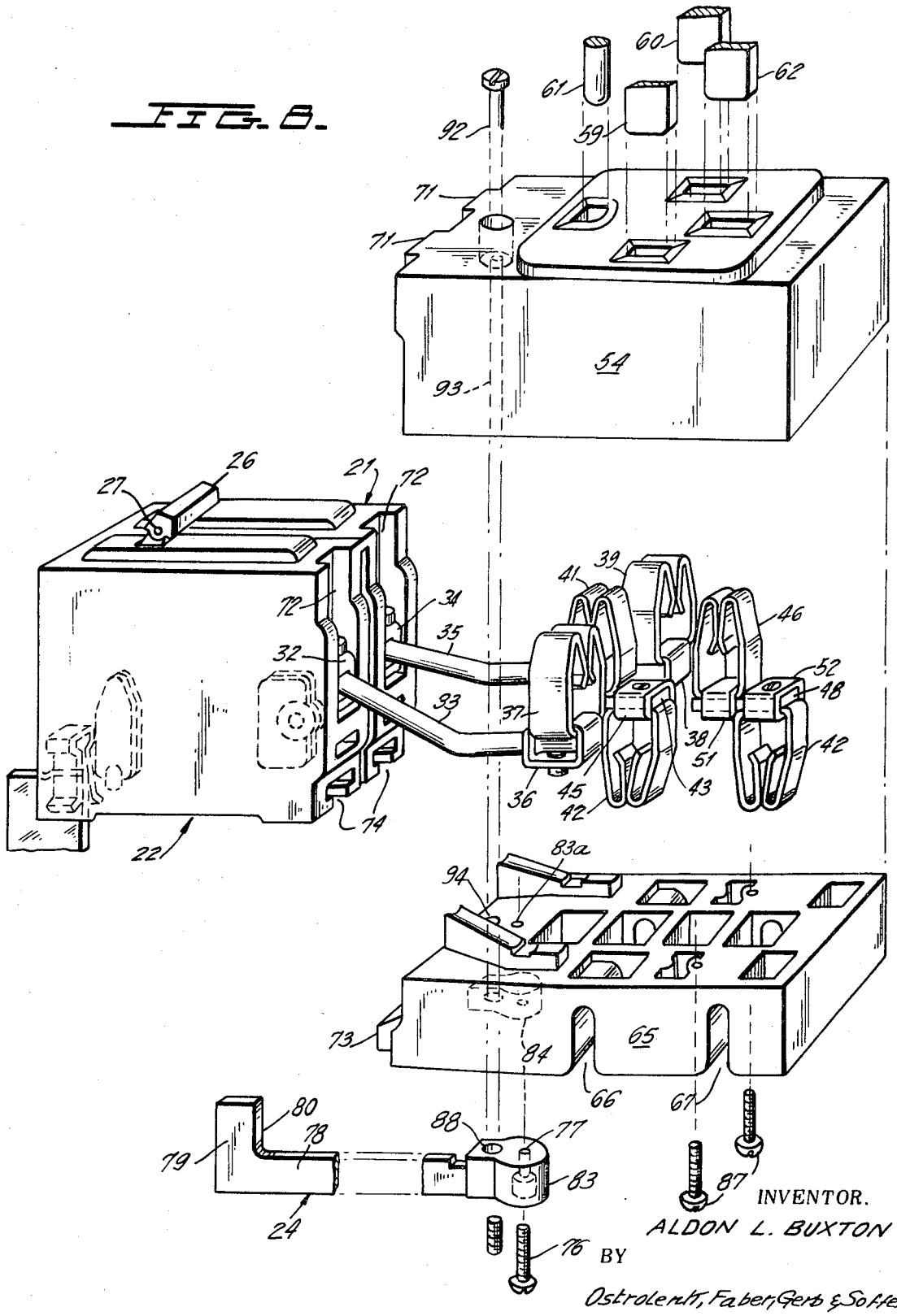

INVENTOR.
ALDON L. BUXTON
BY
Ostrolenk, Faber, Gerb & Soffen
ATTORNEYS

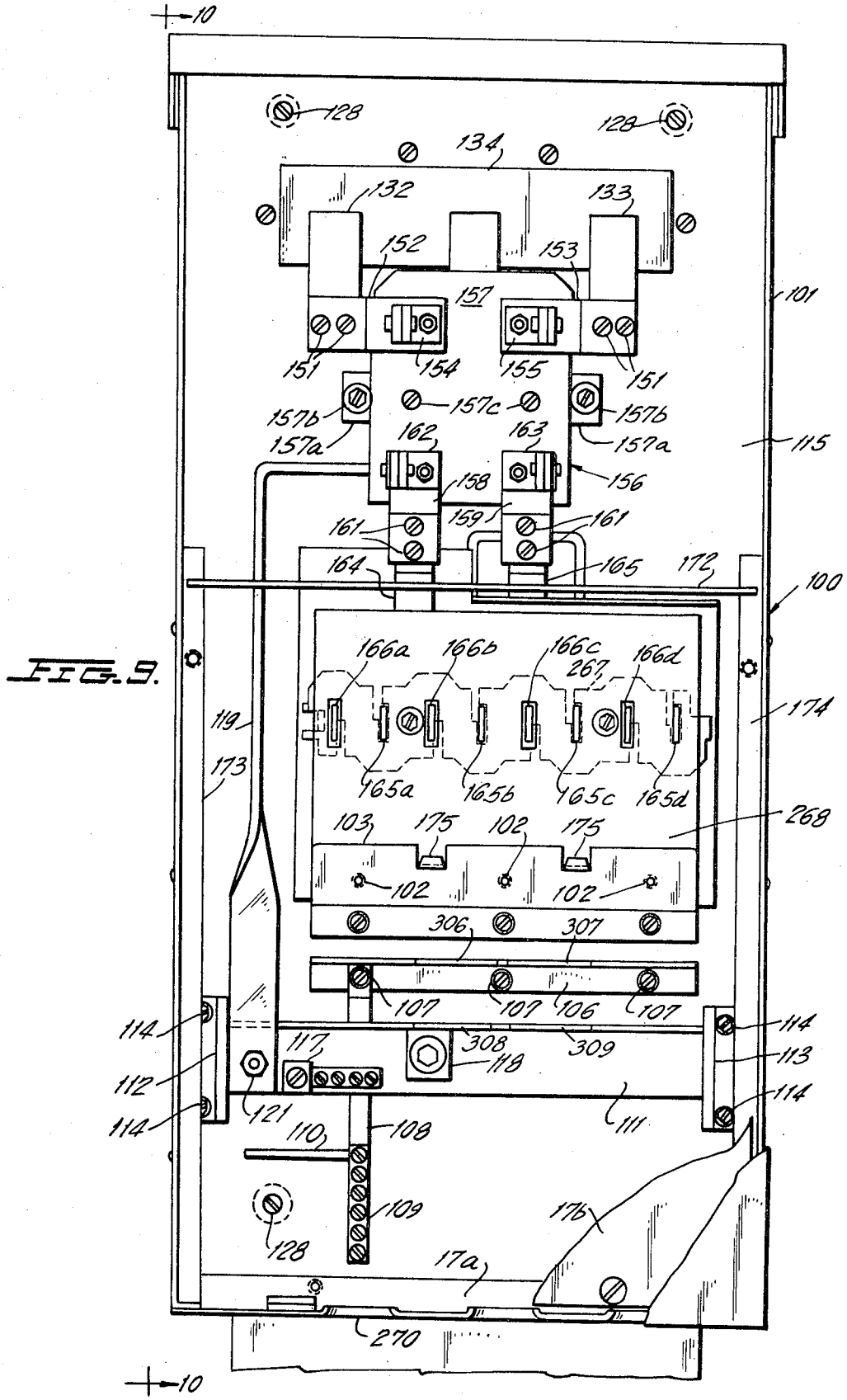
10
128
128
134
132
133
152
153
157
101
151
154
155
151
157b
157c
157b
157a
157a
162
163
115
158
156
159
161
161
164
165
172
100
166a
166b
166c
166d
267
174
119
173
165a
165b
165c
165d
268
103
175
102
175
102
102
102
306
307
107
107
106
107
114
114
117
308
309
113
112
118
114
121
110
108
111
109
176
128
17a
270
10

FIG. 9.

FIG. 10.

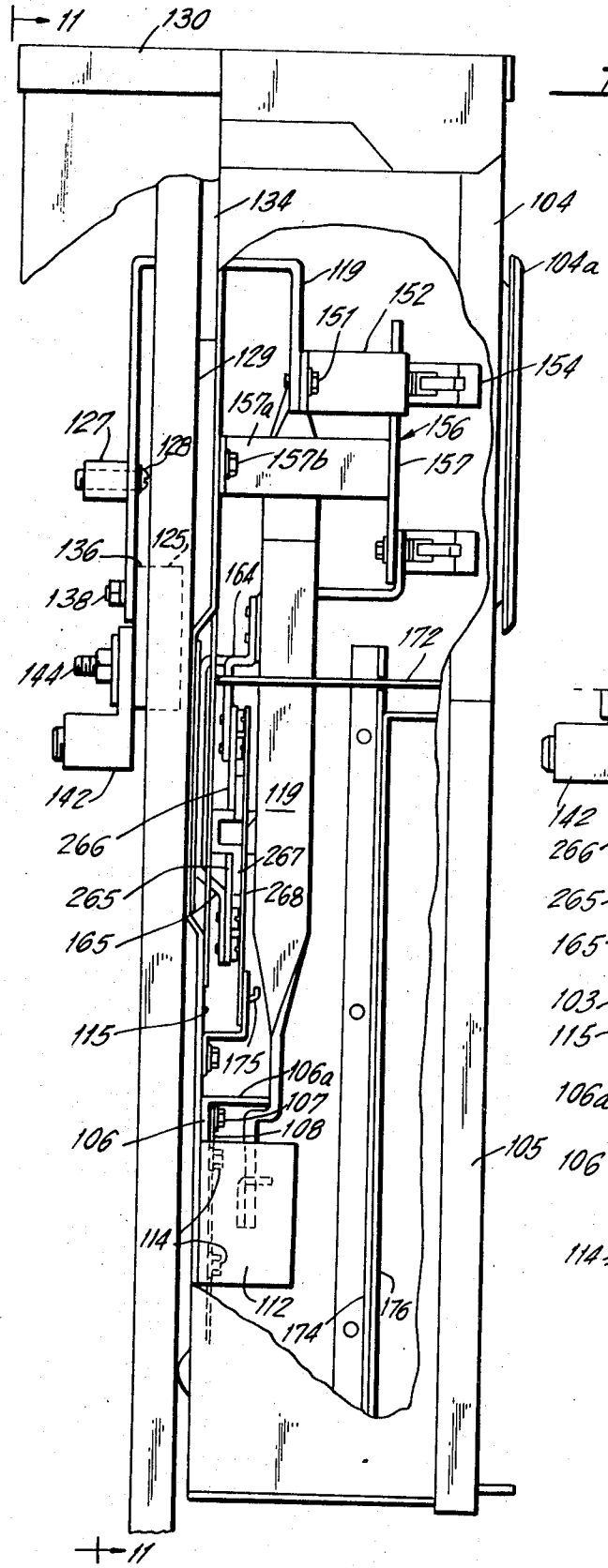
11
130
134
104
104a
119
152
151
129
154
157a
156
127
128
157b
157
136
125
164
138
172
144
142
119
266
267
265
268
165
115
175
106a
107
106
108
105
114
112
174
176
11

FIG. 13.

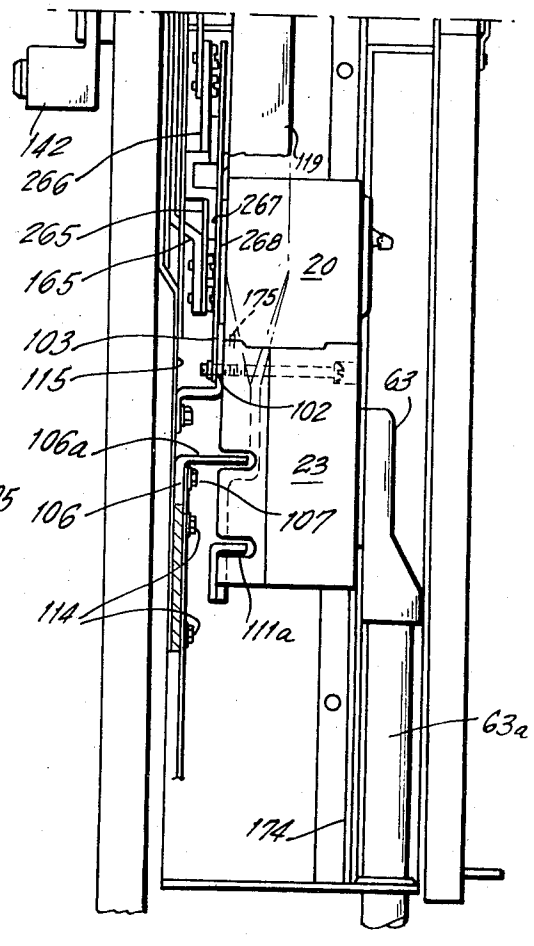
142
119
266
267
265
268
20
165
175
103
115
63
102
106a
23
106
107
114
111a
63a
174

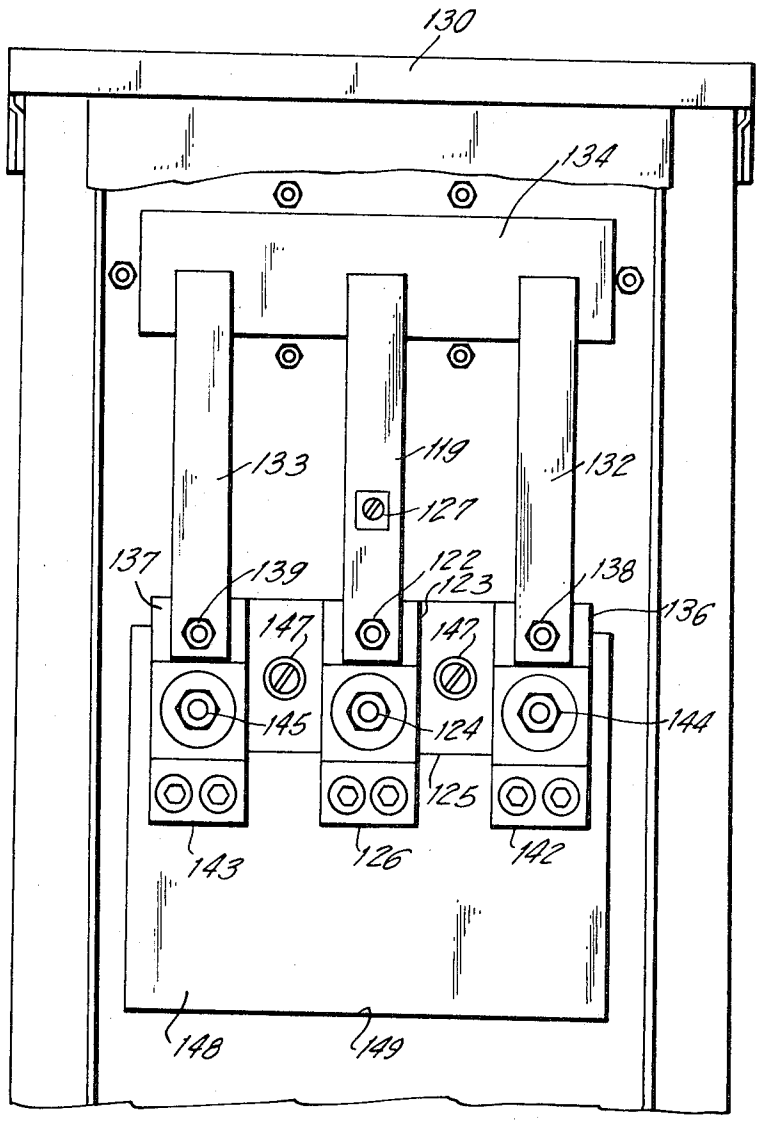

FIG. 11.

INVENTOR
ALDON L. BUXTON

BY
Ostrolenk, Faber, Gerb & Soffen
ATTORNEYS

FIG. 12.

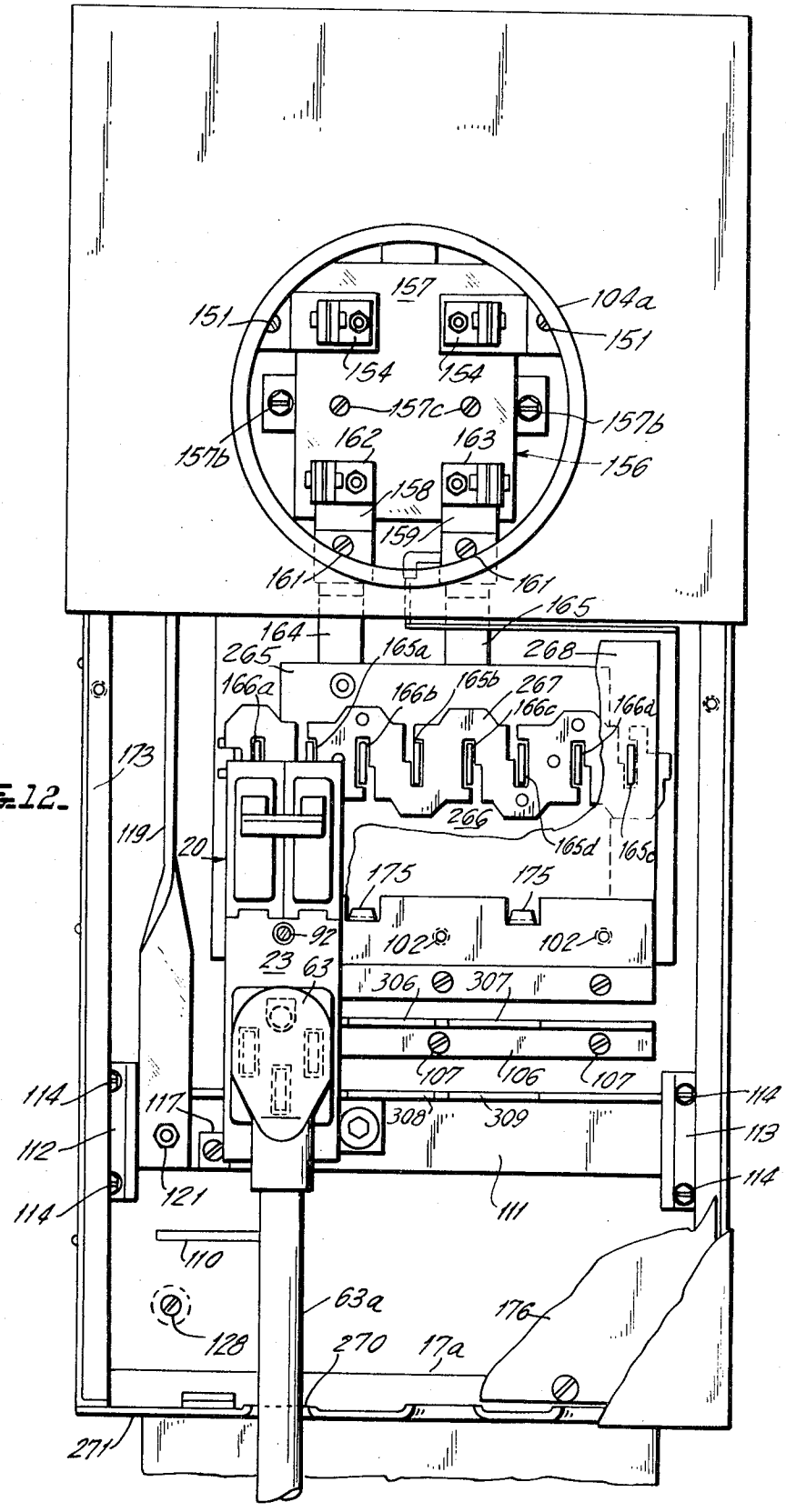
157
151
104a
151
154
154
157c
157b
157b
162
163
156
158
159
161
161
165
164
265
165a
268
166a
166b
165b
267
166c
166d
173
266
165d
165c
119
20
175
175
92
102
102
23
63
306
307
107
106
107
114
117
308
309
114
112
113
121
111
114
110
63a
176
128
270
17a
271

PLUG-IN RECEPTACLE-CIRCUIT BREAKER DEVICE HAVING UNITARY HOUSING

In recent years local regulatory agencies have become more active in setting standards for electric service equipment for temporary hookups as required for boat docks, marinas, trailer parks, and mobile home parks. In particular, such a temporary service panel must be flexible enough so as to readily connect thereto either by utilization of plugs or by direct wiring.

Typically, the equipment in a trailer or mobile home park is called upon as the hookup point for basic electric service requirements in a single phase four-wire system, including a neutral and an equipment ground. For 40 or 50 ampere service the park equipment must accept either a cord set or direct wiring; for 100 ampere service either two 50 ampere cord sets or direct wiring; for 150 ampere service, three 50 ampere cord sets or direct wiring; and for 200 ampere service, direct wiring only. Thus, the park equipment must provide seven alternative service connections. To make matters even more difficult, the park equipment must be factory wired so that only extremely limited field modification may take place, and in particular there is a prohibition against field wiring between receptacles and circuit breakers to achieve interchangeability.

The most flexible prior art approach appears to be one in which plug-in units were provided. Each of these units comprised a relatively large mounting plate carrying circuit breakers and receptacles. These plug-in units were relatively bulky and expensive. In addition, these prior art devices were difficult to manufacture to reasonable dimensional tolerances because of size. Quite often these plug-in units did not operate properly, in that poor connections were made resulting in a floating neutral and/or poor ground integrity especially when screw pressure was used to make connections by forcing abutting steel parts together.

In accordance with the instant invention the trailer or mobile home park is provided with panels having bussing so arranged that plug-in type circuit breaker units of the desired combination may readily be mounted. For direct wiring conventional circuit breakers are mounted in the panel and for cord sets power outlet fittings are mounted in the panel. Each of these power outlet fittings consists of an assembly of two conventional single pole circuit breakers and a receptacle for receiving a four-prong plug. Each of these single pole units is provided with a plug-in type line terminal and the receptacle section is provided with plug-in type neutral and ground terminals.

Accordingly, a primary object of the instant invention is to provide novel flexible electrical service equipment for temporary service requirements.

Another object is to provide a novel construction for a power outlet fitting.

Still another object is to provide a power outlet fitting for receiving a four-prong plug.

A further object is to provide a power outlet fitting comprising an assembly of a receptacle section and two standard single pole circuit breakers.

These objects as well as other objects of this invention will become readily apparent after reading the following description of the accompanying drawings in which:

FIG. 1 is a front elevation of a four-prong receptacle type power outlet fitting constructed in accordance with teachings of the instant invention.

FIG. 2 is a side elevation of the power outlet fitting looking in the direction of arrows 2—2 of FIG. 1.

FIG. 3 is an end view of the power outlet fitting looking in the direction of arrows 3—3 of FIG. 2.

FIG. 4 is a rear elevation of the power outlet fitting.

FIG. 5 is a view similar to FIG. 4 with the receptacle section rear housing part removed.

FIG. 6 is a rear elevation of the front housing part for the receptacle section.

FIG. 7 is a side elevation of the securing insert member showing its operative relationship with adjacent portions of the receptacle section and the single-pole circuit breakers.

FIG. 8 is an exploded perspective showing the main elements of the power outlet fitting of FIGS. 1–7.

FIG. 9 is a front elevation, with the front covers removed, of an electrical panel specially adapted for use in trailer parks and mobile home parks, and capable of utilizing the power outlet fitting of FIGS. 1–8.

FIG. 10 is a side elevation, with housing portions cut away, of the electric panel, looking in the direction of arrows 10—10 of FIG. 9.

FIG. 11 is a rear elevation looking in the direction of arrows 11—11 of FIG. 10 with rear portions of the pedestal cut away to reveal the bussing through which the electric panel of FIGS. 9 and 10 is energized.

FIG. 12 is a view similar to that of FIG. 9 with the upper front cover in place and a power outlet fitting mounted in the panel with a cord set connected to the fitting.

FIG. 13 is a view similar to that of FIG. 10 showing the major elements of FIG. 12.

Now referring to the figures and more particularly to FIGS. 1–8. Four-prong receptacle type power outlet fitting indicated generally by reference numeral 20 comprises single pole circuit breakers 21, 22 and four-prong receptacle 23, secured together by means including hook-like retainer insert 24 (FIGS. 7 and 8) to form a unitary structure.

Circuit breakers 21 and 22 are stacked side by side with cap 26 and rivet 27 mechanically tying the handles of both circuit breakers 21 and 22 together for movement in unison. In addition, circuit breakers 21, 22 have interconnected automatic overload tripping units, so that a fault condition in one of the circuit breakers 21, 22 will automatically cause tripping of both. This construction is illustrated in detail in U.S. Pat. No. b2,996,589 issued Aug. 15, 1961 to F. E. Myers for a "Pivoted Bimetal."

Circuit breakers 21, 22 are identical units, each having a plug-in type line terminal 28, whose jawas are engageable with plate-like stab 29 of a distribution panel. Circuit breaker 22 is also provided with load terminal 31 having wire grip 32 which clamps one end of stiff conductor 33 into firm electrical engagement with load terminal 31. Similarly, wire grip 34 clamps one end of stiff conductor 35 into firm electrical engagement with the load terminal of circuit breaker 22.

Clamp 36 at the other end of conductor 33 clamps blade receiving jaw-type terminal 37 into firm electrical engagement with the right end of conductor 33 as viewed in FIG. 8. Similarly, clamp 38 electrically connects jaw-type terminal 39 to the right end of conductor 35. Jaw-type terminals 41, 42, extending in opposite directions from the plane of conducting bar 43, are connected to opposite ends thereof by the respective clamps 44, 45. Similarly, jaw-type terminals, 46, 47 ex-

tend in opposite directions from the plane of conducting bar **48** and are secured to opposite ends thereof by the respective clamps **51, 52.**

The portions of receptacle housing **54, 65** are held together by one way screws **76, 87, 87** received by threaded apertures **89, 91, 91** in forward housing part **54.** The latter is provided with four plug prong receiving openings **55, 56, 57** and **58,** aligned with terminals **37, 39, 41** and **46,** respectively, so that these terminals will be engaged by the respective prongs **59, 60, 61** and **62** of four-prong plug **63** as these prongs are inserted into receptacle section **23** of power outlet fitting **20.**

Rear molded insulating housing part **65** is provided with parallel transverse slots **66, 67** at the rear thereof. Jaw portions of terminals **42** and **47** extend into the respective slots **66, 67** from the interior of housing **54, 65,** for reasons which will be hereinafter explained. Formations **71, 71** extending to the left from forward housing part **54** are received in complementary recesses **72** at the load end of circuit breakers **21, 22.** Similar locating formations **73, 73** extend to the left from rear housing part **65** into complementary formations **74** at the load end of circuit breakers **21, 22.**

A major portion of the mechanical securing of receptacle section **23** to the subassembly of circuit breakers **21, 22** is accomplished by hook or generally L-shaped retainer insert **24** (FIGS. **4, 7** and **8**) which is fastened to rear housing part **65** by screw **76** which extends through clearance aperture **77** in enlarged cylindrical portion **83** at the right end of insert arm **78** through clearance aperture **83***a* in rear housing part **65,** and is received by threaded aperture **89** in front housing part **54.** The other arm **79** of insert **24** extends into space **79a** between circuit breakers **21, 22** formed by abutting embossments similar to embossments **81, 82** (FIG. **7**). Included surface **80** of retainer arms **78, 79** is adjacent to embossments **82,** cooperating therewith to prevent receptacle section **23** from being moved to the right of subassembly **21, 22.**

Enlargement **83** and the portion of arm **78** to the right thereof rest against recessed ledge **84,** at the rear of housing part **65,** cooperating therewith to form a dividing wall between gas expansion chambers **84***a*, **84***b* (FIG. **4**). These chambers **84***a*, **84***b* communicate with the load end of venting passages **96, 96** (FIG. **2**) in the respective circuit breakers **21, 22** through apertures **97***a*, **97***b*, respectively (FIG. **3**), in rear housing part **65.** Thus, arcing gases formed upon separation of movable contact **15** from stationary contact **16,** in circuit breaker **21,** travel from arc chute **17** through passage **96** and aligned aperature **97***b* into chamber **84***b* where these gases expand and are deflected rearward by the curved wall at the right of chamber **84***b*.

Screw **92** extends through threaded aperture **93** in forward housing part **54,** through clearance aperture **94** in rear housing part **65** and clearance aperture **88** in insert leg **78,** and is threadably received in one of the threaded apertures **102** in the forward leg of Z-shaped mounting ledge **103** of electrical service panel **100** (See FIGS. **9–13**).

Now referring more particularly to FIGS. **9–13,** panel **100** includes generally rectangular housing **101** having upper and lower removable covers **104, 105** at the front thereof. Elongated ground bus **106** extends parallel to and is laterally spaced from transverse circuit interrupter mounting ledge **103.** Screws **107,** extending through the rear leg of ground bus **106,** secure the latter flush against the rear surface of housing **101.** The leftmost screw **107** in FIG. **9** also secures the upper end of grounding strap **108** to bus **106.** Terminal strip **109** and bonding wire **110** are secured to the lower end of grounding strap **108.**

L-shaped neutral bar **111** is positioned below grounding bus **106** and extends parallel thereto. Molded insulating brackets **112, 113** secured to the rear wall of housing **101** by screws **114** engage neutral bus **111** at opposite ends thereof to space the latter forward of rear wall **115** and above brounding strap **108.** Neutral strip **116** and wire grips **117, 118** are mounted to the rear leg of neutral bus **111** on the forward surface thereof. One end of twisted neutral strap **119** is connected by screw **121** to neutral bus **111,** at the left thereof, and the other end is connected by screw **122** to strap **123** (FIG. **11**). Screw **124** connects strap **123** to insulating block **125** positioned adjacent the forward wall of pedestal **130** and also secures wire grip **126** to strap **123.** Another wire grip **127** is mounted by screw **120** to neutral conductor **119** at a portion thereof within pedestal **130.**

A plurality of screws **128** extend through the rear wall of panel housing **101** to secure the latter on forward surface **129** of pedestal **130.** Neutral conductor **119** as well as hot conductors **132, 133** are bent over at right angles at points intermediate their ends, with the horizontal portions of the bends extending between the interiors of housing **101** and pedestal **130** and in doing so extend through insulating gasket **134** sandwiched between the rear of housing **101** and the front of pedestal **130.**

Screws **138, 139** secure the pedestal ends of the respective conductors **132, 133** to the respective straps **136, 137** which are connected by screws **144, 145,** respectively, to insulating block **125.** Screws **144, 145** also secure the respective wire grips **142, 143** to straps **136, 137,** respectively, Screws **147** secure block **125** to insulating sheet **148** covering window **149** in the front wall of pedestal **130.**

The ends of conductors **132, 133** within housing **101** are connected by screws **151** to the respective straps **152, 153** to which plug-in connectors **154, 155,** respectively, of meter block **156** are mounted. The latter includes insulating mounting sheet **157** to which straps **152, 153, 158, 159** are secured in spaced relationship. Brackets **157***a*, secured to the rear wall of housing **101** by screws **157***b*, are connected by screws **157***c* to insulating sheet **157** to support the latter in operative positions spaced forward of housing rear wall **115** and parallel thereto. Housing cover **104** is provided with meter sealing ring **104***a* in front of sheet **157.**

Plug-in connectors **162, 163** are connected to straps **158, 159** which are connected by screws **161** to additional straps **164, 165** respectively, connected to conducting sheets **265, 266** from which the respective stabs **165***a*, **166***a* are formed. Conducting sheet **265** also provides stabs **165***b–d*. Similarly, conducting sheet **266** provides stabs **166***b–d*. The stabs from these respective conducting sheets are interleaved and are disposed in a row parallel to mounting ledge **103** being spaced by rigid insulator **267.** Flexible insulating sheet **268** overlies conducting sheets **265, 266.** The construction of these conducting sheets and the manner in which stabs **165***a–d* and **166***a–d* are maintained in their operative positions and insulated from one another is

described in detail in U. S. Pat. No. 3,349,292 issued Oct. 24, 1967 to J. F. Meacham for "Load Center."

Mounting ledge **103** is provided with a pair of spaced mounting hooks **175, 175,** in line with stabs **165***c* and **166***b*, which are intended to mount a circuit breaker extending over four adjacent ones of the stabs **165***a–d* and **166***a–d*. Such a circuit breaker is illustrated in U. S. Pat. No. 3,573,415 issued Apr. 6, 1971 to C. E. Gryctko for a Parallel Pole Circuit Breaker.

The forward edge of ground bus **106** is provided with notches **306, 307** (FIG. **9**), and the forward edge of neutral bus **111** is provided with notches **308, 309,** with notches **306, 308** being aligned with one mounting hook **175** and notches **307, 309** being aligned with the other mounting hook **175.**

The portion of housing **101** containing meter block **156** is separated from the remainder of housing **101** by transverse insulating sheet **172** which is appropriately notched to fit over bus elements **119, 164, 165** etc. and is held in operative position by fitting into notches at the upper ends of ledges **173, 174** which extend inward of housing **101** partway along the sides thereof. These ledges **173, 174,** in combination with another legde **17***a* extending inwardly of housing **101** along the bottom thereof, support face plate **176** which provides a dead front over the hot bussing in the region where load connections are to be made.

When panel **100** is to be used, from one to three power outlet fittings **20** may be mounted therein. As seen in FIG. **12,** one power outlet fitting **20** is mounted so that the circuit breaker sections **21, 22** engage the leftmost stabs **165***a*, **166***a*. The left-most portion **106***a* (FIG. **9**) of the forwardly extending leg of ground bus **106** is clamped between the jaws of receptacle section grounding contact **42** (FIG. **13**) and the forwardly extending portion **111**a at the left of neutral bus **111** is engaged by the jaws of neutral contact **47** in receptacle section **23.** The prongs of four-prong plug **63** are inserted into receptacle section **23,** and flexible cable **63***a* connected to plug **63** extends downward through the leftmost notch **207** in the bottom wall **271** of housing **101.** In accordance with practices well known to the art of distribution panels, all of those notches in face plate **176** that are not covered by a power outlet fitting **20** or other circuit interrupter, are covered with snap-in type dummies to preserve the integrity of the dead front. It is noted that the spacing between mounting hooks **175, 175** is sufficient to permit a single power outlet fitting **20** to be mounted with the line terminals thereof in engagement with stabs **165***b* and **166***c*.

For direct wiring, neutral connections are made to wiring devices **116–118** and ground connections are made to terminal strip **109.** The hot wire connections are made to two-pole circuit breakers secured by one or both of the mounting hooks **175, 175.** Such circuit breakers may be rated up to 100 amps per pole and are of the type illustrated in the aforesaid U. S. Pat. No. 2,996,589. In ratings between 100 and 200 amps the circuit breakers are of the type illustrated in the aforesaid U. S. Pat. 3,573,415.

Thus, it is seen that this invention provides a novel construction for a receptacle type power outlet fitting comprising a plurality of coordinated single pole circuit breakers connected as a sub-assembly, and a receptacle section having ground and neutral terminals. The sub-assembly and receptacle section are connected end to end as a unitary mechanical structure interconnected electrically. While this invention has been described in connection with a three wire single phase system, it should now be apparent to those skilled in the art that teachings of the instant invention may be utilized for three phase and other multiphase applications.

Although there have been described preferred embodiments of this novel invention, many variations and modifications will now be apparent to those skilled in the art. Therefore, this invention is to be limited not by the specific disclosure herein, but only by the appending claims.

The embodiments of the invention in which an exclusive privilege or property is claimed are defined as follows.

1. A power outlet device removably mountable in an electric power distribution panel, said device including a receptacle section, a first circuit breaker section, and a second circuit breaker section; unitary generally block-like molded insulating housing means for said sections; said circuit breaker sections being positioned side by side and having a manual operating handle connection extending forward of said housing means for manually operating both of said circuit breaker sections to open and closed positions at the same time; said receptacle section being positioned adjacent one end of said circuit breaker sections in abutting relation therewith; each of said circuit breaker sections having a line terminal disposed at the other end thereof; said other end being at an end of said housing means remote from said receptacle section; said receptacle section including first, second, third and fourth elements aligned with respective first, second, third and fourth openings in the front of said housing means to be engaged by plug prongs, of a single plug, inserted into said receptacle section through said openings; electrical connections within said housing means directly connecting said first and second elements to said first and second circuit breaker sections, respectively, at their first ends; third and fourth plug-in type neutral and grounding terminals connected to said third and fourth elements, respectively, and accessible for engagement from the rear of said housing means.

2. A power outlet device as set forth in claim **1** in which the housing means includes individual molded housings for the respective first and second circuit breaker sections which are connected to form a sub-assembly; and retainer means mechanically connecting said sub-assembly to said receptacle section to form a unitary structure.

3. A power outlet device as set forth in claim **2** in which the retainer means includes a retainer member fastened to one of said sub-assembly and said receptacle section and providing a hook-like blocking means cooperating with formations of the other of said sub-assembly and said receptacle section.

4. A power outlet device as set forth in claim **3** in which one end of the retainer member is fastened directly to the receptacle section and the hook-like blocking means, disposed at the other end of the retainer member, the housings of the circuit breaker sections.

5. A power outlet device as set forth in claim **4** in which the retainer member is disposed within the region bounded by said housing means.

6. A power outlet device as set forth in claim **3** in which the housing means for both of said circuit breaker sections and said receptacle section are pro-

vided with complementary interengaging formations for operatively locating said sub-assembly relative to said receptacle section.

7. A power outlet device as set forth in claim **2** in which each of said circuit breaker sections is an individually housed single pole unit of identical construction having automatic overload trip means.

8. A power outlet device as set forth in claim **7** in which there is a means tying said circuit breaker sections together so that automatic tripping of one of said circuit breaker sections due to an overload in this section will cause the other of said circuit breaker sections to open.

9. A power outlet device as set forth in claim **1** in which the first element, the second element, the neutral terminal and the grounding terminal are of substantially the same size and construction including a pair of jaws for engaging a conductor therebetween.

10. A power outlet device as set forth in claim **1** in which each of said circuit breaker sections includes an opening at said one end for venting of arcing gases; said housing of said receptacle section having chamber means at the rear thereof communicating with said openings of said circuit breaker sections.

11. A power outlet device as set forth in claim **1** in which each of the line terminals is of a plug-in type construction.

12. A power outlet device removably mountable in an electric power distribution panel; said device including a receptacle section and a circuit breaker section; a unitary housing structure including a relatively narrow housing portion for said circuit breaker section a line terminal at one end of said housing portion and a load terminal at the other end of said housing portion; means securing said sections togehter with said load terminal adjacent said receptacle section; said receptacle section including first, second, and third plug prong engaging elements, said unitary housing structure also including anohter housing portion for said receptacle section, said elements being disposed with in said another housing portion in alignment with prong receiving openings in a front surface of said another housing portion, first and second plug-in type connectors supported by said another housing portion at the rear thereof and electrically connected to the respective first and second elements; and means disposed within said housing structure and electrically connecting said load terminal to said third element; said housing portion for said circuit breaker section being no wider than half the width of said another housing portion of the receptacle section; said another housing portion at the rear thereof being provided with first and second transverse parallel slots; said first and second connectors extending into the respective first and second slots where they are accessible for engagement with respective ground and neutral conductors of an electric distribution panel.

13. A power outlet device as set forth in claim **12** in which the transverse parallel slots extend the full width of the another housing portion.

14. A power outlet device as set forth in claim **12** in which each of the connectors is of female plug-in type construction.

15. A power outlet device as set forth in claim **12** in which said line terminal is of a plug-in type construction and said housing portion at the rear corner thereof remote from the receptacle section is provided with slot means aligned with said line terminal; said slot means being in a plane perpendicular to said slots.

* * * * *