(19) Europäisches Patentamt
European Patent Office
Office européen des brevets

(11) Publication number: **0 206 656 B1**

(12) EUROPEAN PATENT SPECIFICATION

(45) Date of publication of patent specification: **29.12.93** (51) Int. Cl.5: **H03M 1/24**

(21) Application number: **86304499.6**

(22) Date of filing: **12.06.86**

(54) Optical encoder.

(30) Priority: **19.06.85 US 747084**

(43) Date of publication of application:
30.12.86 Bulletin 86/52

(45) Publication of the grant of the patent:
29.12.93 Bulletin 93/52

(84) Designated Contracting States:
DE FR GB IT SE

(56) References cited:
GB-A- 2 100 423
US-A- 3 531 798
US-A- 3 729 621
US-A- 3 757 128

ELECTRONIC ENGINEERING, vol. 32, no. 388, June 1960, pages 359-635, London, GB; I.R. YOUNG: "The design of optical instruments"

(73) Proprietor: **Hewlett-Packard Company**
P.O. Box 10301
3000 Hanover Street
Palo Alto California 94303-0890(US)

(72) Inventor: **Leonard, Mark G.**
663 Berry Avenue
Los Altos California 94022(US)

(74) Representative: **Colgan, Stephen James et al**
CARPMAELS & RANSFORD
43 Bloomsbury Square
London WC1A 2RA (GB)

Note: Within nine months from the publication of the mention of the grant of the European patent, any person may give notice to the European Patent Office of opposition to the European patent granted. Notice of opposition shall be filed in a written reasoned statement. It shall not be deemed to have been filed until the opposition fee has been paid (Art. 99(1) European patent convention).

Rank Xerox (UK) Business Services
(3.10/3.6/3.3.1)

Description

Optical encoders resolve the position and movement of a rotating shaft as described in U.S. Patents Nos. 4,266,125 and 4,259,570. These prior-art optical encoders modulate a light beam with a code wheel that is mounted to the shaft and with a stationary phase plate. The modulated light beams are coverted into electrical signals by light detectors. From these electrical signals, the speed and direction of the shaft rotation can be ascertained.

Prior-art optical encoders have numerous parts as shown in Figure 1. These include light emitting diodes (LEDs), lenses for collimating the light beams, a code wheel mounted on the shaft for modulating the light beams, a phase plate for splitting the light beams and for introducing a phase difference of 90° between them, elaborate lenses, and light detectors for receiving the modulated light and converting it into electrical signals. Some of these parts are cumbersome to manufacture such as the bifurcated, truncated lenses for light detectors. The prior-art encoders have multiple sources of errors. The light beams emitted from the multiple LEDs may not be identical and the code wheel and the phase plate may not be aligned. Also, the distance between light detectors renders them sensitive to gradients in the light beams.

A typical prior art optical encoder is described in GB-A-2100423, in which an annular code track on a code disc mounted on the encoder is illuminated by a light emitting diode. Two phase plates, having precision optical slits are required in order to provide sinusoidal outputs as the code disc rotates. Groups of slits are aligned with respect to the code track so as to be spaced a number of cycles plus 180 cycle degrees from each other. Each of two spaced phototransistors is illuminated in turn so as to produce a sine signal. A cosine signal is produced in a similar manner by spacing the slits a number of cycles plus 90 degrees apart. Signal processing using a quadrant switched multiplier is then required in order to produce high resolution quadrature signals. It can thus be seen that precise alignment of the light source and phase plates is critical and extensive signal processing are required if an error-free output is to be obtained.

US-A-3729621 describes the established technique of providing a signal from relative movement between two members by encoding and counting.

According to the invention, there is provided an optical encoder for indicating the rotational movement of a shaft or the linear movement of an object, comprising: an emitter means for emitting a light beam along a light path; a light modulation means comprising an optical track positioned to cross the light path, the optical track having alternating transmissive and non-transmissive sections for modulating the light beam in response to the movement; and a detector means, positioned in the light path, for receiving the light beam uninterrupted from the light modulation means and for generating more than one output signal in response to the movement, wherein the output signals have substantially the same shape and are delayed from each other in phase by approximately integer multiples of 360° divided by the number of output signals; wherein the light modulation means is concentrically attached to the shaft for rotational movement, or located next to the emitter means for linear movement of the object; the detector means comprises individual light detectors located immediately adjacent to one another and arranged into groups, and having an output for generating one of the output signals; and each group of light detectors has substantially the same dimensions as one transmissive section plus one non-transmissive section.

The optical encoder according to the invention has fewer parts, is therefore simpler and cheaper to manufacture, and has greater accuracy than prior-art encoders. The optical encoder has one light source producing one light beam, a simple lens for collimating the light beam, a code wheel for modulating the light beam, and light detectors for receiving the light beam and including the function of the phase plate. By reducing the number of parts and making them easier to fabricate, the manufacturing procedure is simpler and cheaper. Greater accuracy is achieved by using a single light source instead of multiple light sources. Also, the light detectors are placed immediately adjacent to one another, and each light detector receives information belonging to two channels. Furthermore, the light detector outputs are connected in a four-way push-pull configuration which cancels errors due to gradients in the light beam and misalignment of the code wheel.

Figure 1 shows a prior-art optical encoder.

Figure 2A shows an optical encoder constructed in accordance with the preferred embodiment of the invention.

Figure 2B shows a side view of the optical encoder shown in Figure 2A.

Figure 3 is a cross-sectioned drawing of the optical encoder module shown in Figures 2A and 2B with a code wheel inserted therein.

Figure 4 is a detailed view of the code wheel shown in Figures 2A and 2B.

Figure 5A shows the relative dimensions of the light detectors and code wheel transmissive sections shown in Figure 4.

Figure 5B shows the light detectors shown in Figure 5A with dummy photodiodes attached to each end of the array.

Figure 6A shows four light detectors, shown in Figure 5A, and their outputs.

Figure 6B shows eight light detectors, like those shown in Figure 5A, connected together forming four light detector outputs.

Figure 7A shows the four output signals, shown in Figures 6A and 6B, in relation to the position of the transmissive and non-transmissive sections of the code wheel. T equals one cycle of the light detector output signals and the time required for one transmissive section to move across four light detectors.

Figure 7B shows the outputs of the summers and comparators, shown in Figure 8, in relation to the four output signals shown in Figure 7A.

Figure 8 shows how the four light detector output signals in Figure 7A, are processed into various waveforms.

Figure 9 shows the circuitry that prepares the light detector output signals, shown in Figure 7A, for the summers and comparators shown in Figure 8.

Figure 10 shows an alternate embodiment of the optical encoder, shown in Figures 2A-2B, having groups of six light detectors instead of four.

Figure 11A shows an alternate embodiment of the encoder shown in Figures 2A-2B where a code strip is used to determine position along a line.

Figure 11B shows a detailed view of the code strip shown in Figure 11A.

Figure 12A shows an alternate embodiment of the code wheel optical track and light detector configuration for producing an index pulse.

Figure 12B shows the output signals of the light detectors shown in Figure 12A and the index pulse formed from them.

Detailed Description of the Preferred Embodiment

The preferred embodiment of the invention is illustrated in Figures 2A-2B and 3. A module 1 provides a collimated light beam and has light detectors 7 to receive the light beam after it has been modulated by the code wheel 3. The function of the phase plate, found in prior-art optical encoders shown in Figure 1, is included in the configuration of the light detectors 7. The light detector output signals $A\overline{B}$, AB, $\overline{A}B$, and $\overline{A}\overline{B}$, shown in Figure 7A, are in quadrature, that is they are identically shaped and are 90° out-of-phase with each other. Also, each signal contains information belonging to two channels. These output signals are processed by summing and comparator circuitry, shown in Figure 8, to form two separate channels that are responsive to the rotation of the shaft 5.

Module

Module 1 produces one light beam. An LED 9, shown in Figure 3, provides light having a wavelength of approximately 700 nanometers. However, any frequency of electromagnetic radiation having a wavelength substantially shorter than the relevant dimensions of the encoder could be utilized in the present invention if suitable lens materials, emitters and detectors are available. An emitter lens 11 is positioned to receive the light from the LED 9 and to provide one collimated beam of light.

Code Wheel

The code wheel 3 is concentrically mounted on the shaft 5, shown in Figures 2A-2B, to rotate with the shaft 5 and to modulate the light beam with its optical track 17. The optical track 17 has alternating transmissive sections 13 and non-transmissive sections 15 of equal width as shown in Figure 4. One transmissive section 13 and one non-transmissive section 15 make up one pitch of the code wheel.

In the preferred embodiment, there are 500 transmissive sections 13 and an equal number of non-transmissive sections 15. The transmissive sections 13 and the non-transmissive sections 15 have a trapezoidal shape since they are located immediately adjacent to one another on a circular track. The maximum width of the transmissive sections is 114 microns, the minimum width is 104 microns, and the height is 1650 microns. The code wheel 3 is made of an optically opaque material, such as stainless steel, and has a diameter of approximately 37.338 mm. The transmissive sections can be formed in several different ways including a masking and etching process.

Light Detectors

In the preferred embodiment, there are 7 groups of the four light detectors 7a-d shown in Figure 5. A group of four light detectors must have approximately the same size and shape as one transmissive section 13 and one non-transmissive section 15. Therefore, individual light detectors 7a-d have a trapezoidal shape with a maximum width of approximately 48 microns, a minimum width of approximately 45 microns, and a height of 785 microns. The width of two individual light detectors is slightly less than the width of one transmissive section because there is an 8 micron gap between the individual light detectors. The height of the the transmissive sections 13 is greater then that of the light detectors 7 so that the transmissive sections 13 overlap the light detectors 7. With this overlap,

the optical encoder can operate when the code wheel 3 is out of alignment. The light detectors 7 are photodiodes formed using standard bipolar semiconductor technology. However, the light detectors can be manufactured using other types of technology without departing from the scope of the invention. As illustrated in Figure 5A, the groups of light detectors 7 are placed in a one dimensional array as close to one another as the bipolar semiconductor technology will allow. Dummy photodiodes 10 and 12, shown in Figure 5B, are located on each end of the array to minimize the effect of stray light on the functioning light detectors 7a-d.

The width of each individual light detector 7a-d is equal to half the width of one transmissive section 13 as shown in Figure 5. The light detectors 7 are arranged in groups of four. Each group of four light detectors 7a-d has the same dimensions as one transmissive section 13 plus one non-transmissive section 15, and corresponds to one pitch of the code wheel 3. Furthermore, light detectors 7a-d are interdigitated, as shown in Figure 5A, such that they are immediately adjacent to one another and receive information belonging to two channels. Each of the light detectors 7a-d produces one output signal as shown in Figure 6A.

Figure 7A shows one complete cycle of the output signals of the individual light detectors 7a-d. The output signal $A\overline{B}$ is produced by light detector 7a, output signal AB is produced by light detector 7b, output signal $\overline{A}B$ is produced by light detector 7c, and output signal $\overline{AB}$ is produced by light detector 7d. They have the same shape and period, but they are offset from one another by multiples of 90°. The period of an output signal equals the time required for one transmissive section 13 and one non-transmissive section 15 to move over that individual light detector. Each cycle of an output signal corresponds to one pitch of the code wheel.

The light beam from the LED 9 shines on the light detectors 7a-d through the transmissive sections 13 of the rotating code wheel 3. This results in columns of light, that have a cross-sectional area equal to the area of one transmissive section 13, moving across the light detectors 7a-d. The outputs of light detectors 7a-d vary in amplitude according to the amount of light incident upon them.

As the transmissive section 13, shown in Figure 7A, of the code wheel 3 moves to the right and away from the light detector 7a, the $A\overline{B}$ output signal decreases in amplitude linearly for one quarter cycle until that transmissive section 13 has separated from the light detector 7a. At this point, the $A\overline{B}$ output signal is zero for one quarter cycle because the non-transmissive section 15 blocks all light from the light detector 7a. At the end of the second quarter cycle, another transmissive section 13 begins to pass over the light detector 7a and the amplitude of the $A\overline{B}$ output signal increases linearly in response to the increasing light intensity until the light detector 7a is completely covered by a transmissive section 13 at the completion of the third quarter cycle. During the fourth quarter cycle, the $A\overline{B}$ output signal remains at its peak amplitude as the transmissive section 13, having twice the width of one light detector, continues to transmit the light beam to the light detector 7a. After completion of the fourth quarter cycle, the sequence is repeated.

The formation of the AB output signal is identical to that of the $A\overline{B}$ output signal except that the light detector 7b is located differently relative to the code wheel 3. The light detector 7b is located one light detector to the right of the light detector 7a as shown in Figure 7A. This layout of light detectors 7a-d results in the AB output signal having the same shape and period as the $A\overline{B}$ output signal but being delayed by one quarter cycle or 90° from the $A\overline{B}$ output signal. Likewise, the light detector 7c is located two light detectors to the right of the light detector 7a, and produces the $\overline{A}B$ output signal which has the same shape and period as the $A\overline{B}$ output signal but is delayed by one half cycle or 180° from the $A\overline{B}$ output signal. The $\overline{AB}$ output signal from the light detector 7d is identical to the $A\overline{B}$ output signal except that it is delayed by three quarter cycles or 270° from the $A\overline{B}$ output signal because it is located three light detectors away. From this physical layout the four output signals $A\overline{B}$, AB, $\overline{A}B$, and $\overline{AB}$ are quadrature signals. That is, they have the same shape and period; but are delayed by multiples of 90° from each other.

When the output signals of two or more light detectors are identical, they can be connected together as shown in Figure 6B. Output signals for light detectors 7a and 8a are identical because they are placed one pitch of the code wheel 3 apart. That is, the distance between 7a and 8a equals the width of one transmissive section 13 plus one non-transmissive section 15 as illustrated in Figure 6B. Light detector sets 7b and 8b, 7c and 8c, and 7d and 8d are placed one pitch of the code wheel 3 apart and always have the same amount of light incident upon them. Therefore, their outputs will always be equal and they can be connected together to produce a higher power output signal for processing by the circuitry. Figure 6B shows two groups of light detector 7a-d and 8a-d separated by one pitch of the code wheel 3 and having their outputs connected together.

The count of the optical encoder module 1 may be changed without departing from the scope of the invention. The count is the number of cycles the four output signals $A\overline{B}$, AB, $\overline{A}B$, and $\overline{AB}$ go

through in one revolution of the shaft 5. Higher counts permit finer control of the shaft 5 rotation. In some embodiments such as a daisy wheel printer, a particular count is required. The count is changed by increasing or decreasing the number of transmissive sections 13 on the code wheel 3. This causes the dimensions of the transmissive sections 13 and light detectors 7 to change accordingly. When the width of the transmissive sections 13 and the individual light detectors 7a-d are reduced, the amplitude of the output signals $A\overline{B}$, AB, $\overline{A}B$, and $\overline{AB}$ are decreased and they may be too small for processing by the circuitry. By increasing the number of light detectors 7 groups and coupling their outputs together, higher power output signals $A\overline{B}$, AB, $\overline{A}B$, and $\overline{AB}$ will be formed. Likewise, if the size of the light detectors 7a-d and the transmissive sections 13 are increased, it may be possible to reduce the number of light detectors. All of this can be done without departing from the scope of the invention.

The Processing Circuitry

The optical encoder module 1 has a two channel output. The speed of the shaft 5 rotation can be determined from one channel, but two channels are needed to determine the direction of the shaft 5 rotation. Each light detector output $A\overline{B}$, AB, $\overline{A}B$ and $\overline{AB}$ contains information belonging to these two channels. Figure 8 shows how these signals are separated into two channels. Light detector outputs $A\overline{B}$ and AB are added by summer 17 to produce signal 2A which is shown in Figure 7B. Summer 19 adds $\overline{A}B$ and $\overline{AB}$ to produce $2\overline{A}$ also shown in Figure 7B. Summer output signals 2A and $2\overline{A}$ are compared by a comparator 25 to produce the Channel A Logic Output shown in Figure 7B. Likewise, another summer 21 adds $\overline{A}B$ and AB to produce 2B shown in Figure 7B. Another summer 23 adds $\overline{AB}$ and $A\overline{B}$ to produce $2\overline{B}$ shown in Figure 7B. A comparator 27 shown in Figure 8 compares the summer outputs 2B and $2\overline{B}$ to produce Channel B Logic Output signal shown in Figure 7B. This circuitry is described and claimed in U.S. Patents Numbers 4,271,364 and 4,259,570. There are many different ways to process the summer output signals 2A, $2\overline{A}$, 2B, and $2\overline{B}$ without departing from the scope of the invention. For example, an alternate embodiment of the invention produces analog output signals for channels A and B that indicates the position of the code wheel 3. The circuitry for producing this alternate embodiment is described in U.S. Patent Number 4,259,570.

Figure 9 shows the circuitry used to prepare the light detector outputs $A\overline{B}$, $\overline{A}B$, AB, and $\overline{AB}$ for the summers 17, 19, 21, and 23. In the preferred embodiment, each light detector 7a-d is connected between a reference voltage and a preamp input. The preamps 41, 43, 45, 47 perform a logarithm operation on the light detector output signals to produce the preamp outputs. These preamp output signals are connected to the bases of transistors 51, 53, 55, 57 that comprise two differential amplifiers. One differential amplifier 61 amplifies preamp output signals $A\overline{B}$ and $\overline{A}B$ exponentially. The differential amplifier 61 output signals have the same current ratio as light detector output signals $A\overline{B}$ and $\overline{A}B$, but their sums must equal the output of the current source 71. Likewise, a second differential amplifier 63 amplifies preamp output signals AB and $\overline{AB}$ exponentially. These signals have the same current ratio as light detector output signals AB and $\overline{AB}$, but their sums must equal the output of current source 73.

The current mirrors 29 in Figure 9, replicate these current signals to provide inputs for the summers 17, 19, 21, and 23.

Alternate Embodiments

The preferred embodiment arranges light detectors 7a-d and 8a-d in groups of four that produce output signals that are delayed from each other by multiples of 90°. However, alternate embodiments may arrange light detectors in groups of 6, 8, or some other number and produce output signals that are delayed from each other by multiples of 60°, 45°, or 360° divided by the number of light detectors in one group. Figure 10 shows an alternate embodiment where light detectors 101a-f are arranged in groups of six.

Another alternative embodiment of the invention uses a code strip 31, as shown in Figure 11A, instead of a code wheel 3 for tracking movement and position along a route. The code strip 31 has transmissive sections 103 and non-transmissive sections 105 identical to those on code wheel 3 except that they have a rectangular shape instead of a trapezoidal shape. Module 111 is identical to module 1 except that the light detectors are rectangular instead of trapezoidal. The number and size of transmissive sections 103 on the code strip 31 can be changed as discussed above. The optical encoder resolution is determined by the number of transmissive sections 103 per unit length.

In other alternate embodiments, it may be desirable to produce an index pulse to signify the completion of a shaft 5 revolution or some fraction of a shaft 5 revolution. In this case, another LED and emitter lens (not shown) producing a another beam of light may be utilized for providing index pulses. This light beam will be modulated by a another track 33 on the code wheel, as shown in Figure 12A, and will be detected by interdigitated light detectors 35, shown in Figure 12[illegible]. These

interdigitated light detectors 35 include the function of the phase plate used in prior-art optical encoders and produce push-pull output signals. The outputs of alternate light detectors will be connected together to form two separate light detector output signals I and $\bar{I}$ shown in Figure 12B which obtain their extreme amplitude at the same time. The number of times this extreme amplitude is reached during one revolution of the shaft is equal to the number of index pulses per revolution of the shaft. I and $\bar{I}$ are compared by the comparator 37 shown in Figure 12A to produce an index pulse, as shown in Figure 12B, when both output signals reach their extreme amplitudes. To obtain a sharp index pulse, the transmissive sections 13 of the index pulse optical track 33 are unevenly spaced as described in U.S. Patent Number 4,451,731 which is incorporated herein by reference. Also, transmissive sections are located throughout the entire length of the optical track to maintain $\bar{I}$'s amplitude as also described in U.S. Patent Number 4,451,731.

The embodiment of the invention using a code strip instead of a code wheel may also have index pulses to signify when an object has traversed some fraction of the route or has reached either end of the route.

Claims

1. An optical encoder for indicating the rotational movement of a shaft (5) or the linear movement of an object, comprising:

an emitter means (11) for emitting a light beam along a light path;

a light modulation means (3) comprising an optical track (17) positioned to cross the light path, the optical track having alternating transmissive (13) and non-transmissive sections (15) for modulating the light beam in response to the movement; and

a detector means, positioned in the light path, for receiving the light beam uninterrupted from the light modulation means and for generating more than one output signal ($A\bar{B}$, AB, $\bar{A}B$, $\bar{A}\bar{B}$) in response to the movement, wherein the output signals have substantially the same shape and are delayed from each other in phase by approximately integer multiples of 360° divided by the number of output signals; wherein

the light modulation means is concentrically attached to the shaft for rotational movement, or located next to the emitter means for linear movement of the object;

the detector means comprises individual light detectors (7) located immediately adjacent to one another and arranged into groups, and having an output for generating one of the output signals; and

each group of light detectors has substantially the same dimensions as one transmissive section plus one non-transmissive section.

2. An optical encoder according to claim 1, in which individual light detectors located at a distance of one transmissive section plus one non-transmissive section apart have their output signals connected together to form coupled outputs; and further comprising an electrical means for converting the coupled outputs into n/2 output channels, where n equals the number of light detectors in one group.

3. An optical encoder according to claim 1 or claim 2, in which each group of light detectors consists of four individual light detectors (7a-d).

4. An optical encoder according to any one of claims 1-3, in which the outputs of the individual light detectors have substantially identical shapes and are delayed from each other by approximately integer multiples of 90°.

5. An optical encoder according to any one of claims 1-4, in which:

the individual light detectors are located in an array having two ends; and

a dummy light detector (10, 12) is located at each end of the array.

6. An optical encoder according to any one of claims 1 - 5, in which each of the light detectors has a trapezoidal shape.

7. An optical encoder according to any one of claims 1 to 6, further comprising:

a second track (33) on the light modulation means with transmissive and non-transmissive sections aligned to modulate a light beam;

a second detector means, positioned in the light path for receiving the light beam modulated by the second track, and for generating index signals which reach their extreme amplitude at least once during each revolution of the shaft, or each linear movement of the object; and

an electrical means coupled to two output index signals (I, $\bar{I}$) for producing an index pulse in response to the extreme amplitudes of the output index signals; and in which

the second detector means comprises individual light detectors located immediately adjacent to one another, the individual light detectors having outputs;

the outputs of alternate light detectors are connected together to form the two output index signals; and

the size and shape of the light detectors and transmissive sections are operative for the two output signals reaching their extreme amplitude at least once during each revolution or linear movement.

8. An optical encoder according to any one of claims 1 to 6 in which

the detector means generates index signals which reach their extreme amplitude at least once during each revolution of the shaft, or each linear movement of the object;

the outputs of alternate light detectors are connected together to form two output index signals; and

the size and shape of the light detectors and transmissive sections are operative for the two output signals reaching their extreme amplitude at least once during each revolution or linear movement; and further including

an electrical means coupled to the output index signals for producing an index pulse in response to the extreme amplitudes of the output index signals.

Patentansprüche

1. Optischer Kodierer zum Anzeigen der Drehbewegung einer Welle (5) oder der linearen Bewegung eines Objekts, welcher umfaßt:
   - eine Emissionseinrichtung (11) zum Aussenden eines Lichtstrahls entlang eines Lichtwegs,
   - eine Lichtmodulationseinrichtung (3) mit einer optischen Bahn (17), welche so angeordnet ist, daß sie den Lichtweg kreuzt, und abwechselnd durchlässige (13) und nicht durchlässige Abschnitte (15) zum Modulieren des Lichtstrahls in Antwort auf die Bewegung besitzt, und
   - eine Detektoreinrichtung, welche in dem Lichtweg angeordnet ist, um den Lichtstrahl nicht unterbrochen von der Lichtmodulationseinrichtung zu empfangen und um mehr als ein Ausgangssignal ($A\overline{B}$, AB, $\overline{A}B$, $\overline{A}\overline{B}$) in Antwort auf die Bewegung zu erzeugen, wobei die Ausgangssignale im wesentlichen dieselbe Form haben und gegeneinander um ungefähr ganzzahlige Vielfache von 360°, geteilt durch die Zahl der Ausgangssignale, phasenverzögert sind,

   wobei die Lichtmodulationseinrichtung im Fall der Drehbewegung konzentrisch an der Welle befestigt oder in der Nähe der Emissionseinrichtung im Fall der linearen Bewegung des Objekts angeordnet ist,
   die Detektoreinrichtung individuelle Lichtdetektoren (7) umfaßt, welche sich in unmittelbarer Nachbarschaft zueinander befinden und in Gruppen angeordnet sind und einen Ausgang zum Erzeugen eines der Ausgangssignale besitzen, und jede Gruppe von Lichtdetektoren im wesentlichen dieselben Abmessungen hat wie ein durchlässiger Abschnitt plus einem nicht durchlässigen Abschnitt.

2. Optischer Kodierer nach Anspruch 1, bei welchem die Ausgangssignale von individuellen Lichtdetektoren, welche voneinander um einen Abstand von einem durchlässigen Abschnitt plus einem nicht durchlässigen Abschnitt entfernt angeordnet sind, verbunden sind, so daß gekoppelte Ausgänge gebildet werden, und welcher weiterhin eine elektrische Einrichtung zum Konvertieren der gekoppelten Ausgänge in n/2 Ausgangskanäle umfaßt, wobei n gleich der Zahl der Lichtdetektoren in einer Gruppe ist.

3. Optischer Kodierer nach Anspruch 1 oder Anspruch 2, bei welchem jede Gruppe von Lichtdetektoren aus vier individuellen Lichtdetektoren (7a-d) besteht.

4. Optischer Kodierer nach einen der Ansprüche 1 bis 3, bei welchem die Ausgänge der individuellen Lichtdetektoren im wesentlichen eine identische Form haben und gegeneinander um ungefähr ganzzahlige Vielfache von 90° verzögert sind.

5. Optischer Kodierer nach einem der Ansprüche 1 bis 4, bei welchem die individuellen Lichtdetektoren in einem Feld mit zwei Enden angeordnet sind und eine Lichtdetektorattrappe (10, 12) sich an jedem Ende des Felds befindet.

6. Optischer Kodierer nach einem der Ansprüche 1 bis 5, bei welchem jeder Lichtdetektor eine trapezartige Form besitzt.

7. Optischer Kodierer nach einem der Ansprüche 1 bis 6, welche weiterhin umfaßt:
   - eine zweite Bahn (33) auf der Lichtmodulationseinrichtung, auf welcher durchlässige und nicht durchlässige Abschnitte aufgereiht sind, um einen Lichtstrahl zu modulieren,
   - eine zweite Detektoreinrichtung, welche in dem Lichtweg angeordnet ist, zum Empfangen des durch die zweite Bahn modulierten Lichtstrahls und zum Erzeu-

gen von Indexsignalen, welche ihre extremale Amplitude mindestens einmal während jeder Umdrehung der Welle oder jeder linearen Bewegung des Objekts erreichen, und
- eine elektrische Einrichtung, welche an zwei Ausgangsindexsignale (I, $\bar{I}$) gekoppelt ist, zum Erzeugen eines Indexpulses in Antwort auf die extremalen Amplituden der Ausgangsindexsignale,

und bei welchem die zweite Detektoreinrichtung individuelle Lichtdetektoren umfaßt, welche in unmittelbarer Nachbarschaft zueinander angeordnet sind, wobei die individuellen Lichtdetektoren Ausgänge besitzen, die Ausgänge von übernächsten Lichtdetektoren miteinander verbunden sind, um zwei Ausgangsindexsignale zu bilden, und
die Größe und Form der Lichtdetektoren und der durchlässigen Abschnitte sich so auswirken, daß die zwei Ausgangssignale ihre extremale Amplitude mindestens einmal während jeder Umdrehung oder jeder linearen Bewegung erreichen.

8. Optischer Kodierer nach einem der Ansprüche 1 bis 6, bei welchem die Detektoreinrichtung Indexsignale erzeugt, welche ihre extremale Amplitude zumindest einmal während jeder Umdrehung der Welle oder während jeder linearen Bewegung des Objekts erreichen,
die Ausgänge von übernächsten Lichtdetektoren miteinander verbunden sind, so daß zwei Ausgangsindexsignale gebildet werden und
die Größe und Form der Lichtdetektoren und der durchlässigen Abschnitte sich so auswirken, daß die zwei Ausgangssignale ihre extremale Amplitude mindestens einmal während jeder Umdrehung oder jeder linearen Bewegung erreichen,
und welcher weiterhin eine elektrische Einrichtung, welche mit den Ausgangsindexsignalen gekoppelt ist, zum Erzeugen eines Indexpulses in Antwort auf die extremalen Amplituden der Ausgangssignale umfaßt.

Revendications

1. Un codeur optique pour indiquer le mouvement de rotation d'un arbre (5) ou le mouvement linéaire d'un objet, comprenant :
   - un moyen émetteur (11) pour émettre un faisceau de lumière le long d'un trajet de lumière ;
   - un moyen de modulation de lumière (3) comprenant une voie optique (17) positionnée de façon à croiser le trajet de lumière, la voie optique comportant en alternance des sections transmissives (13) et non-transmissives (15) pour moduler le faisceau de lumière en réponse au mouvement ; et
   - un moyen détecteur, positionné dans le trajet de lumière, pour recevoir le faisceau de lumière de façon ininterrompue en provenance du moyen de modulation de lumière et pour produire plus d'un signal de sortie ($A\bar{B}$, AB, $\bar{A}B$, $\bar{A}\bar{B}$) en réponse au mouvement, les signaux de sortie ayant sensiblement la même forme et étant retardés entre eux et en phase de multiples approximativement entiers de 360° divisés par le nombre de signaux de sortie ; dans lequel,
     - le moyen de modulation de lumière est fixé concentriquement sur l'arbre pour un mouvement de rotation de l'objet, ou bien est situé à proximité du moyen émetteur pour un mouvement linéaire de l'objet ;
     - le moyen détecteur comprend des détecteurs individuels de lumière (7) qui sont situés dans des positions mutuellement immédiatement adjacentes et répartis en groupes, en comportant une sortie pour produire un des signaux de sortie ; et
     - chaque groupe de détecteurs de lumière a sensiblement les mêmes dimensions qu'une section transmissive plus une section non-transmissive.

2. Un codeur optique selon la revendication 1, dans lequel des détecteurs individuels de lumière espacés mutuellement d'une distance correspondant à une section transmissive plus une section non-transmissive ont leurs signaux de sortie qui sont combinés ensemble pour former des signaux couplés ; et comprenant en outre un moyen électrique pour convertir les signaux couplés en n/2 canaux de sortie, n étant égal au nombre de détecteurs de lumière dans un groupe.

3. Un codeur optique selon la revendication 1 ou la revendication 2, dans lequel chaque groupe de détecteurs de lumière se compose de quatre détecteurs individuels de lumière (7a-d).

4. Un codeur optique selon une quelconque des revendications 1 à 3, dans lequel les signaux de sortie des détecteurs individuels ont des bornes sensiblement identiques et sont retardés entre eux approximativement de multiples entiers de 90°.

5. Un codeur optique selon une quelconque des revendications 1 à 4, dans lequel :
   - les détecteurs individuels de lumière sont situés dans un réseau comportant deux extrémités ; et
   - un détecteur de lumière fictif (10, 12) est situé à chaque extrémité du réseau.

6. Un codeur optique selon une quelconque des revendications 1 à 5, dans lequel chacun des détecteurs de lumière a une forme trapézoïdale.

7. Un codeur optique selon une quelconque des revendications 1 à 6, comprenant en outre :
   - une seconde voie (33) prévue sur le moyen de modulation de lumière, avec des sections transmissive et non-transmissive alignées pour moduler un faisceau de lumière ;
   - un second moyen détecteur, positionné dans la voie de lumière pour recevoir le faisceau de lumière modulé par la seconde voie, et pour produire des signaux d'indexage qui atteignent leur amplitude extrême au moins une fois pendant chaque révolution de l'arbre, ou pendant chaque mouvement linéaire de l'objet ; et
   - un moyen électrique recevant deux signaux d'indexage de sortie (I, $\bar{I}$) pour produire une impulsion d'indexage en réponse aux amplitudes extrêmes des signaux d'indexage de sortie ; et dans lequel :
   - le second moyen détecteur comprend des détecteurs individuels de lumière situés dans des positions mutuellement immédiatement adjacentes, les détecteurs individuels de lumière comportant des sorties ;
   - les sorties de détecteurs de lumière alternés sont reliés ensemble pour former les deux signaux d'indexage de sortie ; et
   - le dimensionnement et la forme des détecteurs de lumière et des sections transmissives interviennent pour que les deux signaux de sortie atteignent leur amplitude extrême au moins une fois pendant chaque révolution ou chaque mouvement linéaire.

8. Un codeur optique selon une quelconque des revendications 1 à 6, dans lequel :
   - le moyen détecteur produit des signaux d'indexage qui atteignent leur amplitude extrême au moins une fois pendant chaque révolution de l'arbre, ou chaque mouvement linéaire de l'objet ;
   - les sorties de détecteurs de lumière alternés sont reliés ensemble pour former deux signaux d'indexage de sortie ; et
   - le dimensionnement et la forme des détecteurs de lumière et des sections transmissives interviennent pour que les deux signaux de sortie atteignent leur amplitude extrême au moins une fois pendant chaque révolution ou chaque mouvement linéaire ;
   - le codeur comprenant en outre un moyen électrique relié aux signaux d'indexage de sortie pour produire une impulsion d'indexage en réponse aux amplitudes extrêmes des signaux d'indexage de sortie.

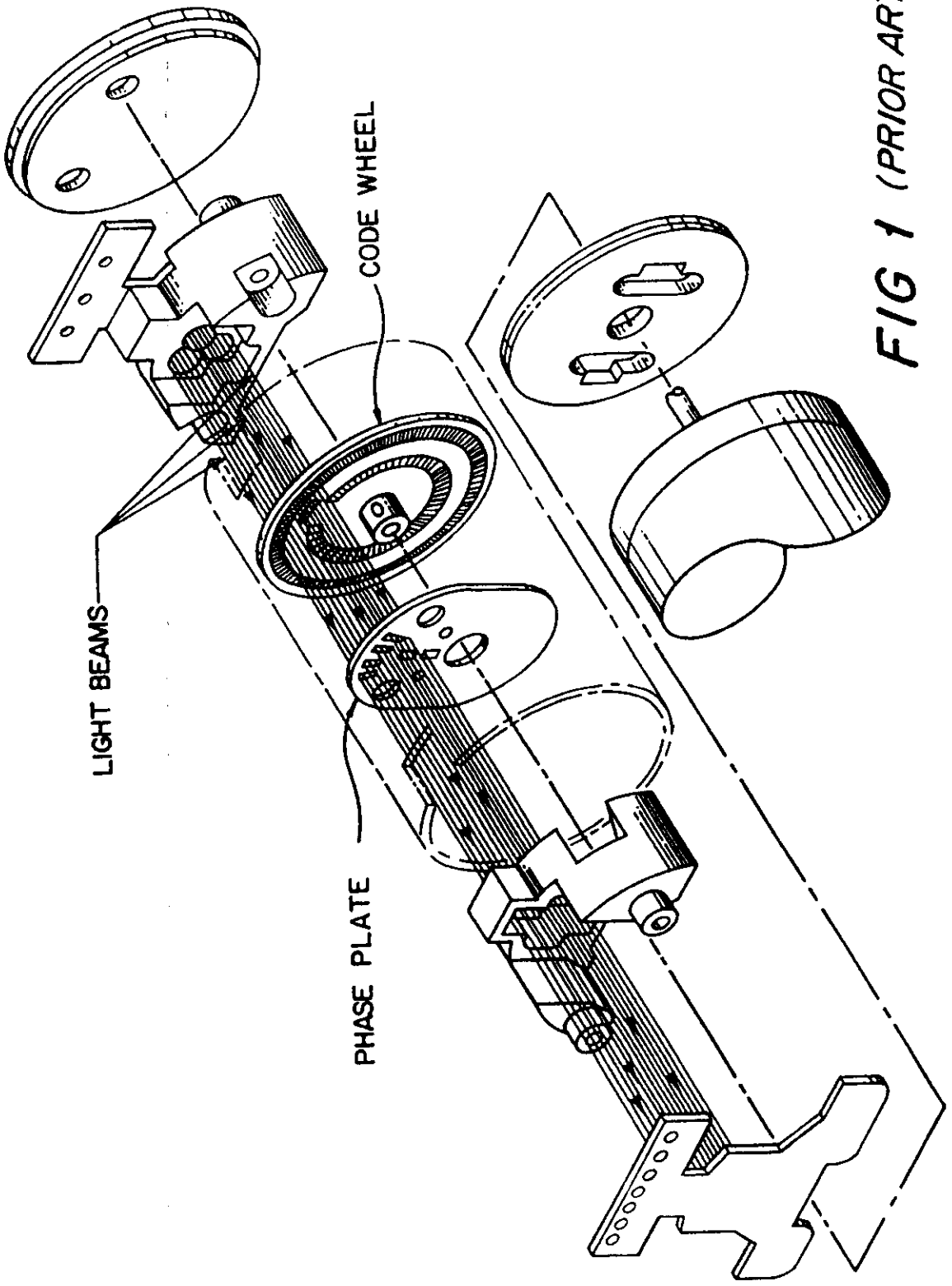

FIG 1 (PRIOR ART)

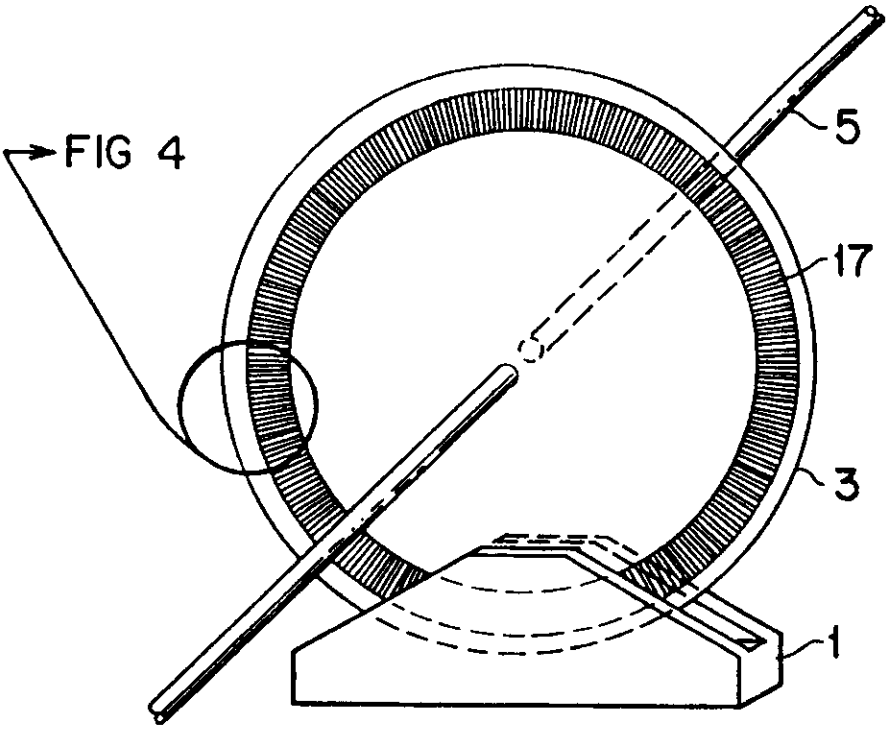

FIG 2A

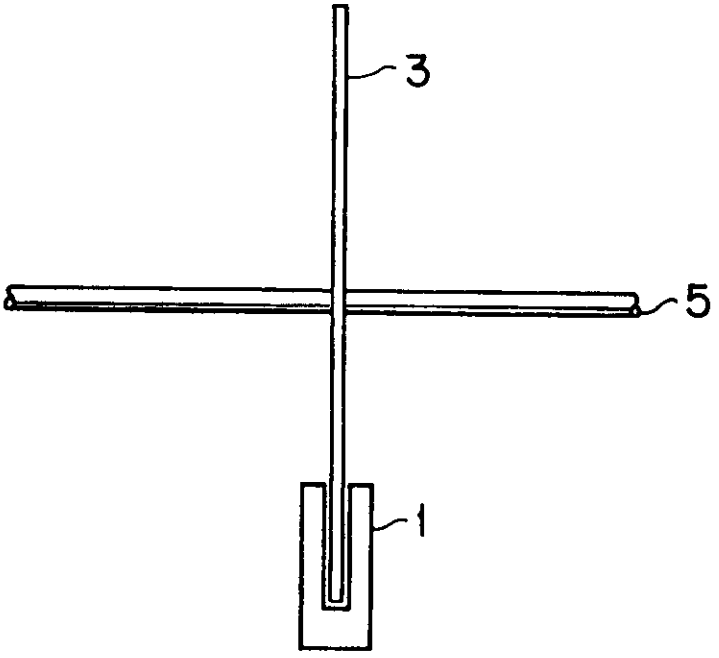

FIG 2B

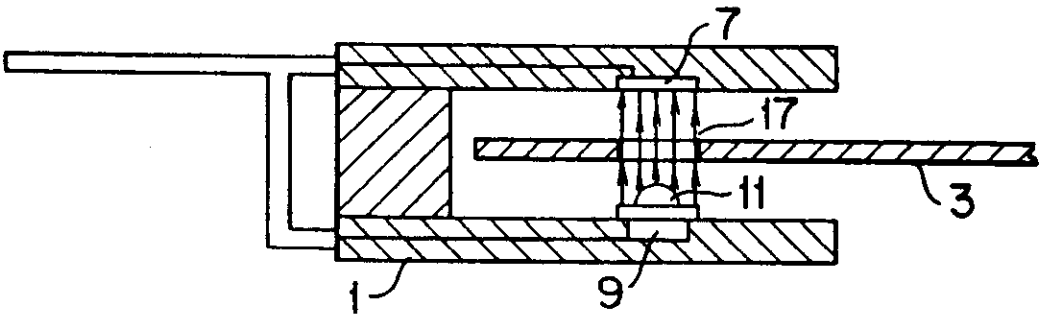

FIG 3

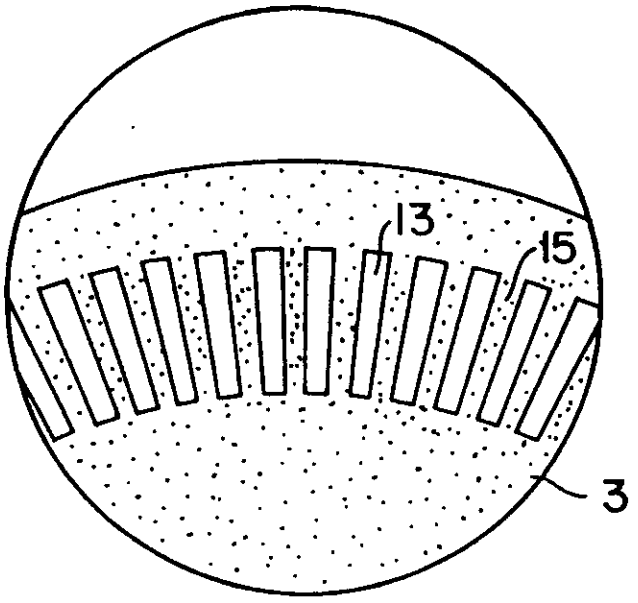

FIG 4

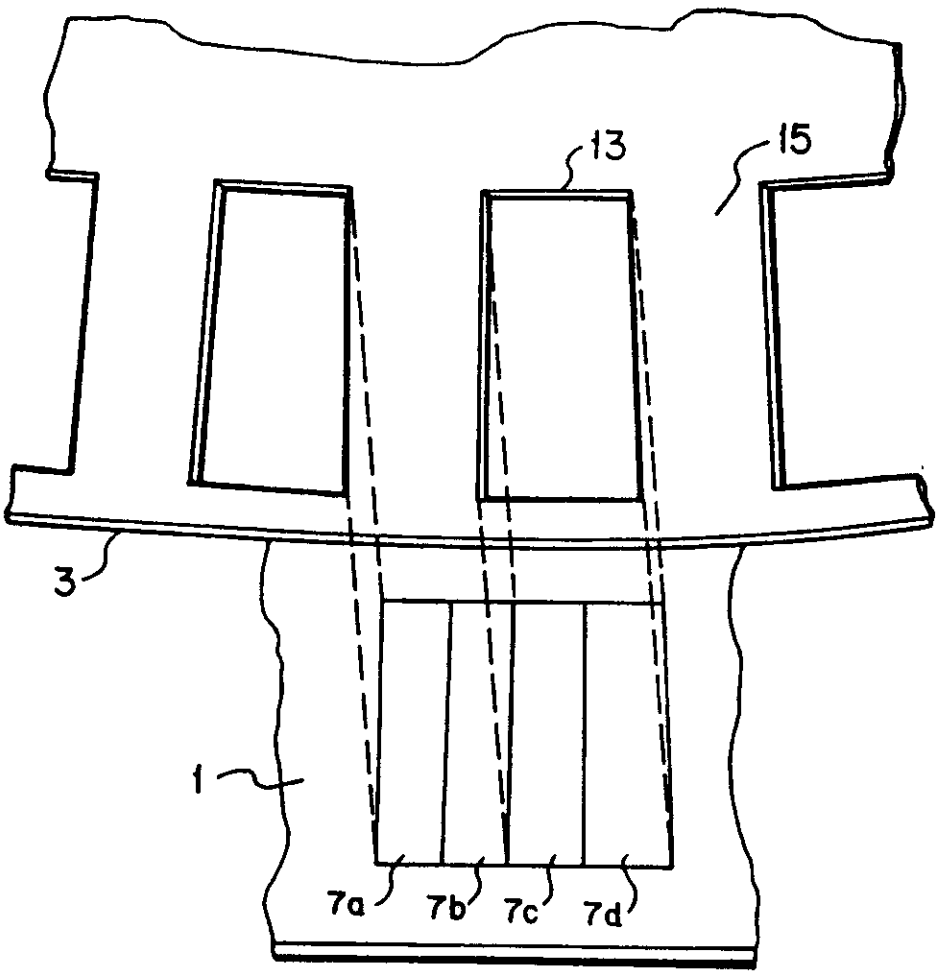

FIG 5A

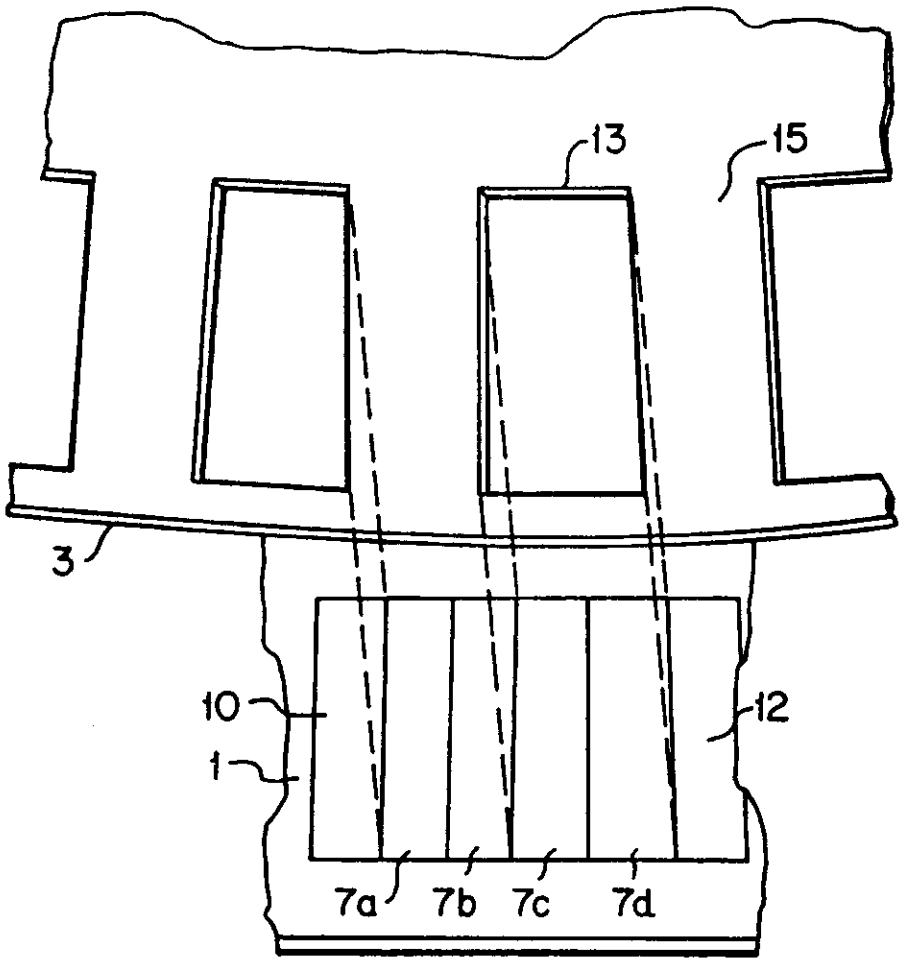

FIG 5B

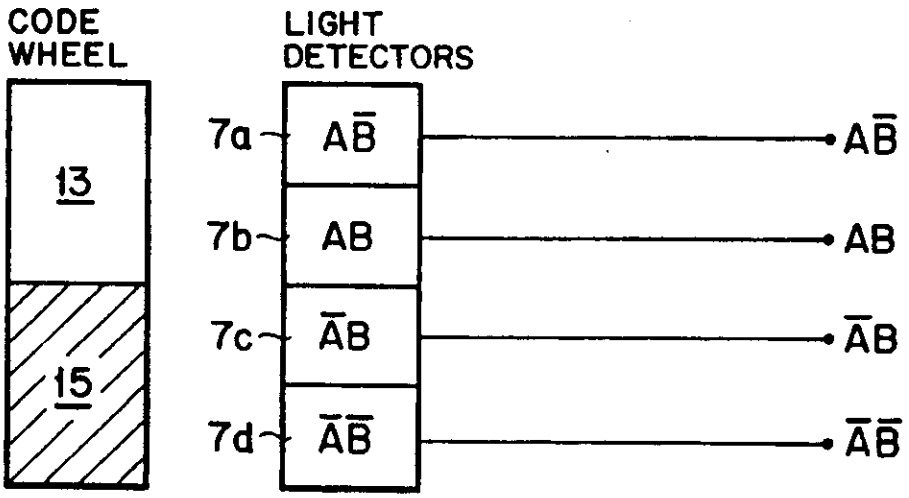
CODE WHEEL
LIGHT DETECTORS
13
15
7a
7b
7c
7d
AB̄
AB
ĀB
ĀB̄
AB̄
AB
ĀB
ĀB̄

FIG 6A

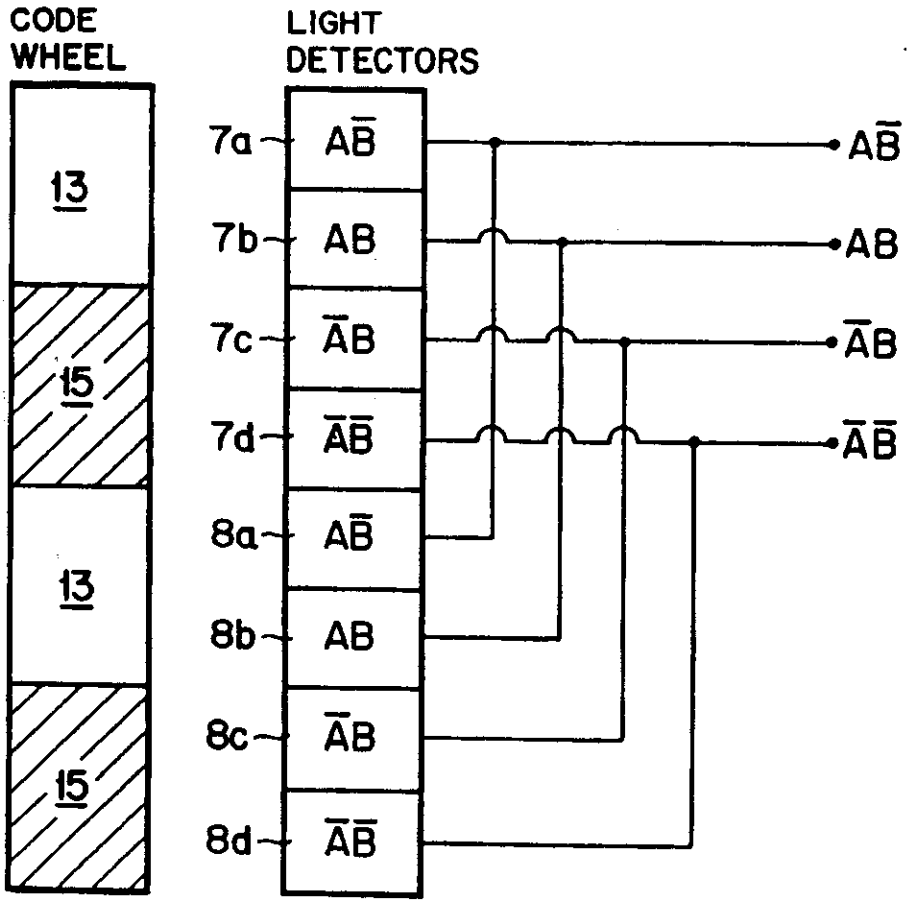
CODE WHEEL
LIGHT DETECTORS
13
15
13
15
7a
7b
7c
7d
8a
8b
8c
8d
AB̄
AB
ĀB
ĀB̄
AB̄
AB
ĀB
ĀB̄

FIG 6B

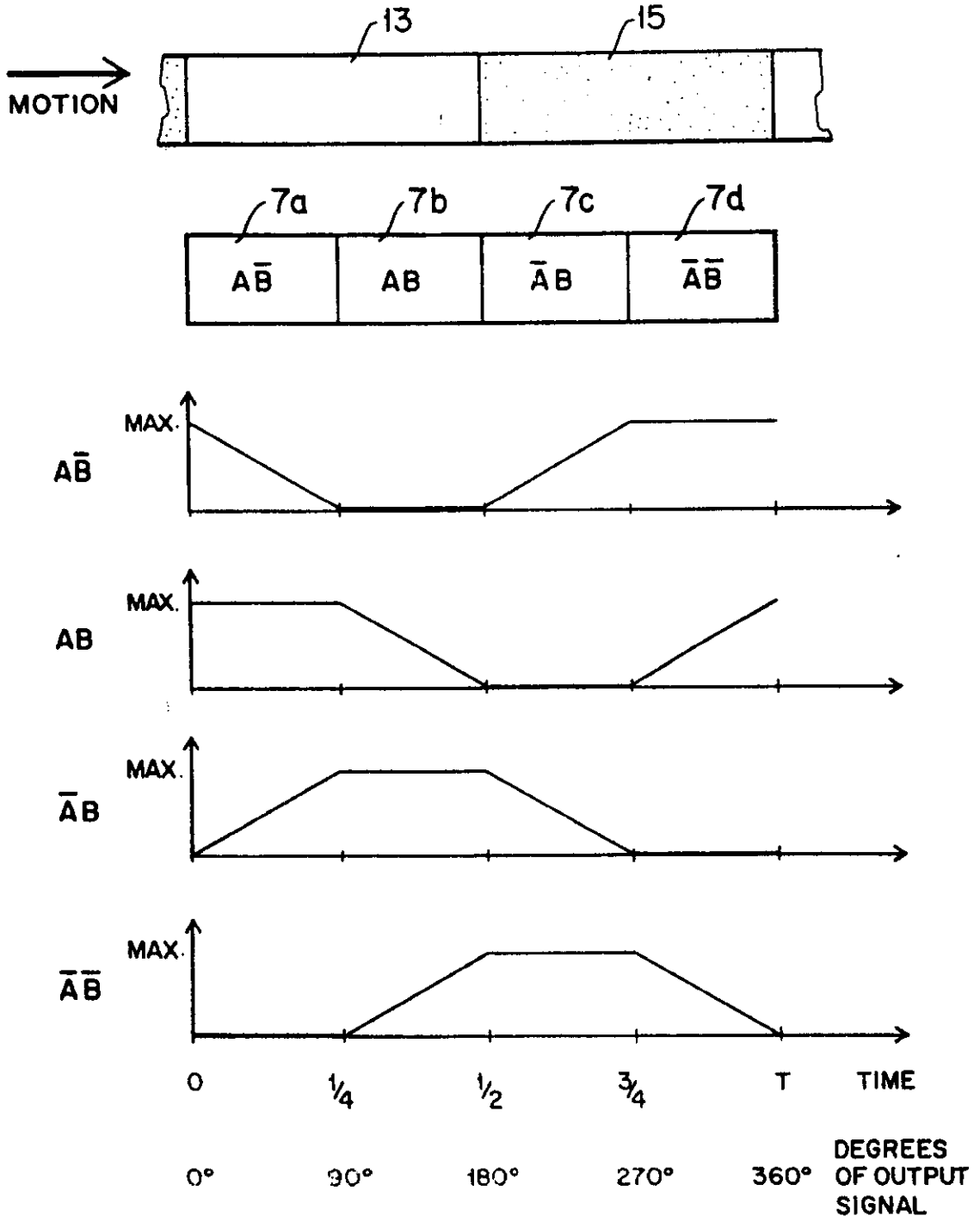
MOTION
13
15
7a
7b
7c
7d
AB̄
AB
ĀB
ĀB̄
MAX.
MAX.
MAX.
MAX.
AB̄
AB
ĀB
ĀB̄
0
1/4
1/2
3/4
T
TIME
0°
90°
180°
270°
360°
DEGREES OF OUTPUT SIGNAL

FIG 7A

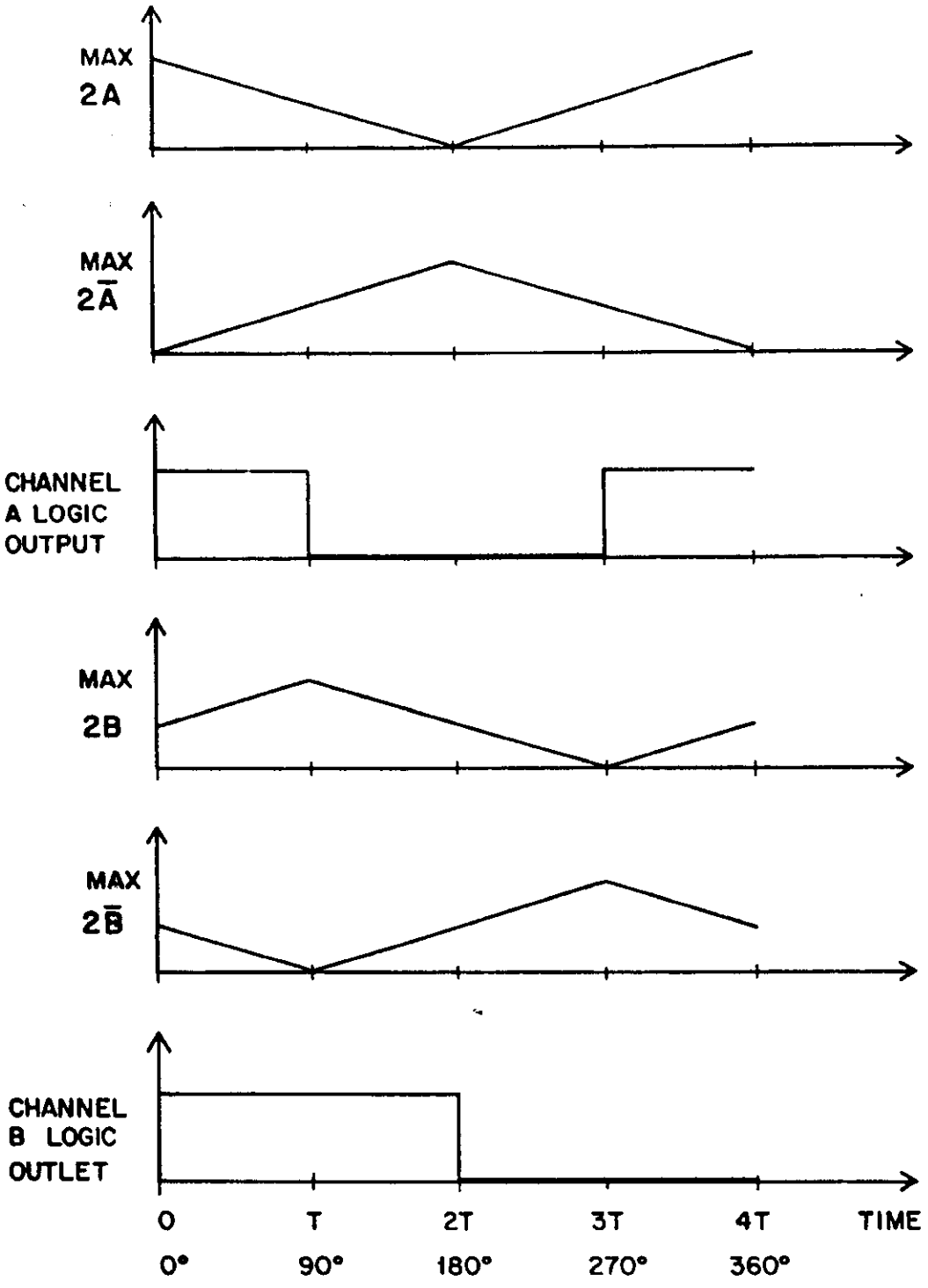
MAX
2A
MAX
2Ā
CHANNEL
A LOGIC
OUTPUT
MAX
2B
MAX
2B̄
CHANNEL
B LOGIC
OUTLET
0
T
2T
3T
4T
TIME
0°
90°
180°
270°
360°

FIG 7B

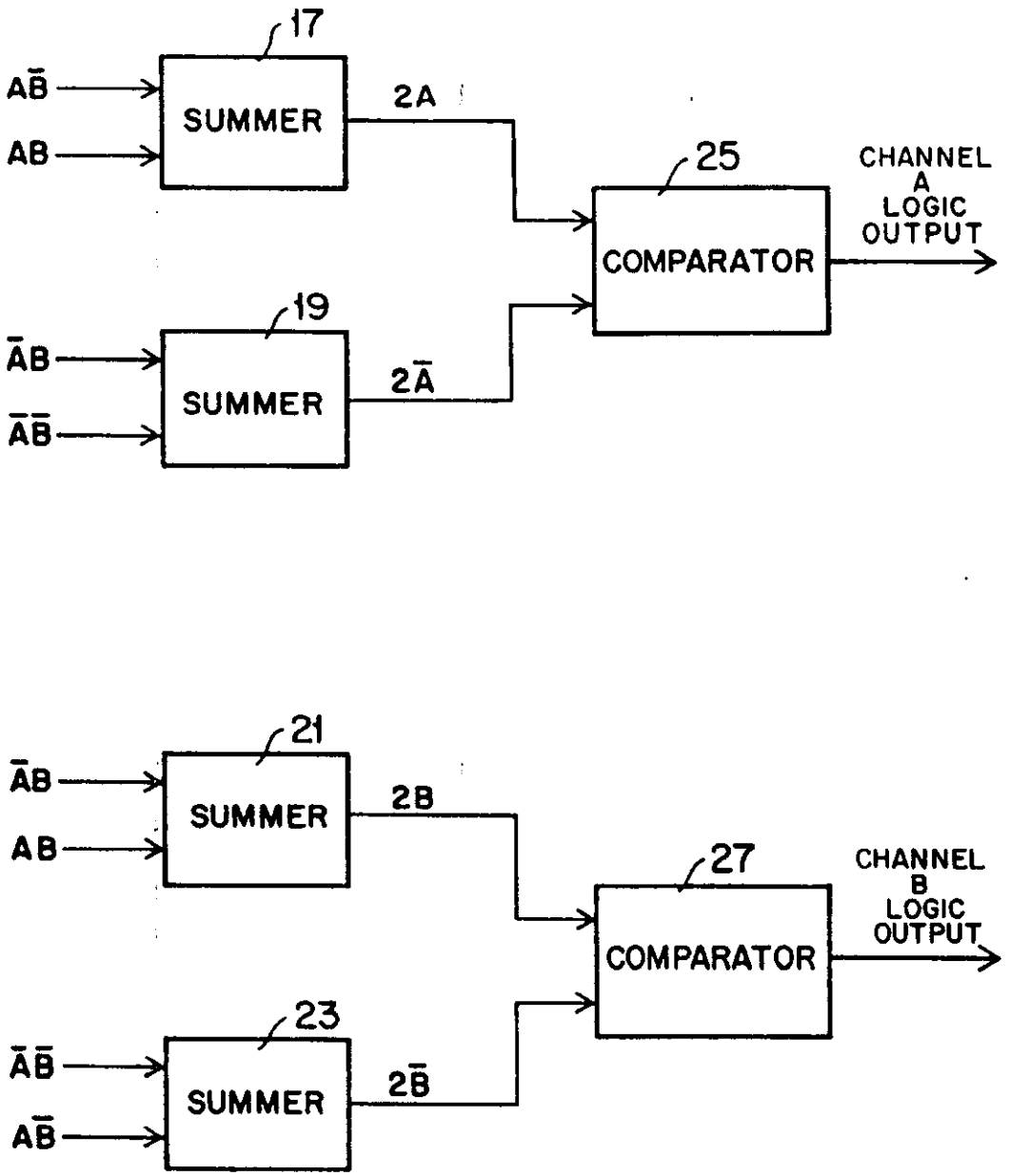
17
$A\bar{B}$
AB
SUMMER
2A
25
CHANNEL A LOGIC OUTPUT
COMPARATOR
19
$\bar{A}B$
$\bar{A}\bar{B}$
SUMMER
$2\bar{A}$
21
$\bar{A}B$
AB
SUMMER
2B
27
CHANNEL B LOGIC OUTPUT
COMPARATOR
23
$\bar{A}\bar{B}$
$A\bar{B}$
SUMMER
$2\bar{B}$

FIG 8

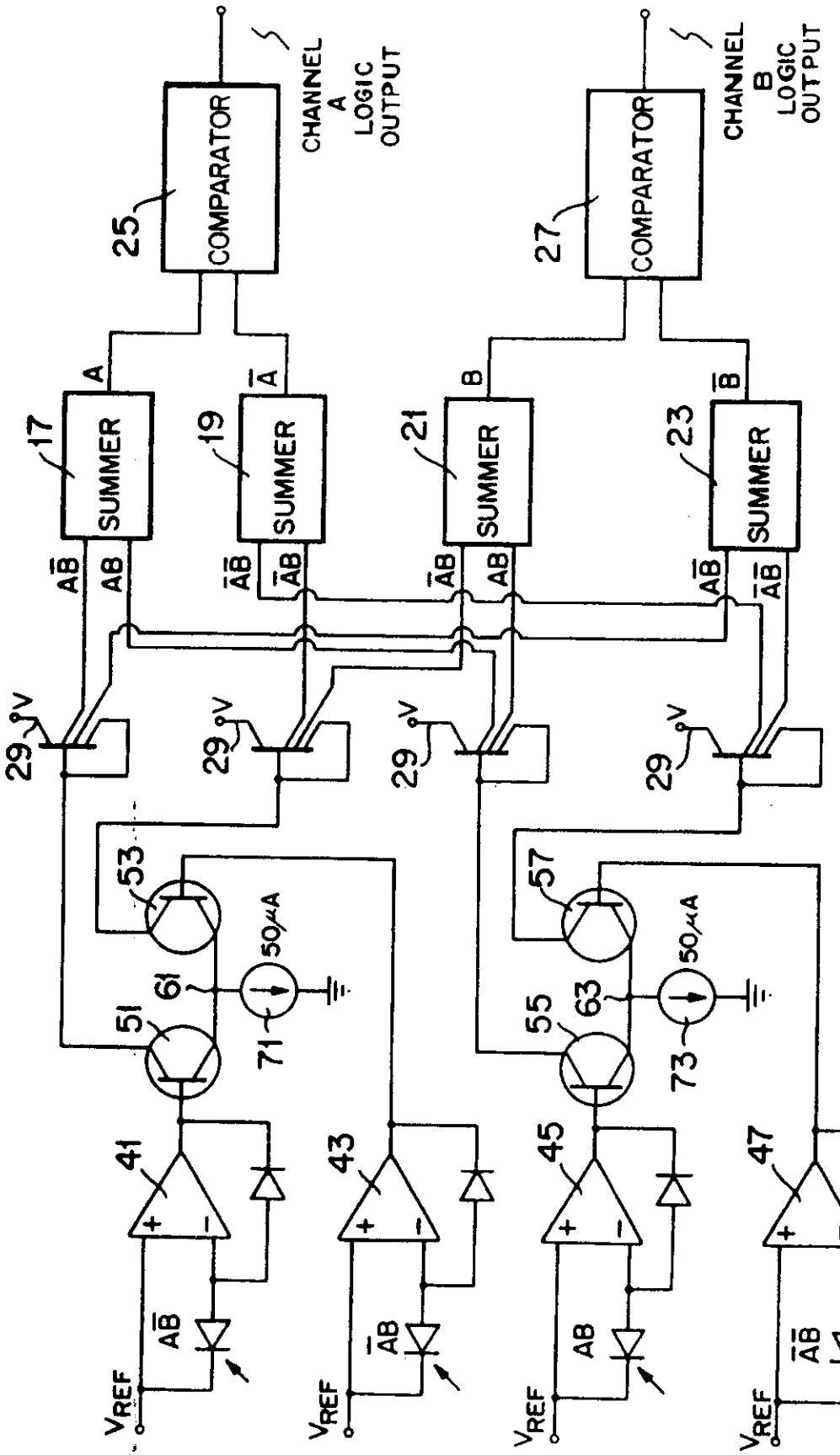
COMPARATOR
25
27
CHANNEL A LOGIC OUTPUT
CHANNEL B LOGIC OUTPUT
SUMMER
17
19
21
23
A
$\bar{A}$
B
$\bar{B}$
$A\bar{B}$
$\bar{A}B$
AB
$\bar{A}\bar{B}$
29
V
53
57
51
55
61
63
71
73
50μA
41
43
45
47
V_{REF}

FIG 9

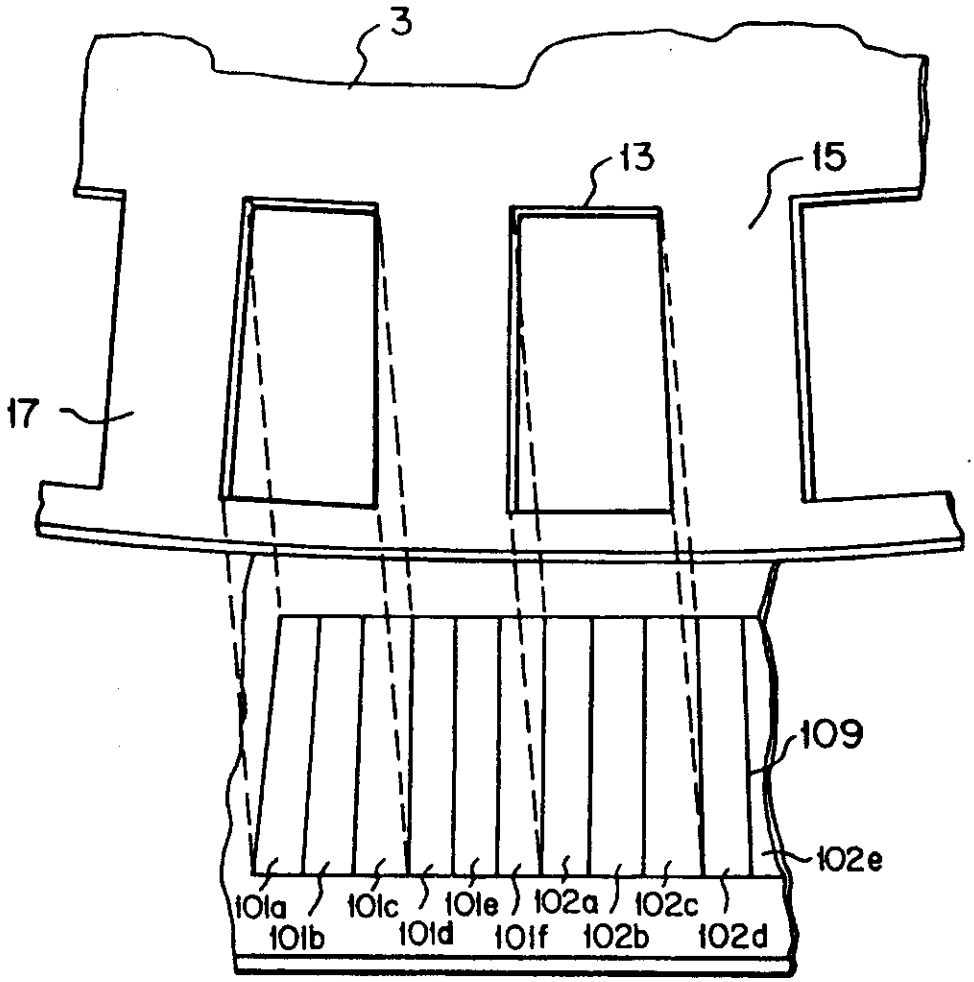
3
13
15
17
109
102e
101a
101b
101c
101d
101e
101f
102a
102b
102c
102d

FIG 10

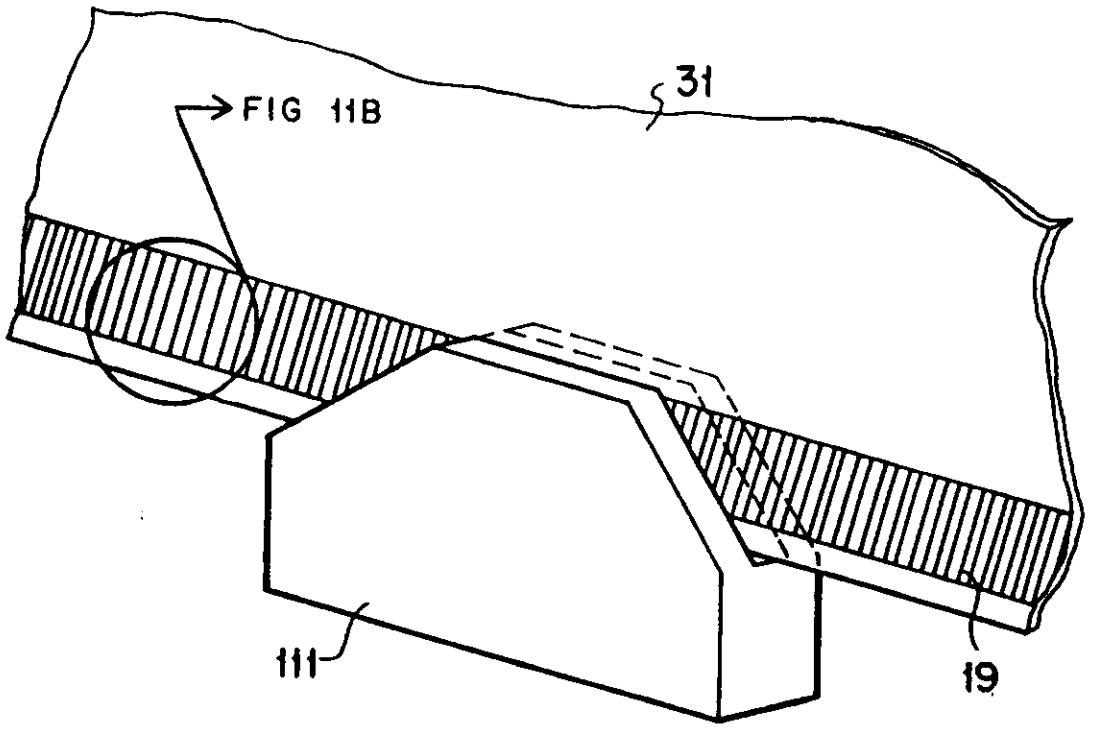

FIG 11A

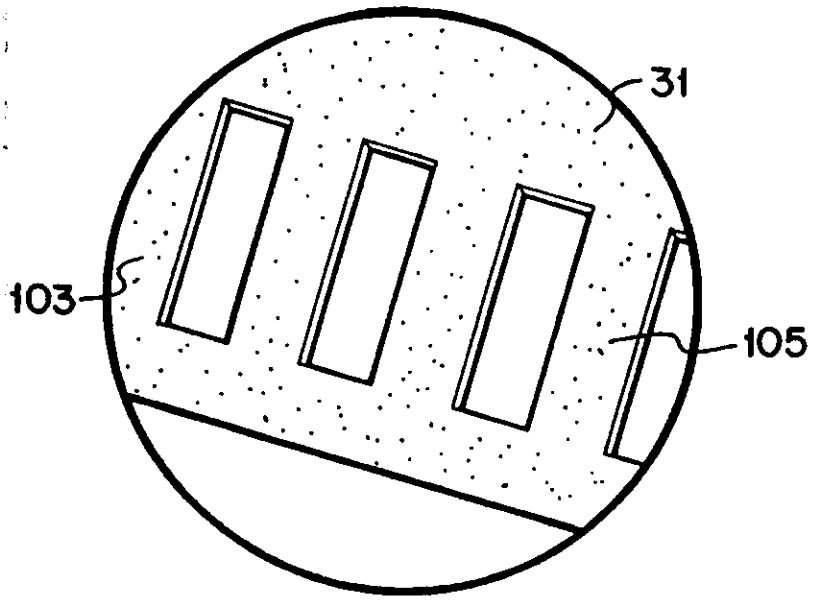

FIG 11B

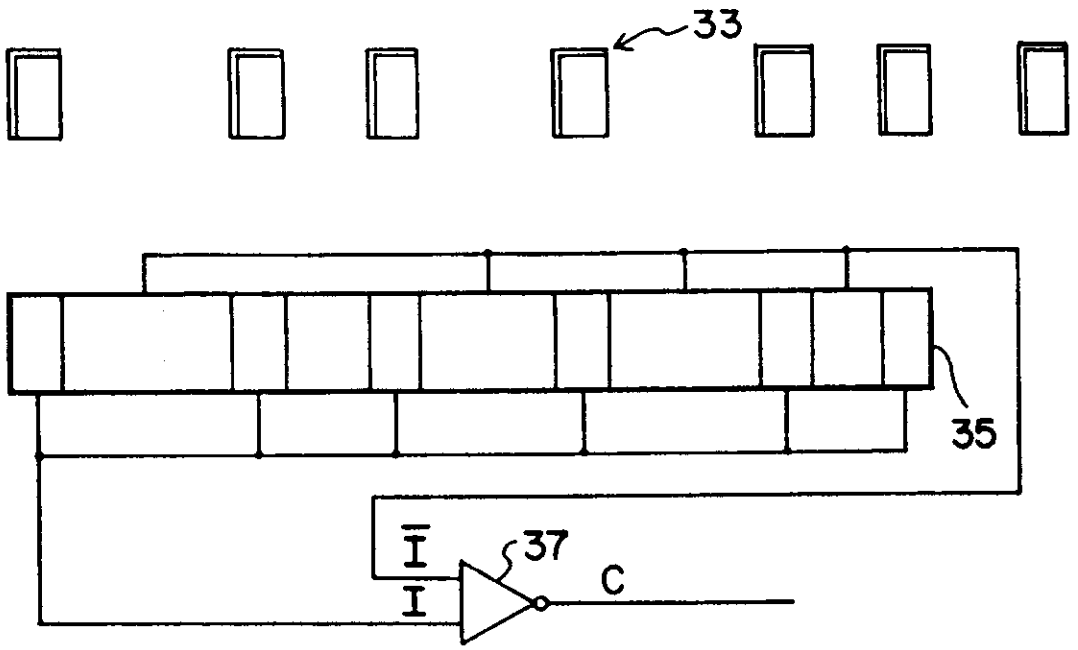

FIG 12A

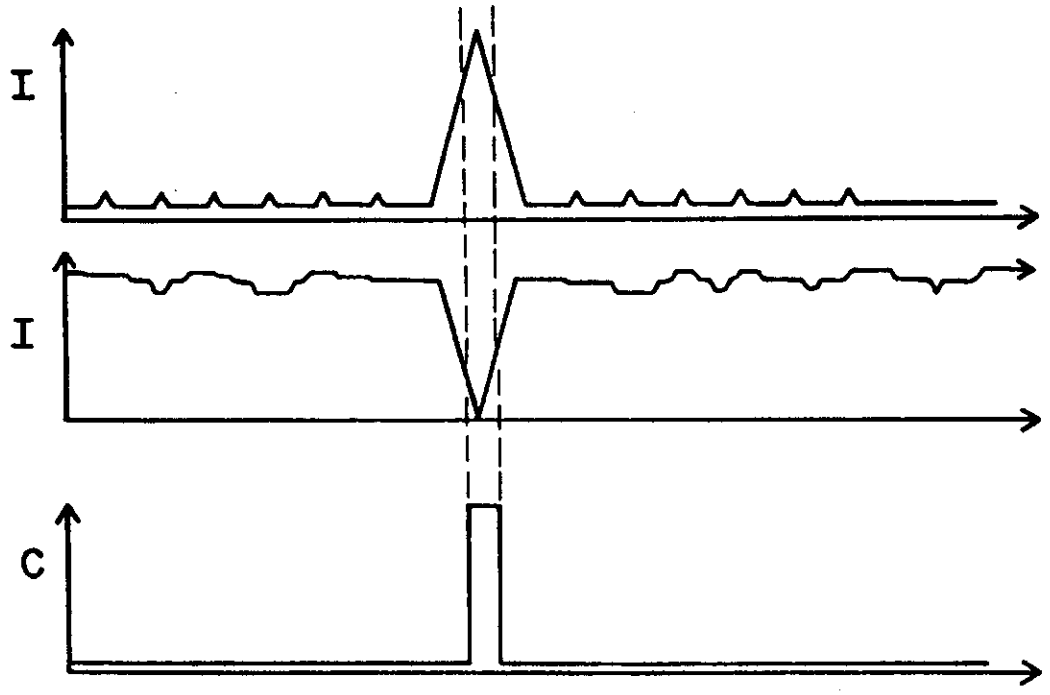

FIG 12B

REGISTER ENTRY FOR EP0206656

European Application No EP86304499.6 filing date 12.06.1986

Priority claimed:
19.06.1985 in United States of America - doc: 747084

Designated States DE FR GB IT SE

Title OPTICAL ENCODER

Applicant/Proprietor
HEWLETT-PACKARD COMPANY, P.O. Box 10301 3000 Hanover Street, Palo Alto California 94303-0890, United States of America [ADP No. 50014570003]

Inventor
MARK G. LEONARD, 663 Berry Avenue, Los Altos California 94022, United States of America [ADP No. 54521695001]

Classified to
G1A
H03M

Address for Service
CARPMAELS & RANSFORD, 43 Bloomsbury Square, LONDON, WC1A 2RA, United Kingdom [ADP No. 00000083001]

EPO Representative
STEPHEN JAMES COLGAN, CARPMAELS & RANSFORD 43 Bloomsbury Square, London WC1A 2RA., United Kingdom [ADP No. 50906551001]

Publication No EP0206656 dated 30.12.1986
Publication in English

Examination requested 12.06.1986

Patent Granted with effect from 29.12.1993 (Section 25(1)) with title OPTICAL ENCODER.

29.11.1988 EPO: Search report published on 30.11.1988
Entry Type 25.11 Staff ID. Auth ID. EPT

26.11.1993 Notification from EPO of change of EPO Representative details from
STEPHEN JAMES COLGAN, CARPMAELS & RANSFORD 43 Bloomsbury Square, London WC1A 2RA., United Kingdom [ADP No. 50906551001]
to
STEPHEN JAMES COLGAN, CARPMAELS & RANSFORD 43 Bloomsbury Square, London WC1A 2RA, United Kingdom [ADP No. 50906551001]
Entry Type 25.14 Staff ID. RD06 Auth ID. EPT

**** END OF REGISTER ENTRY ****

RENEWAL DETAILS

PUBLICATION NUMBER	EP0206656

PROPRIETOR(S)

Hewlett-Packard Company, P.O. Box 10301 3000 Hanover Street, Palo Alto California 94303-0890, United States of America

DATE FILED	12.06.1986
DATE GRANTED	29.12.1993
DATE NEXT RENEWAL DUE	12.06.1995
DATE NOT IN FORCE	
DATE OF LAST RENEWAL	31.05.1994
YEAR OF LAST RENEWAL	09
STATUS	PATENT IN FORCE