Nov. 22, 1949 L. K. LILJEGREN 2,488,547

LAND MINE

Filed Feb. 22, 1944 5 Sheets-Sheet 1

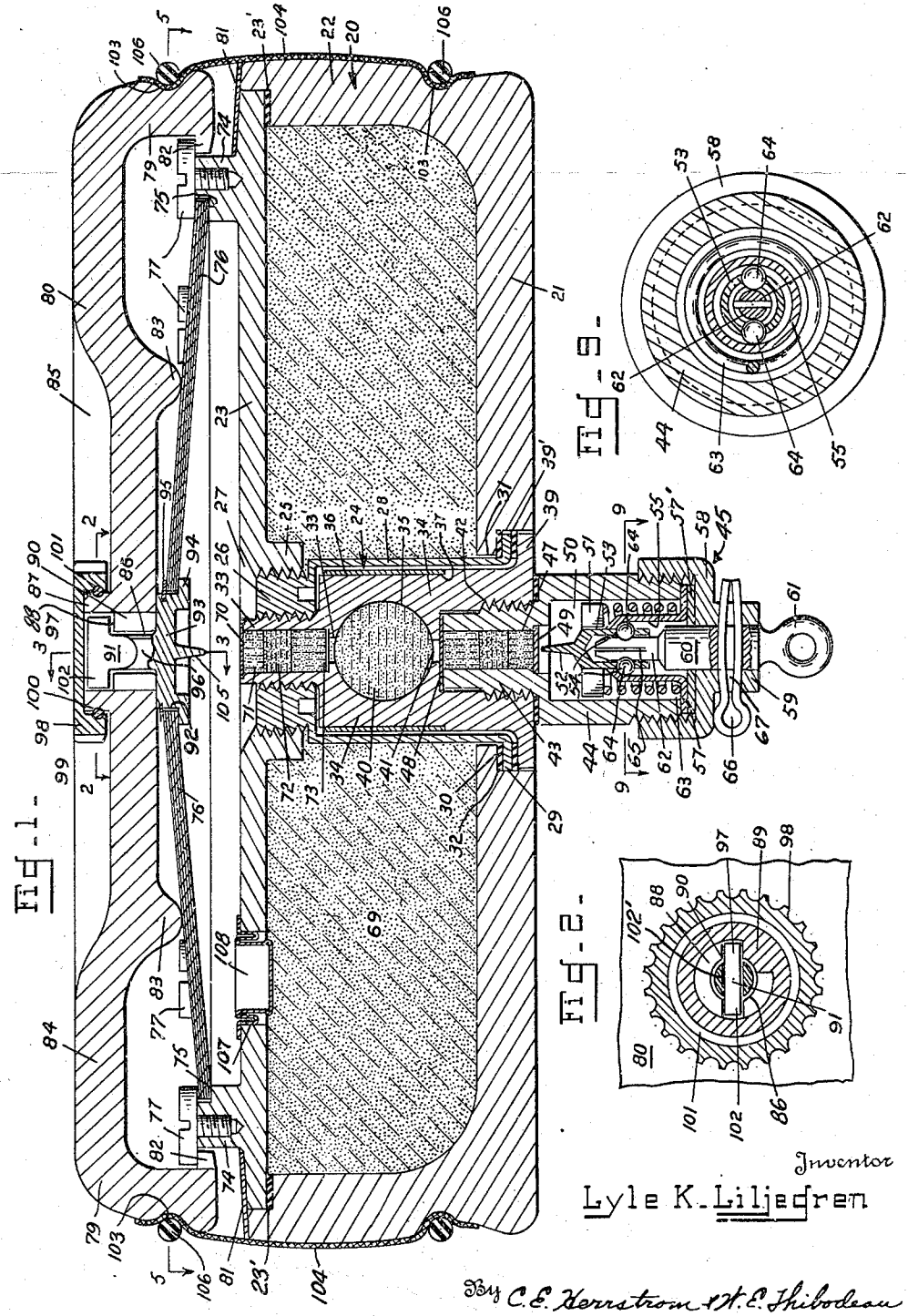

Fig. 1.

Fig. 3.

Fig. 2.

Inventor
Lyle K. Liljegren

By C. E. Herrstrom & H. E. Thibodeau
Attorneys

Nov. 22, 1949 L. K. LILJEGREN 2,488,547

LAND MINE

Filed Feb. 22, 1944 5 Sheets-Sheet 2

Fig. 3.

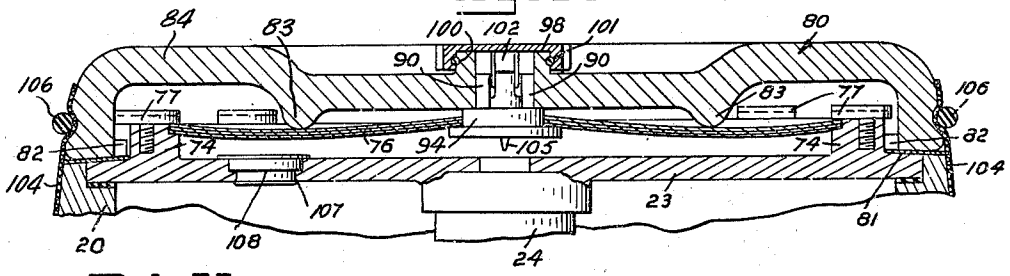

Fig. 20.

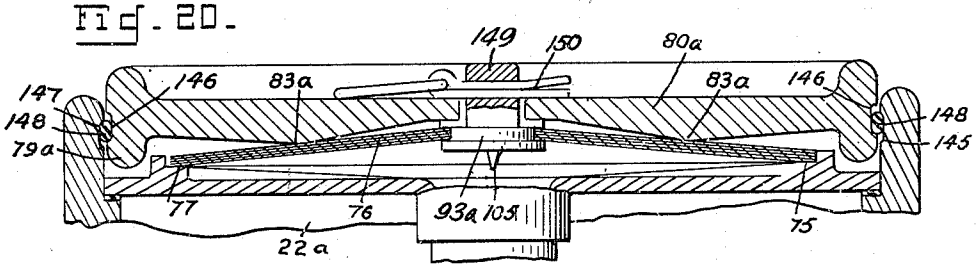

Fig. 21

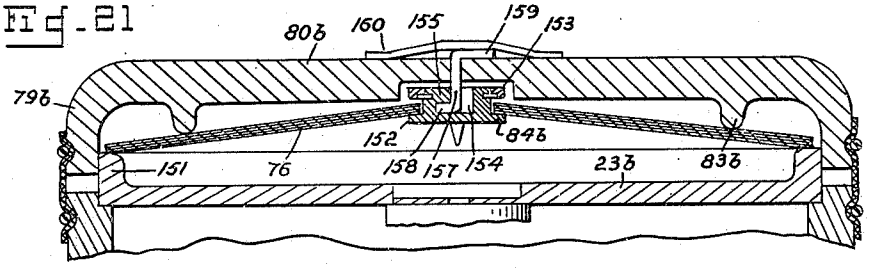

Fig. 22.

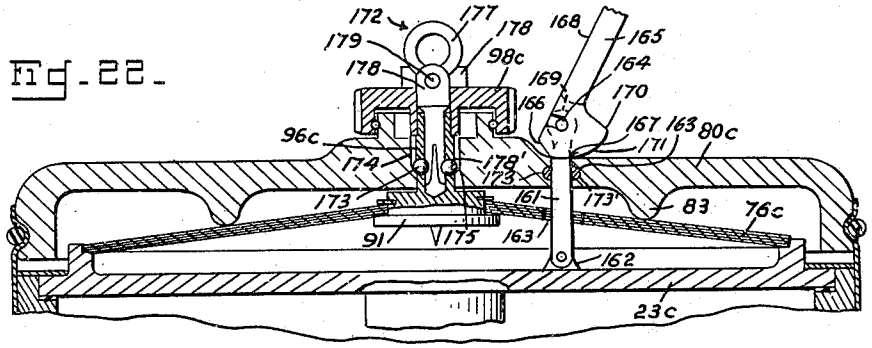

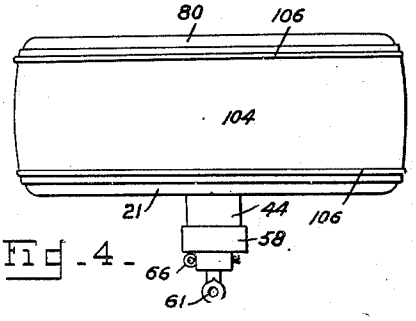

Fig. 4.

Inventor

Lyle K. Liljedren

By C. E. Kerrstrom & H. E. Thibodeau

Attorneys

Nov. 22, 1949 L. K. LILJEGREN 2,488,547

LAND MINE

Filed Feb. 22, 1944 5 Sheets-Sheet 3

Fig. 5.

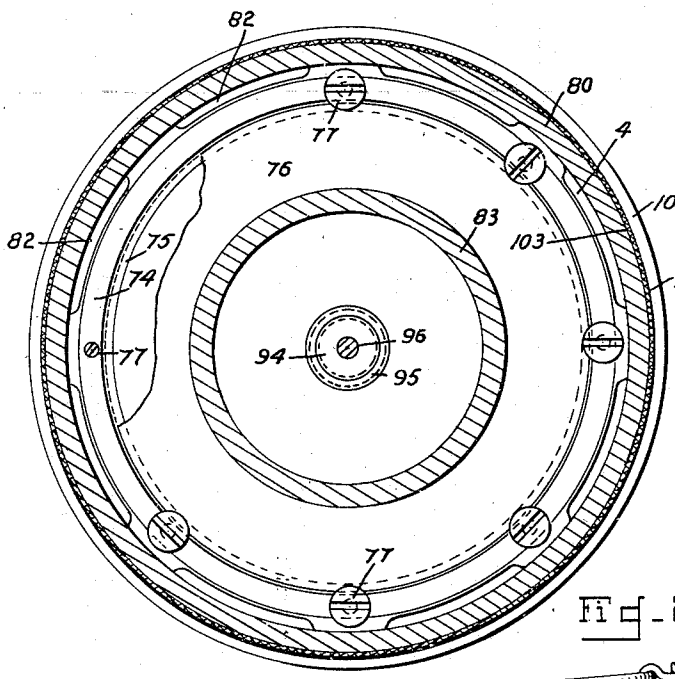

Fig. 7.

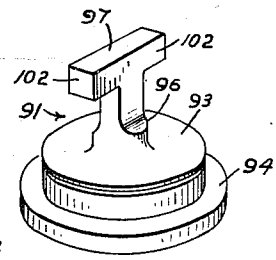

Fig. 8.

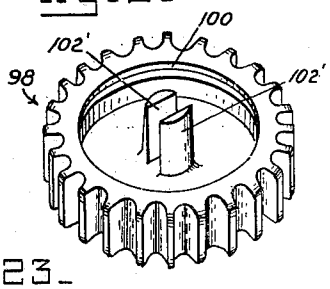

Fig. 23.

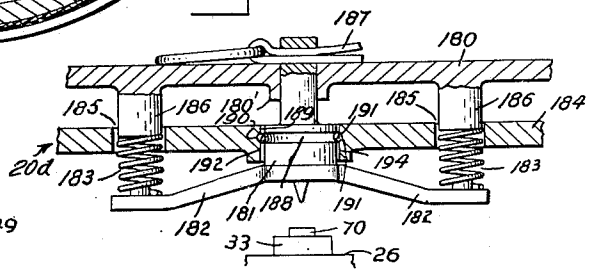

Fig. 6.

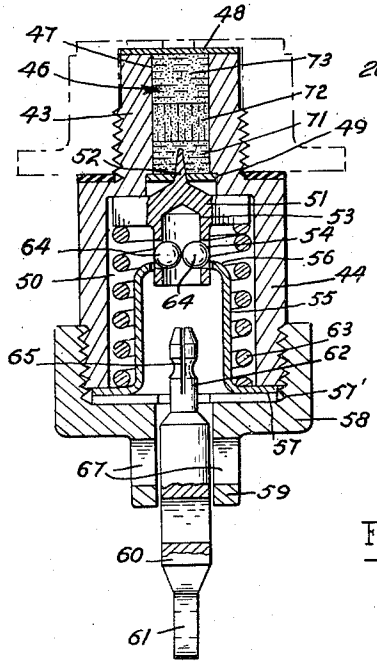

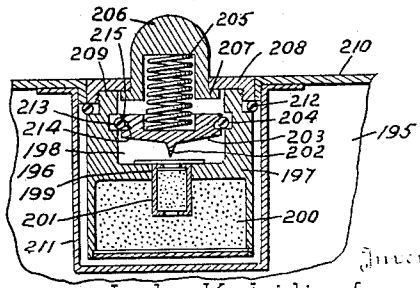

Fig. 24.

Inventor
Lyle K. Liljegren

By C. E. Herrstrom & H. E. Thibodeau
Attorneys

Nov. 22, 1949 L. K. LILJEGREN 2,488,547

LAND MINE

Filed Feb. 22, 1944 5 Sheets-Sheet 4

Fig. 10.

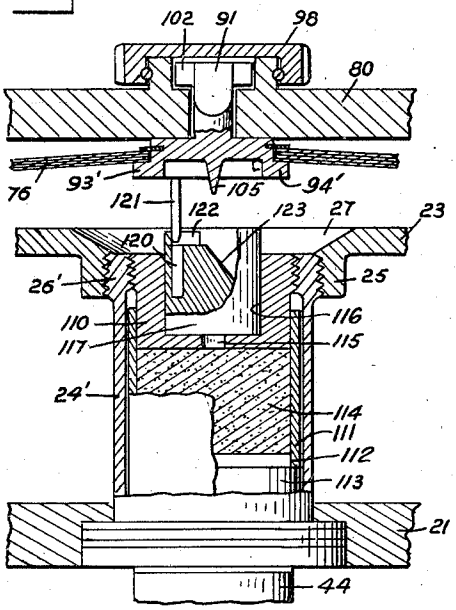

Fig. 15.

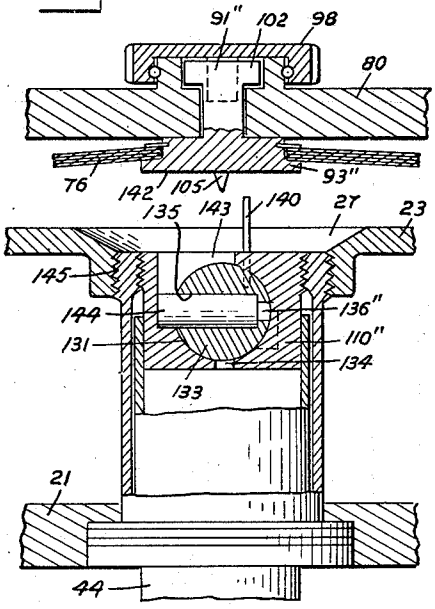

Fig. 13.

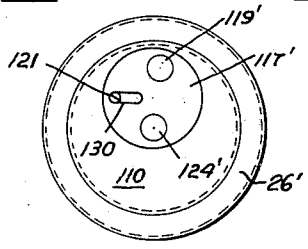

Fig. 14.

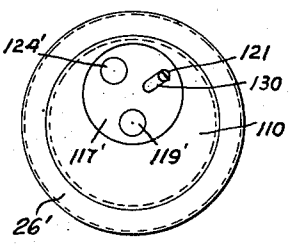

Fig. 17.

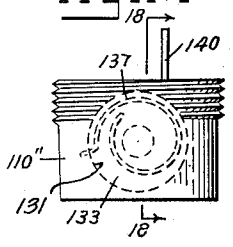

Fig. 18.

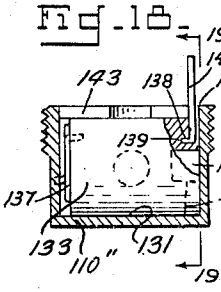

Fig. 19.

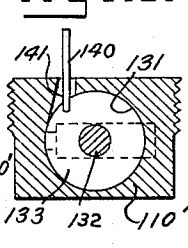

Fig. 16.

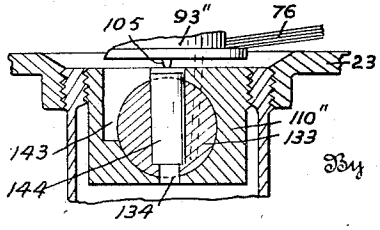

Inventor

Lyle K. Liljegren

By C. E. Herrstrom & H. P. Thibodeau

Attorneys

Nov. 22, 1949 L. K. LILJEGREN 2,488,547

LAND MINE

Filed Feb. 22, 1944 5 Sheets-Sheet 5

Fig. 11.

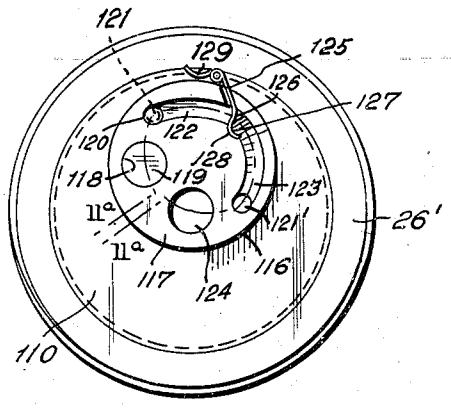

Fig. 12.

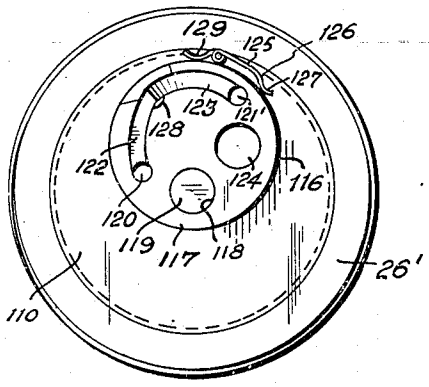

Fig. 11a.

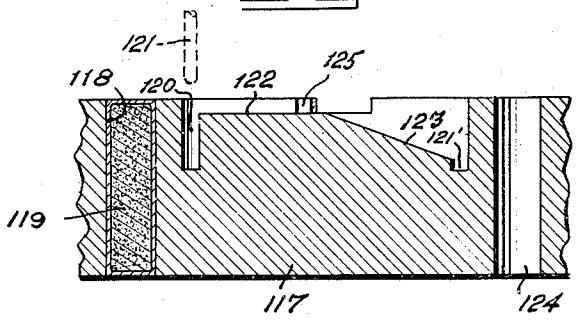

Inventor

Lyle K. Liljegren

By G. J. Kessenich + J. H. Church

Attorneys

Patented Nov. 22, 1949 2,488,547

UNITED STATES PATENT OFFICE

2,488,547

LAND MINE

Lyle K. Liljegren, Alexandria, Va., assignor to the United States of America as represented by the Secretary of War

Application February 22, 1944, Serial No. 523,429

19 Claims. (Cl. 102—8)

(Granted under the act of March 3, 1883, as amended April 30, 1928; 370 O. G. 757)

1

The invention described herein may be manufactured and used by or for the Government for governmental purposes without the payment to me of any royalty thereon.

The invention relates to mines and particularly land mines, or the like intended to be detonated by enemy personnel or matériel movement and other activity.

It has for an important aim to present a mine which may be used for delaying or impairing enemy activities by use as an anti-tank mine or as a "trap" mine; that is to say, one which may be made operative in response to compression such as might occur if the device were set in a roadway and run upon by a vehicle; and which may also or alternatively be connected to cords or tension wires so as to be operated by a pull on such cord or wire, and whereby the device may be connected to timing or timed operating means.

It is an important object of the invention to enable such a mine to be easily made safe up to the instant it is required to be armed for destructive response to enemy activity affecting the mine or its control devices.

A paramount purpose in this invention is to enable production of a mine having the desired qualities and advantages indicated as well as others hereinafter mentioned or apparent, which may be made practically entire, by the use of non-metallic materials.

In the direction last named a strongly inspiring need is the provision of an effective and powerful spring device of a novel kind adequate for detonating a percussion primer and at the same time capable of sustaining high pressures within non-operating limits required in such devices.

A further consideration impelling the conception of this invention is the production of a mine responsive to pressure of heavy vehicles such as "tanks" which may be set for safety while in position for offensive action and will withstand pressures of such vehicles without detonating and without suffering impairment of functions or deformations or displacement of operating or structural parts.

It is another important motive to present such a mine which may be easily and simply manipulated to place it in either armed or safe condition with great certainty and with a minimum liability of accident.

A specific desire is to offer a novel form of encasement for such a mine.

It is also a desire to offer a novel operating head and sealed assembly for such a mine.

An attainment sought is the construction of a mine having the essentials above indicated which will involve a minimum number of parts adapted to quantity production with a minimum of factory operations and enabling certainty of proper functional relation of parts with a minimum

2

liability of fault through variation from standard.

Another object in view is to enable assembly of principal members without requiring great exactitude in deterimning measurement and relative placing of parts by the assembler.

It is contemplated to enable the setting of the safety means in either safe or armed position while the mine is in situ offensively and without disturbing its emplacement materially.

It will thus be practicable to avoid last minute placing of mines in the event of a planned movement of a military organization and matériel, but to carry out a thorough and systematic planting of fuzed mines before the planned movement is begun, and arm the mines after movement of matériel, by a simple manual key-turning operation, which will involve a minimum of haste and of liability of mistake.

It is also in mind to provide a mine having the foregoing advantages and also well adapted to use under water, so that fording places in streams, beaches, and inshore sea bottoms adjacent to beaches may be mined for offense against vehicles and engineering operations, landing boats, etc.

A still further object is to present a mine for the uses indicated which may be easily and effectively made water proof without detracting from its effective functioning.

Additional objects, advantages and features of invention reside in the construction, arrangement and combination of parts involved in the embodiment of the invention as will appear from the following description and accompanying drawings, wherein:

Figure 1 is a diametrical section of a mine embodying my invention;

Figure 2 is a fragmentary section on the line 2—2 of Figure 1;

Figure 3 is a reduced section similar to Figure 1 of the operating plate, firing pin and detonator in safe position under load-operation;

Figure 4 is an elevation of the mine to a reduced scale;

Figure 5 is a horizontal section on the line 5—5 of Figure 1, reduced;

Figure 6 is an enlarged detail section of the pull igniter in operated position;

Figure 7 is a perspective of the safety key;

Figure 8 is a similar view of the setting knob;

Figure 9 is a section on line 9—9 of Figure 1 to an enlarged scale;

Figure 10 is a fragmentary vertical section of a modification;

Figure 11 is a top view on an enlarged scale of the modified primer carrier of Figure 10, in safe condition. Figure 11*a* is a development of the arming barrel of Figures 10, 11 and 12 as indicated by the line 11*a*—11*a* of Figure 11.

Figure 12 is a view of the primer carrier of Fig. 10 armed;

Figure 13 is a view of a modification of the carrier of Figure 11 in safe position;

Figure 14 is a view of the modification of Figure 13 in armed position;

Figure 15 is a view similar to Figure 10, of a further modification in safe position;

Figure 16 is a similar view thereof in armed position;

Figure 17 is an elevation of the detonator assembly of the last mentioned modification;

Figure 18 is a section on the line 18—18 of Figure 17;

Figure 19 is a section on the line 19—19 of Figure 18;

Figure 20 is a fragmentary view similar to Figure 1 of a still further modification;

Figure 21 is a fragmentary section of a modification of the firing pin mounting;

Figure 22 is a similar view of a combined push-pull single detonator mine;

Figure 23 is a similar view of a further modification using coil springs;

Figure 24 is a similar view of a small pressure operated mine of simpler detail.

Referring to the drawings, there is shown a mine comprising a base cup 20, of circular form having a flat bottom 21 and a bounding substantially cylindrical wall 22 thickened at its planiform top edge and rabbeted at its inner side to receive a flat top plate 23 and interposed gasket 23', the two constituting a case within which a suitable explosive may be contained. The cup may be formed of ceramic material (for which reason it is shown as being comparatively thick throughout the cup bottom and wall), while the plate 23 is preferably formed of one of the strong rigid plastics which are adapted to be machined and assembled in mechanisms with close tolerances.

Upper detonator

The plate 23 is held in place by a plastic detonator assembly case 24 connected between the bottom 21 and plate 23. The plate is formed with a central interiorly threaded opening and depending flange or neck 25 into which is screwed the tenoned head 26 of the case 24. The plate 23 is recessed or dished at the upper side as at 27, in its central part, for a purpose which will appear. The detonator case is formed with a thin cylindrical wall 28 of suitable diameter the lower edge of which has formed thereon a planiform perimetral flange 29, set in a rabbet 30 formed around the lower edge of a central opening 31 through the bottom 21. A suitable gasket or other seal 32 is interposed between the flange 29 and the bottom of the rabbet. The head 26 is centrally tapped to receive an exteriorly threaded tenon and detonator cup 33 formed on a concentric cylindrical body 34 of plastic material having a large transverse chamber bore 35 and around which there is secured a thin cylindrical cover or case wall 36 also formed of a plastic set and secured in a relieved peripheral part 37 of the body 34. This body is formed with a head flange 39 set flush in the rabbet 30 outwardly of the flange 29 of the case 24, with a gasket or other seal 39' interposed. The chamber 35 accommodates a booster charge 40. The body 34 has an outer flash port 41 centrally therethrough outwardly of which there is an interiorly threaded recess 42 in which may be screwed the tenon 43 of a case 44 of the pull igniter 45, which may be used alternatively with the top detonator 70 to be later described.

The pull igniter

In the present instance the pull igniter (Figs. 1 and 6) includes a percussion primer 46 set in a bore 47 through the tenon 43, this bore being slightly larger than the port 41. A waterproof cover disc 48 is secured in the bottom of the recess 42 against and across the flash port 41 and at the inner end of the bore a similar cover 49 is set in an enlargement of the bore. Immediately below this the case 44 is enlarged to afford a cylindrical coaxial chamber 50 in which there is reciprocable a head 51, slotted to avoid dash pot action and having an upwardly projected firing pin 52 proportioned to enter the primer 46 on upward movement of the head 51. This head has on its underside a tubular shank 53 having two opposed openings 54 through its wall. A safety sleeve 55, mounted in the case 44, and has a cylindrical wall part spaced from the sides of the case, an inner conical annular flange or seat 56, and an outer flange 57, the latter being set against the end of the case 44, with a gasket 57' secured by a cap 58 threaded to the end of case 44. The cap is centrally apertured and necked as at 59 at its outer part to support slidably a detent or pull pin 60, which has a head 61 exposed for connection to trip wires or to various operating means, as well understood in the art.

The pin is reduced at its upper part 62 to engage slidably in the tubular shank 53 of the firing pin. The latter extends downwardly through the seat 56, and the reduced part of the pull pin extends upwardly within the shank 53 to a distance above the seat 56. Confined between the head 51 and cap 58 around the sleeve 55, there is a pin operating spring 63. This pin is held against action by means of balls 64 set loosely in the openings 54 of the pin shank next to the seat 56 and between the reduced pull pin part 62 and sleeve 55. The reduced part of the pull pin is circumferentially grooved to receive a portion of the balls therein so that upward movement of the pin is prevented by the balls.

The balls may be of hard plastic and the end of the pin longitudinally slotted at 65 to be compressible or deformable in response to a pull on head 61. Thus when pin 60 is withdrawn, the balls, already pressed against the conical seat 56, will be fended inwardly by the seat 56 until they clear the opening through the seat, and permit firing movement of the pin in response to thrust of spring 63.

The pull pin is held positively in safe position by means of pin 66, inserted through transverse openings 67 in the neck 59 and pull pin while the latter is in full inserted position.

All the parts in the pull igniter may be of plastic materials except possibly the spring 63 and rubber gaskets.

Composition of detonators

The detonator cup 33 is formed with a flash port 33' at its lower end communicating with the chamber 35 and against which is set a detonator 70 of approved composition, which may be of the same materials as that in the primer of the pull igniter, but inverted, for response to percussion by a firing pin 105 mounted thereover. An outer component 71, of an approved percussion mixture is provided in each of these detonators, a body of fulminate of mercury being also suitable for this percussion component. Inwardly of this I have employed a larger body of lead azide 72,

and inwardly of the latter a still larger quantity 73 of tetryl. The booster has also consisted of tetryl, and in the space in the cup around the detonator assembly case 24 I have used a bursting charge 69 of T. N. T.

It will be seen that the cup 33 is of such length that when screwed into the head 26 its upper end is slightly above the head, and projects upwardly within the dished or recessed part 27.

Belleville spring and mounting

The upper side of the top plate 23 is provideo with an upstanding, concentric annular, boss or flange 74, close to the edge of the plate, having a planiform top face, and rabbeted at its inner side to provide an annular seat 75 for the base or periphery of a disc or Belleville spring 76. This disc has a central opening and is formed with an initial set in slightly dished or conical form.

The spring 76 is preferably formed of a multi-laminated plywood, impregnated thoroughly and bound with a suitable plastic or other hardening and waterproofing material or materials. The boss 74, and consequently the diameter of the spring, is of little less diameter than the cup, and the altitude of the dished shape is very small in proportion to its diameter. Its extent of movement for full stroke of the firing pin in the particular construction illustrated is in the neighborhood of one-thirteenth of the diameter of the disc, although this may be varied to some degree either way. The drawing Fig. 1 is approximately full size of one embodiment of the invention. The disc is secured or retained over the seat 75 by a series of circumferentially spaced large headed fillister screws 77 engaged in the boss and projecting inwardly over the rabbet 75 and also projecting outwardly from the boss a short distance for a purpose to be explained. The screws are of a strong plastic.

Operating plate mounting

An operating plate 80 of strong ceramic material is mounted over the cup, spaced above the plate 23 a distance and arranged for vertical movement a short distance. It is nearly equal in diameter to the cup wall, and is provided with a depending perimetral wall 79, having a broadened lower edge adapted to rest at times on the top edge of the cup wall 22, where a cushion facing 81 may be applied if desired to distribute pressures communicated through the operating plate in case of lack of sufficiently uniform contact between the opposed wall surfaces which might cause fracture of one or the other with possibility of failure to operate subsequently, or a premature action.

The lower edge portion of the wall 79 is formed with inwardly projecting segmental flanges 82 of a number equal to the number of screws 77, being so spaced and each of such extent as to enter between the projecting parts 78 of any two screws 77 when the plate 80 is presented from above in concentric relation to the cup. Eight each of the screws and flanges are shown, but a greater number may be used if desired. By rotating the plate 80 slightly after passage of the flanges 82 below the level of the heads of the screws 77, the flanges will engage under the screw heads and so retain the parts against separation and in initial operative relation. The lower sides of the flanges 82 form continuations of the lower edge face of the wall 79 and are of such thickness in relation to

the height of the annular boss 74 that a range of vertical movement of the operating plate over the cup is permitted, sufficient to operate the Belleville spring 76 from its initial set position toward its lower operating limit over a distance slightly beyond its dead center or position of static force condition, as will appear. For so operating the spring 76, a downwardly projecting transversely rounded annular forcing or pushing rib 83 is formed on the under side of the operating plate, of such altitude when the plate is in its stated initial operative position that the rib 83 engages the upper side of disc 76 in a circle having a radius equal to about half the radius of the disc, and holding the disc under stress appropriate for effective action and to hold the operating plate firmly pressed upward, so as to prevent looseness of the latter when free from depressing force, as well as to insure immediate response of the spring to downward movement of the operating plate, compensating for some variation from standard thickess of the disc, and other errors in proportions of parts, and for wear which might occur from repeated safety operations which will be referred to herein.

The rib 83 as shown engages the disc midway between its inner and outer edges, but for greater acceleration of spring action may be nearer the outer boundary within practical operating limits. The operating plate is sufficiently recessed on its underside adjacent the depending wall 79 to clear the boss and screws 77 for all operating positions of the plate. The raised perimetral outer part 84 thus formed on the plate 80 is extended inwardly somewhat to afford a broad flat annular load-receiving top surface adapted to be readily depressed by engaging loads, the forcing rib 83 being located at the inner boundary of this broad annular part 84, so that depressing force applied to the plate 80 is transmitted to the disc through material immediately adjacent the point of origin of such force in the device.

Setting device

The plate 80 is formed with a central depression 85 within the radius of the rib 83 and raised part 84, and a circular setter key opening 86 is formed through the center of the plate, bounded by a circular boss 87 recessed or rabbeted as at 88 (Fig. 2) around the opening 86 over an angle of 280 degrees, more or less leaving a lug or abutment 89 within an angle of 80 degrees more or less at one side of the recess extending to the opening 86. Diametrically opposite radial slots 90 are formed through the plate extending from the opening 86 in a plane parallel to one side of the abutment 89, so that one slot is immediately beside the abutment and the other opening through the rabbet or recess 88 opposite.

A setting key 91 (Figures 1, 2 and 7) is set revolubly in the center opening 92 through the Belleville disc 76 and also revoluble in the opening 86 over a limited distance. The key has a lower circular head 93 fitted and revoluble in the opening of the disc and is formed with a downwardly offset horizontal peripheral flange 94 receiving the inner edge portion of the disc thereover. A flat retainer ring 95 is set in the periphery of the head over the disc, and may be a split planiform spring washer sprung into a suitable groove in the head. An upwardly extended circular stem 96 (Figure 7) of the key is revoluble in the opening 86, being flattened at its upper part to the same thickness as the width of the slots 90 and at its extremity is

formed with a T-shaped head 97 with a thickness and radius to permit it to pass upward through the slots 90 and into the recess or rabbet 88, and, when turned out of alinement with the slots, to extend over the rabbet shoulder at 88, whereby it will be held against relative downward movement through the plate 80.

Over and enclosing the boss 87, there is a revoluble operating or setting knob 98 having a depending flange 99 snugly and revolubly fitted around the boss 87 close to the top surface of the plate 80. Opposed circumferential grooves 100 are formed on the side of the boss and inner face of the flange 99, in which there is set a rubber ring 101 serving as a retainer for the knob and as a seal, yieldable to manual force for removal or rotation of the knob, the friction between the ring 101 and abutting parts of the boss and knob being least while the grooves 100 are alined, and the ring 101 tending to return the knob to proper position if partly displaced. The flat top part of the knob lies closely over the boss and top of the T-head of the key normally, and is formed with two downwardly extended arms 102' fitting closely and slidably beside opposite faces of the T-head, so that when the knob is turned the key also will be rotated. The outer sides of the arms 102 are semi-cylindrical, conforming to the opening 86 so as to pass the abutment 89. The ends of the arms of the T-head project from between the arms 102' so as to engage the abutment 89 respectively at opposite limits of rotation of the head. At one of these limits the T-head will be at right angles to the slots 90, while at the other limit the T-head is alined with the slots and the entire key 91 is free to move downward through the plate 80. The key and knob are formed of plastic material.

Waterproof closure

Circumscribing horizontal channels 103 are formed in the exterior surfaces of the cup wall 22 and the wall 79 respectively, spaced from the respective wall edges, and a septum consisting of a closely fitted endless band or sheeting 104 of waterproof flexible fabric is engaged around the cup and operating plate extending upwardly and downwardly across both channels 103. A cord or other non-metallic tension element 106 is engaged tightly around the operative plate wall so as to press the material 104 snugly in the channel, and a similar binding 106 is laid around the lower edge portion of the waterproof fabric pressing it into the channel 103 in the wall 22. The space between the opposed edge portions of cup and operating plate is thus closed so as to prevent access of water or debris to this space or to the space over the Belleville disc, yet leaving the operating plate 80 free for repeated operation under safety conditions as will be explained and for final detonating action when required.

In the device as illustrated, when constructed with an external cup diameter of ten inches, and in the proportions shown in Fig. 1, a plywood one-eighth of an inch in thickness has been employed for the Belleville disc. Modification may however be made in accordance with the nature of materials available.

Firing pin and action

A firing pin 105 is provided axially on the underside of the head 93 of the key 91. This pin may be integral and of the same material with the head, or may be a small metallic spine set in the material of the head.

It is important to note that the space between the opposed edges of the operating plate 80 and cup 20 is substantially less than the distance between the detonator 70 and the point of the firing pin 105 when the parts are in initial position. Since the space between the edges mentioned determines the limit of operating movement of the plate 80, it will be clear that while the key 91 is in safe position the firing pin 105 cannot move further than the plate, and so cannot engage the detonator thereunder.

Manufacture

In the manufacture of this device, the cup assembly and operating plate, but exclusive of the pull igniter (which includes all parts in or on the case element 44 and its tenon 43), may be conventionally assembled as described, including the case element 24, bushing 37 and remainder of the detonator assembly, the guard disc 48 being in place. The pull igniter may then be put in place in the field, as required. Or the mine may be assembled with the pull igniter, and the latter discarded when the device is set as an anti-tank mine or the like. Before mounting on the base, the Belleville spring disc 76 is secured by the screws 77 after setting the key 91 therein, and the plate 80 then introduced thereover the T-head being positioned so as to enter the slots 90 by rotating the knob until proper alinement is secured, while the flanges 82 are alined with the intervals between the screws 77. The entry of the T-head being assured, the setting knob is rotated to the left, or counterclockwise until stopped by engagement of the T-head against the abutment 89, which is the safe position, so that the key and firing pin cannot be driven downward far enough to engage the detonator thereunder. The plate 80 is then pressed downward until the flanges 82 are below the screw heads 77 and finally rotated to engage the flanges fully under the outer edges of the screw heads 77. The material 104 is now applied and secured, whereby the plate 80 is held against further rotation on the cup. The knob 98 may be secured in place by positioning the ring 101 at the upper edge of the boss and pressing the knob downward into place, the ring 101 rolling against the opposed surfaces until it encounters the grooves 100 into which it immediately expands, holding the knob in place until drawn upward with considerable force. The key is kept in "safe" position until the mine is armed for explosive action. The detonator assembly including the bushing 37, case wall 35, head 34, and cup 33 may now be safely put in place from beneath the cup by simply screwing the cup 33 into the head 26 in the base of the mine.

Use and operation

The mine may be set in roadways, tracks and fields in the manner usual with prior mines for anti-tank and other uses.

However, my mine may be set in such situations while still occupied and in use by the forces setting the mines, by first insuring that the key 91 is in the safe position. The mine may then be placed in roads and fields flush with the surface and suitably camouflaged, or may be set below the surface and covered with a proper amount of road or field material, sod, or earth, as the case may be.

While thus located in final position, with the key in safe position when a vehicle wheel or track

element passes thereover, the operating plate will be depressed until its depending wall 79 rests on the cup, where movement of the plate will stop, and the load will be sustained by the cup 20. In this movement of the operating plate the rib 83 will engage and press the intermediate portion of the Belleville disc downward, as shown in Fig. 3. The key 91, however is supported by its T-head on the rabbet shoulder at 88, and the inner edge of the disc resting on the key head flange 94, is thus prevented from moving downward to its normal operating or full stroke limit, but as the rib 83 presses downward, the inner portion of the disc flexes upwardly while the firing pin stops short of the detonator.

When it is desired to arm such a mine while located as last described sufficient covering material is removed, or the fingers inserted through the covering material to permit rotation of the knob 98, without disturbing the placement of the mine otherwise, and the knob turned to the right until stopped by one arm of the T-head engaging the abutment 89 (Fig. 2). This arms the mine, positioning the T-head in line with the slots 90, free to move downwardly therethrough. On account of the upward pressure and position of the spring disc, however, the key is retained in its elevated position and may at any time be turned back to safe position in case of need for further safe action. This makes it possible to pass delayed material after arming of mines in a mined area.

When armed as described, on engagement of the mine by a weight or force sufficient to depress the plate 80, the operating plate 80 yields and its rib 83 presses the underlying portion of the spring downward so that the conical elements of the spring move downward pivotally with a lever action corresponding to a lever of the third order having the shoulder of the boss 74 as a fulcrum, the operating force applied by the rib 83, and the load being represented by the resistance of the central portion of the disc material to compression which the movement described involves.

The degree of movement permitted the plate 80 is sufficient for the rib 83 to press the disc to a planiform shape or to dead center position and sufficiently beyond for the stress and inherent elasticity of the strained material of the disc to react with sufficient force to initiate an independent further and accelerated downward movement of the central portion of the disc, capable of moving the firing pin 105 into the detonator 70.

If the pull igniter is to be utilized, the key 91 is left in safe position in most cases, although the mine may be armed at top and bottom, so as to operate by either pressure on top, or a pull communicated to the head 61 of the pull pin 60.

The operating plate 80 may be readily removed in order to permit installation of the mine in more confined situations, where the pull igniter is to be employed. Draw wires, cords or other means may be connected to the head 61 of the mine, and extended to objects or means which may be moved by enemy action, as well understood. When installed as a pull operated mine, the necessary connections being made to the head 61 of the pull pin, and the necessary preparation of the emplacement having been made, the safety pin 66 is drawn and the mine set in place in accordance with usual practices with pull-operated mines.

My mine may be quickly set in beach sands and on-shore sea bottoms where pressure of landing boats and vehicles in course of unloading may cause its detonation.

It is an advantage of my invention that tilting of the operating plate 80 in any direction causing contact of the edge portions of the plate and cup will result in operative functions of the mine, due to the leverage exerted when a side portion only of the disc is depressed, the radial structural parts of the disc at the depressed part serving to depress the whole central part of the same, so that it passes dead center.

For the last named purpose, the disc is made of sufficient thickness to afford the necessary rigidity for the function indicated and the range of relative movement between cup and operating plate, as well as the related spacing of the firing pin 105 from the detonator 70, should be provided for. That is to say, when constructed for detonating action by tilting movement of the plate 80, complete translative depression thereof will afford a greater degree of movement, and the spacing of the firing pin from the primer initially must include this extent of movement and such addition as the margin of safety requires.

To enable introduction of the bursting charge 69 after assembly of the top plate 23 on the cup, a circular loading port 107 is provided in the plate 23 in a suitable location and closed by a friction cap 108 of a bellows type, so that if a liquid or fluid explosive is employed, its expansion and contraction will be accommodated.

In Figures 10 to 12 there is illustrated a modification of the invention in which I have avoided exposing the upper detonator directly under the firing pin except after the device begins to function normally after arming. By this construction, while the device is set in safe position, if there should be such fracture of the operating plate as to allow depression of the firing pin, it will not encounter the detonator 70.

In this construction, the mine may be identical with that first described, except as to the manner in which the upper detonator is constructed and incorporated (the firing means being the same as before) and in the views mentioned parts previously described and here unchanged bear the same reference characters. Those modified and closely corresponding to previously described elements may bear the reference character previously applied but with the addition of a prime mark.

The top plate 23 of the base part of the mine remains the same as before, but has an assembly case 24' screwed into the depending neck flange 25 of the case 24' being substantially the same as the case 24 except that the head portion 26' thereof is formed with a larger interiorly threaded opening, the lower part of this case being flanged and set in the bottom of the cup as at 29 in the species of Figure 1.

The body 34 of Figure 1 is replaced by an upper body 110 of cylindrical form exteriorly threaded at its upper part and screwed into the opening in the head 26' and extending downwardly a distance. Fitted snugly around the lower periphery of body 110 there is a thin case wall 111 the lower edge of which is set in a rabbet 112 formed around the upper edge of a lower body 113 similar to the lower part of the body 34, and constituting a bushing, recessed and interiorly threaded in the same size and shape as the recess 42 in the body 34, so as to receive the pull igniter as before shown. Within the case wall 111 between the parts 110 and 113 there is a booster charge 114.

A flash port 115 is formed concentrically in the lower end of the body 110, and an eccentric cylindrical chamber 116 is formed in the upper part of this body open at its upper part on an axis parallel to the vertical axis of the body 110; and set revolubly therein is a cylindrical barrel 117. Formed through the barrel there is a small vertical bore eccentric to the axis of the barrel and constituting a primer cup 118, located so that on rotation of the barrel it will move in an arc including the axis of the body 110 and consequently at one position of the barrel in rotation the cup will be alined with the firing pin 105 and flash port 115. In this cup there is set flush with the top of the barrel a detonator 119 of conventional composition. The upper end of the barrel sets above the body 110. Near the cup 118 in a clockwise direction as viewed from above, a bore 120 is formed in barrel 117 and over which there is vertically reciprocable an arming pin 121, depending from the lower key head 93' on which it is rigidly fixed. The top end of the barrel 117 is formed with a curved channel 122 extending in a clockwise direction from the hole 120 concentric with the axis of the body 110 over an angle of ninety degrees, from which point a spiral cam surface 123 extends downwardly clockwise, this cam being concentric with the barrel 117 rather than body 110 and including an angle of ninety degrees about the axis of said barrel within a depth a little less than the full stroke of the pin 121. There a drop 121' occurs to a depth measured from the bottom of the channel 122 parallel with the axis of barrel 117 at least equal to the vertical movement of the pin 121. At the upper position of the keyhead 93' the pin 121 clears the hole 120 so as to be movable in the channel 122 clockwise when the key is rotated from safe position of Figure 11 to armed position as heretofore described. In the armed position the pin 121 is disposed over the upper end of the cam surface 123. When in this position downward full stroke of the head 93' will cause the pin 121 to engage surface 123 and rotate the barrel 117 counterclockwise through an angle of ninety degrees.

The cup 118 is located on a radius of the barrel 117 at an angle of ninety degrees in a clockwise direction from that radius of the barrel which intersects the axis of the body 110 when the parts are in safe position as shown in Fig. 11. Consequently, as the cam surface 123 is inclined so that pin 121 rotates barrel 117 through ninety degrees in a little less than the full stroke of the pin, the cup 118 and its primer 119 will become alined with the firing pin 105 just prior to completion of a full stroke of the pin 121, pin 105 will be driven into primer 119 as the end of pin 121 is forced into drop 121'. A hole 124 is located in barrel 117, 90° counterclockwise about the axis of the barrel from cup 118, in position aligned with firing pin 105 when the mine is in safe condition as shown at Figure 11. In order to hold the barrel against accidental rotation, a spring 125 is mounted on the body 110 beside the barrel. This spring has an arm 126 extending clockwise and inclined inwardly across the channel 122 with its extremity 126 curved outwardly to form a detent 127. See Figure 11. This detent engages a notch 128 in barrel 117 to yieldingly resist rotation thereof. The material of the barrel between its periphery and the channel is cut away to permit outward movement of detent 128, clear of the barrel. Then, as pin 121 rotates clockwise as key 91 is turned to arm the mine, its final movement in rotation cams detent 127 out of notch 128 and clear of barrel 117. Spring 125 includes a short arm 129 frictionally engaging the barrel at all times.

In the operation of this modification, the firing pin 105 is controlled as before, but the primer 119 is out of the path of the firing pin until the operating plate 80 is depressed after arming. In safe position, when the plate 80 is depressed, the arming pin 121 simply moves into the hole 120, keeping the barrel in safe position while the firing pin moves part way down. If the operating plate should become fractured or the firing pin freed in any way the firing pin would simply enter hole 124 without effect. The detonator is protected from the head 93' by engagement of the depending flange part 94' upon the upper end of the body 110.

In operating the knob 98 and setting key 91 for arming, the structure of the T-head, and on the plate 80, together with the knob 98, function as in the species of Figure 1 to stop the rotating parts in armed position, although the primer 119 is still out of line with the firing pin, and so complete arming is not accomplished. The setting operation moves the arming pin 121 along the channel 122 to position over the start of the cam surface 123, pressing the spring arm 125 aside to free detent 127 from notch 128. When, now, the plate 80 is depressed, the pin 121 contacts surface 123 causing counterclockwise rotation of the barrel 117 in body 110, and positioning the primer 119 in the path of the firing pin immediately before the latter engages the primer, and while the pin has a substantial distance over which it will be moved by spring 76. In the completion of this movement pin 105 is driven into the primer with resultant detonation of the booster charge 114 and bursting charge.

In Figures 13 and 14 a further modification of the general form and function last described is shown wherein the detonator assembly includes the same principal elements, and the same arming pin 121 is utilized. The barrel 117' has the detonator 119' and well hole 124' located as in the species of Figures 11 and 12, but the hole 120, channel 122, cam 123, and spring 125 of Figures 11 and 12, are omitted. Instead, the barrel is provided with a short radial slot 130 in its top surface of a depth throughout to accommodate the pin 121 to its full stroke depth, the end portion of the pin 121 remains in the slot at all times, so that rotation of the setting key (accomplished as before) will turn the barrel likewise.

When the device of Figures 13 and 14 is in safe position as in Fig. 13, the pin 121 is at the outer end of the slot 130, the well hole 124' is on the axis of the firing pin, and the device then functions as in the previously described modification when in safe position.

This device is armed by turning the knob 98 as before, which causes the arming pin 121 to press against the side of the slot 130 so as to turn the barrel toward the armed position. In this movement due to the difference of location of the axes of rotation of the key and the barrel, the pin 121 slides inwardly in the slot 130 and outward until, when the key is stopped at armed position by the abutment 89, the pin 121 will be located little if any further from the outer end of the slot 130, and the detonator will have been moved to position under the firing pin, as in Fig. 14.

A still further modification of the detonator assembly is disclosed in Figures 15 to 19 inclusive where the benefits of safety in case of

fracture or fault permitting premature depression of the firing pin excessively, are attained. In the illustrations thereof, parts previously described and which are unchanged are designated by the same reference characters and those closely corresponding to previously described parts have similar reference characters with the addition of a double prime mark.

All of the parts required are the same as before described in reference to Figures 10 to 12 except the arming pin and the barrel and its manner of mounting. An upper detonator assembly body 110'' is provided of identical size and external form as the one 110 and likewise mounted. Provision for a barrel mounting consists of a transverse horizontal cylindrical bore 131 through one side of the body 110'' but stopping short of the opposite side, and a concentric stud 132 is formed on the closed end, on which rests one end of a barrel 133 having a suitable bearing recess in one end fitted on the stud but of a depth longitudinally of the barrel less than the length of the stud, the barrel resting freely for rotation in the bore. A flash port 134 opens from the lower side of the bore through the bottom of the body 110''. In the barrel 133 a diametrical detonator cup bore 135 is formed, stopping short of the periphery of the barrel at the right hand side as viewed in Fig. 15, where a slightly reduced port and shoulder 136 are formed adapted to aline with the port 134 when the barrel has been rotated to armed position. The end of the barrel opposite the stud 132 has connected eccentrically thereto one end of a spiral torsion spring 137, the opposite outer end of which is anchored on the body 110'' and urging the barrel counterclockwise from the position shown in Fig. 15. A hole or recess 138 is formed in the end of the barrel next the stud and close to the periphery of the barrel and set longitudinally into this hole there is a short arm 139 formed at right angles on the lower end of an upstanding vertical push rod or arming rod 140 engaged slidably in a suitable guide hole 141 formed in body 110'' the rod being extended upwardly a distance above the body 110'' and top plate 23. This rod is offset from the vertical axial plane of the barrel in a clockwise direction as seen in Figure 15. The key head 93'' in this device may be flat across its underside, instead of recessed as in the previously-described species, but otherwise the key device 91'' here shown is the same as the key 91 first described, and similarly controlled and set for safety or action. There is a coaxial firing pin 105 on the under face of the head 93''. Within the bore 131 the rod 140 lies in a space 130' between the end of the barrel and the end of the bore, caused by difference in length of the stud 132 and recess in the end of the barrel. The upper end of rod 140 is spaced below surface 142 as shown in Figure 15. This permits a certain free movement of the head 93'' without operating the arming rod 140. A slot 143 is formed in and radially across the upper side of the body 110'' opening through the side of the bore 131 over somewhat more than a radius of ninety degrees and alined with the cup bore 135. The slot is laterally or radially extended from the barrel a point adjacent the side of the body 110'' distant from the rod 140, and stops close to the hole 141 through which the rod 140 operates. The hole 138 may be extended radially inward to permit movement of the arm 139 in a straight path from its upper to its lower position in operation.

Set in the cup bore 135 there is a primer 144 the sensitive end of which projects from the barrel, its inner end being set against the reduced bottom or shoulder end 136''. The projecting end of the primer extends into the laterally extended part of the slot, engaging the lower end thereof when the primer is in horizontal position as in Fig. 15, and serving as a stop opposing reaction of the spring 137. Movement of the barrel clockwise as viewed in Fig. 15, will be checked by the projecting end of the primer engaging the material of the body 110'' at the inner end of the slot 143.

In the operation of the device of Figures 15–19 when the setting key is in safe position, depression of the plate 80 will move the head 93'' downward only the distance represented by the space between the wall 79 and cup 20 (Fig. 1), since the key is locked to the plate 80. This movement will move the under face of the head 93'' downward to or slightly beyond the upper extremity of the rod 140 with little, if any, movement of the rod. Such movement of the latter as may occur will rotate the barrel 133 slightly, but not sufficiently to expose the sensitive end of the primer to the action of pin 105. Upon relief of pressure on the plate 80, the spring 137 will return the barrel to initial position as the head 93'' rises.

In the active or arming position of the key 91'', when the plate 80 is depressed, the spring 76 will be pressed downward slightly beyond dead center, and will then react further driving the head 93'' downwardly with full stroke, so as to engage and push the rod 140 downward a sufficient distance for the arm 139 to rotate the barrel clockwise through an angle of ninety degrees from the position shown in Fig. 15 to that shown in Fig. 16, at which time the firing pin will have engaged and entered the primer 144 initiating detonation of the explosive train as before indicated.

In Fig. 20 there is illustrated a modification of the manner of sealing the space between the base and operating plate, and a simplified safety device.

In this view the operating plate 80*a* may be constructed to rest on the Belleville spring 76 as before, but the securing screws 77 are omitted, the spring 76 being simply set in the rabbet seat 75 before described. The wall of the cup 22*a* however is made of substantially larger diameter, or the diameter of the operating plate reduced, and the wall 145 of the cup 22*a* extended upwardly beside the depending wall 79*a* of the operating plate in slightly spaced relation.

Circumferential grooves 146—147 are formed in the opposed faces of the wall parts 79*a* and 145, and an elastic rubber ring 148 or the like is set between the walls under lateral compression thereby. The grooves are of substantial vertical extent so that the ring may be spaced from the upper and lower sides of the grooves at times, and when the device is free of pressure, with the plate 80*a* supported by the spring 76, the groove 146 extends some distance above the ring while the groove 147 extends a distance therebelow. The ring 148 is engaged by the lower and upper sides of the grooves 146, 147 by the upward pressure of the spring 76 on the operating plate and serves as a means to limit the upward movement of the operating plate. On depression of the operating plate, downward movement of the wall 79*a* relative to the wall 145 causes the ring to roll on the bottoms of the opposed parts of the

grooves, maintaining a seal throughout this movement.

The operating plate in this last named device is provided with an operating rib 83*a* on its underside bearing upon the top of the spring midway between the seat 75 and the central support key 91*a*. This key is formed with a simple cylindrical stem 149 of a length to project above the central plain central part of the operating plate, and its lower part includes a head 93*a* with supporting flange or rabbet supporting the edge portions of the spring around its central opening, and having a firing pin 105 on its underside as before.

The key 93*a* may be held in safe position by the insertion of a safety pin 150 through an aperture in the upper end part of the key close to the top face of the operating plate. Withdrawal of the pin arms the device.

In Fig. 21 a further modification of the mine is shown, in which the top plate 23*b* of the base, set in a rabbet of the cup as before, is provided with an upstanding flange 151 having a cylindrical outer face close beside the depending wall 79*b* of the operating plate 80*b*. The latter has the presser rib 83*b* and the spring 76 is rested on top of the flange 151 so as to be engaged by the rib 83*b* and so support the plate. The firing pin is fixed on the underside of a spool-like driver 152 corresponding to the head 93, but having no part extending through the plate 80*b*. The driver is formed with a flange 84*b* receiving and supporting the inner edge of the spring and retained by a flat ring 153 sprung into a groove in the driver above the spring and projecting over the latter. A hole 154 is formed in the upper side of the driver with a lateral horizontal extension 155 at its lower part, the hole being eccentric to the center of the plate 80*b* and spring and of larger diameter. Engaged concentrically and revolubly through the plate 80*b* there is a safety key 156, consisting of a simple bar stock extended through the hole 154 as a shank 157 and having a key arm 158 extending initially into the extension 155 of the hole 154. With the spring and driver in elevated positions and the arm 157 in the lateral extension of the hole 154, the upper end portion of the key extends at right angles close against the top face of the plate 80*b*, forming a setting lever 159. It may be noted that the hole 154 is of sufficient extent opposite the extension 155 to permit the arm 158 to be withdrawn upwardly therethrough when the key is rotated so as to swing the arm 158 out of the extension 155. Consequently, swinging of the lever 159 over an angle of 180 degrees will arm the mine, freeing the driver for movement with its firing pin in the manner before described. A seal 160 consisting of a disc of flexible tough material may be laid over the lever while in safe position as illustrated in Fig. 21 and cemented to the plate 80*b*, so as to hold the mine in "safe" condition until it is to be armed, when the seal may be removed while the key is moved to armed position. If the seal has a permanently "tack" adhesive under face, it may be returned to sealing position to hold the device armed.

In Fig. 22 the mine is illustrated as a combined push-pull detonator, without requiring more than the single detonator and firing pin operated by the Belleville spring.

The base element may be the same as before described if desired or provision for an additional pull igniter omitted. The Belleville spring is arranged to be purposely and permanently placed under strain at will, so as to tend to operate the firing pin, restrained by the previous safety key arrangement, and a pull-operated release provided operable after the key is set in armed position.

A link 161 is connected pivotally between ears 162 on the top plate 23*c* near the center of the mine and extended through an opening or slot 163 in the spring 76*c* with a clearance all round and slidably through an opening 163′ in the operating plate 80*c* and above. The upper end of the link is provided with a transverse rigid cross pin 164. A straight lever 165 is provided having two spaced fulcrum cam plates 166 receiving the link between them. The identical plates 166 have a low flat 167 resting on the plate 80*c* in the raised position of the lever shown at Figure 22. Each plate has a slot 169 extending from its back edge inwardly and downwardly when the flat 167 is engaged with the plate 80*c*, each slot receiving a respective end of the cross pin 164, but movable along the slot when the lever is swung counterclockwise from the position shown in Figure 22, so that lever 165 may be removed from the mine. The plates are shaped to form cam risers 170, from flats 167. The flats 167 are located at such distance from the axis of the pin that the rib 83 engages the spring sufficiently to hold the flats against the plate 80*c* snugly and so hold the lever in raised or inoperative position.

When the lever is pressed downward the risers 170 press upon the plate 80*c* forcing it downward against the spring and the high parts of the cam portions pass dead center and so oppose return of the lever.

The upper end of the key device includes the same elements and the plate 80*c* and knob 98*c* include the same parts cooperative with each other and with the key 91*c* as in the case of the key 91 before described. In addition however, the key stem 96*c* is axially bored to receive slidably a pull pin 172 substantially similar to the one 60 before described, its inner end portion being split and the tangs thus formed being recessed on their outer sides to receive parts of balls 173 set in two diametrically opposite openings 173′ in the tubular part of the stem 96*c*. The opening 174 through the plate 80*c* is enlarged in its upper part so as to form a lower conical seat 175 at each side of the stem below the openings 173′ and to receive substantial parts of the balls over the seat. The knob 98*c* is apertured to receive an enlargement 178 of the pull pin and a pull ring 177 is formed at the upper end of the enlargement. The knob has two ears 178 extended upwardly beside the eye, and the enlarged part of the pin and the ears are apertured to receive commonly therethrough a safety pin 179 of usual form for such uses. The ears also prevent relative rotation of the pin.

In the use of the last described modification the mine may be used as first described (as an antitank mine) by swinging the lever 165 to the left (Fig. 22) until the slots 169 are in a position permitting the lever to be removed from the mine. The safety pin 179 is removed and the pull pin 172 also withdrawn.

The mine may then be made safe by turning the knob 98*c* as in the case of the structure first described, or may be armed by a reverse operation of the knob. The spring 76*c* is free of tension when the lever 165 is removed, and may operate in response to loading as at first.

In case it is desired to operate the mine by the pull pin, instead of removing the lever, the lever is turned clockwise as seen in Figure 22 to thereby place spring 76*c* under tension. The

spring will then drive the firing pin against the upper detonator when the key 98c is in armed position and the pull pin 172 withdrawn.

The ring 177 is first connected to the draw wires or anchoring means before withdrawing the safety pin 179. The key is then turned to armed position and the safety pin 179 withdrawn. Thereafter, when the pull pin 172 is withdrawn, its split portion yields to the balls 173, and after clearing the latter they are free to move further inward.

The spring 76c being under strain by reason of the pressure of the rib 83 thereon, now draws the stem 96c downward to cam the balls inward and thus permit unrestrained movement of the stem 96c, firing pin and spring downward.

It will be clear that while an important feature of my invention is a novel utilization of a disc type spring so that a non-metallic material may be used, other forms of springs corresponding to known forms of metal springs may be used should suitable new non-metallic materials of adequate strength and resilience become available, and metal springs of various forms may be employed as substitutions, with or without slight modifications of adaption.

Thus a simple metal bow spring can be substituted for the Belleville spring with practically no modification of structure although a simple straight bow spring of wood, as at present advised, would not function reliably.

In Fig. 23 there is illustrated a use of coil springs. In this instance the mine base 20d and an operating plate 180 are provided, of proportion and relative arrangement similar to those of parts 20 and 80 of Fig. 1. In place of the small annular flange 94, however, the firing pin 181 is provided with radial arms 182 extended radially a distance substantially equal to the radius of the rib 83, and supporting at their extremities helical springs 183 engaging the operating plate. A bridge plate 184 is mounted on the base, below the operating plate but above the arms 182, and having a central aperture in which the pin 181 is slidable, and holes 185 through which the upper end of a respective spring may pass.

On the underside of the plate 180 respective presser lugs 186 are engaged initially in the upper parts of the openings 185 and slidable downwardly through the latter to compress the springs. The firing pin stem is reduced and extended slidably through the operating plate and secured against downward relative movement therein by a manually removable safety pin 187. A flange 180' is formed on the under side of the plate 180 arranged to engage the large part of the firing pin before completion of full downward movement of the plate 180. On the large part of the pin within the opening 189 in the bridge plate a circumscribing groove 188 is formed spaced slightly from the top of the opening 189 when the firing pin is at the upper limit of its movement. A groove 190 is also formed circumferentially in the side of the opening 189, opposed to the groove 188 at the position of the parts stated and set between and fitting into these grooves there is a soft rubber ring 191, or the like. If desired the side of the opening 189 may be slightly relieved below the groove 190 as at 192. This rubber ring thus serves as a seal and also as a yieldable detent, opposing movement of the firing pin when the springs are initially compressed.

The downward movement of the plate 180 is limited to a distance less than that between the point of the firing pin and detonator, so that with the safety pin 187 in place, under full depression of the plate 180 the firing pin stops short of the detonator notwithstanding the compression of the springs.

With the safety pin out, when the plate 180 is depressed, it moves slidably downward around the firing pin, compressing the springs 183, and the force thus communicated through the springs to the arms 182 will cause compression of the rubber ring 191, the resistance of which will be overcome suddenly shortly before downward movement of the plate 180 is completed. The force of the spring may be proportioned to effect this action without positive aid, but the flange 180' engages the large part of the pin 181 after a substantial compression of the springs has occurred, and positively initiates movement of the pin to overcome opposition of the ring 191. Further movement of the firing pin requires substantially less force, the ring rolling between opposed cylindrical surfaces of the pin and hole 189. The large part of the pin clears the ring after a very short movement (which may occur during functioning of the flange 180') and the pin is then driven into the detonator.

It should be noted that the springs may be initially free of compression in the elevated position of the firing pin, so that the ring 191 is not required to sustain material compression until operative action of the plate 180 occurs.

In Fig. 24 a simplification of the device is shown in which a base 195 is provided having a main charge 196 and having set in its top a detonator and firing unit combined including a fuse body 197 suitably set into the main charge. The body is cylindrical, on a vertical axis, having a concentric chamber 198 open flush through the top of the body and having a central port 199 opening therefrom into a lower chamber concentric with the body and having a booster charge 200 therein. A primer 201 is fixed in the port and a firing pin 202 is vertically reciprocable in the chamber 198. The pin comprises a head 203 having a peripheral groove 214 and a pin 202 to detonate the primer. The wall of the chamber 198 is also grooved at 204 in alinement with the groove of the pin. The head is centrally recessed to seat a helical spring 205 the upper end of which is entered loosely in a recess in the underside of a dome-like pusher 206 of a diameter less than that of the chamber 198, but having a base flange 207 slidable in the chamber and retained by a screw ring 208 engaged on a relieved and externally threaded upper part 209 of the body 197.

The top plate 210 of the base 195 is formed with a flanged opening to receive the ring snugly fitted therein, and a case 211 fits the flange and is secured to the underside of the plate 210. A C-spring 212 is set under the flange of the opening in the plate 210, and over the shoulder 213 formed by the relief of the upper periphery of the body 197 to hold the detonator assembly in place.

An elastic ring 213 fits grooves 204 and 214 and functions in the same manner as previously described for ring 191, Figure 23. Groove 214 is closely adjacent the top surface of head 203 so that only a small movement thereof is sufficient to free it from ring 213.

I claim:

1. A full stroke firing device comprising a bowed plate spring, a support for its outer parts, a reciprocable member and operative connection between the same and spring connected centrally with the bow of the plate, operating means including a pushing member positioned to engage

the spring intermediately of said connection and the base of the bowed part, and means to limit operative movement of the pushing member to that position immediately beyond dead center position of the spring where the latter may independently react further in the direction of push applied, and a releasable connection between the operating means and said reciprocable member constructed to hold the latter in initial relation to said connection with the plate, whereby to limit movement of the firing device short of full stroke, at will.

2. A mine of the character described comprising a broad base element including a bursting charge and a central upper primer fixed therein, a circular dished plate type spring of comparatively slight altitude in relation to its diameter seated erect on said base element and secured in coaxial relation thereto, a firing pin mounted centrally thereof presented downwardly in alinement with said primer for detonative engagement with the latter under downward reaction of the spring when pressed beyond dead center, an operating member vertically reciprocable over the spring and having a downwardly projected portion arranged to engage the spring around its center and resting on the spring intermediately of its center and base, means being included to retain the operating member in concentric relation to the spring, said operating member having peripheral portions positioned to rest on the base member beyond operative positions of the operating member.

3. The structure of claim 2 in which the firing pin includes a safety connection with the operating member separable at will whereby at safe position of the connection, movement of the firing pin is limited to that of the operating member, the full stroke of the firing pin including a substantial component of motion beyond dead center position of the spring, and the operating member being arranged to engage the base short of full stroke movement thereof with the spring.

4. A full stroke firing device comprising a support, a bowed spring device having its extremities engaged with the support, an operating member over the spring having pushing parts thereon engaged with the spring intermediately between its central part and said extremities and movable to press the spring to and beyond its dead center position, means to limit movement of the operating member to an operated position when the spring is past dead center position, a firing pin and support for the central part of the spring comprising a member revoluble on the spring, and revoluble in said operating member, a key element thereon, said operating member and key element being constructed for sliding movement of the firing pin away from the operating member at one position of the key element in its rotation in the operating member and to interlock with the latter at another position, and means outwardly of the operating member to rotate the key element for the purposes described.

5. The structure of claim 4 in which said key portion is a T-shaped head, and the operating member is formed with an opening to fit the stem of said head revolubly with the arms of the head projecting beyond the sides of the opening, and having diametrically opposite slots to receive the arms of the head slidably therethrough.

6. The structure of claim 4 in which said key portion is a T-shaped head, and the operating member is formed with an opening to fit the stem of said head revolubly with the arms of the head projecting beyond the sides of the opening, and having diametrically opposite slots to receive the arms of the head slidably therethrough, said head having a stem portion in said opening initially and being flattened transversely to a thickness substantially less than the diameter of said opening, an annular boss being formed on the operating member and of an interior diameter coincident with the slots and having an abutment beside one of the slots extending over an angle of 90 degrees, and a key operating means on the operating member separably connected with the key.

7. A mine device comprising a base body having a bursting charge and an exposed detonator primer thereon, an operating plate of similar horizontal area and form vertically movable thereover, a bowed spring having extremities supported on the base, a firing pin medially on the spring alined with said primer, said operating member having pusher parts engaged with the spring intermediately between the center and extremities of the spring, a member being included revolubly connected to the spring centrally to support it in an initial inoperative position at times and having a key head fixed thereon said plate being centrally apertured and said key head having a stem part revoluble in said opening, said opening being slotted to receive the key head therethrough slidably when in one position only in rotation, an annular boss on the plate having an internal diameter coincident with the slotting of the opening and having an abutment beside the slotting subtending an angle of 90 degrees at the opening, a yieldable circumscribing septum between the plate and base, a seal for said opening and means to rotate the key.

8. The structure of claim 7 including a knob having a depending annular flange fitted around the boss, opposed perimetral grooves being formed in the opposed faces of the last named flange and boss, said seal consisting of a compressible elastic ring fitted between and in said grooves, said key head being flattened and said cap having depending arms spaced to engage on opposite sides of the key head when at the upper limit of its sliding movement in the said plate.

9. The structure of claim 7 in which the operating plate includes a depending perimetral wall, inward projections on its inner side spaced circumferentially, and correspondingly arranged retainer devices fixed on the base adapted to engage over said projections when alined therewith and adapted to pass between the said projections when the plate and base are rotated relatively through an angle to aline the projections with the intervals between said retainer devices.

10. The structure of claim 7 in which the operating plate includes a depending perimetral supporting wall, opposed to a top surface of the base, projections on the wall spaced circumferentially, and correspondingly arranged retainer devices adapted to coengage with the projections when alined therewith and adapted to pass between the projections when alined with the intervals therebetween, the space between the supporting wall and said top surface of the base being less than the extent of full stroke movement of that part of the spring engaged by the pusher parts, but more than the extent of movement of said parts from initial inoperative position to dead center position.

11. The structure of claim 7 in which said spring is an annular plate, an elevated annular seat being provided on the base receiving the

edge of the spring plate, retainers secured on the seat extending over the edge portion of the spring and also outwardly and constructed to form circumferentially spaced retainers for the operating plate spaced above adjacent top surface of the base, said plate being formed with depending support portions adapted to rest on the base at the lower limit of movement of the operating plate and having circumferentially spaced projections arranged to engage under the retainers at one position in relative angular movement of the operating plate and base on their axis and for passage of the projections between the retainers at another position in said relative movement.

12. A detonator means comprising a base member, a pressure responsive operating means thereover including a firing pin and safe setting means, a detonator comprising a booster case set through the base and having a primer exposed to said firing pin and having a second primer, a firing means including a spring loaded firing pin in operative relation to the second primer, and pull responsive releasing means opposed to firing movement of the second firing pin.

13. The structure of claim 1 including in addition a detent for the firing pin on said pushing means, pull pin means to release said detent, and manually operable means to move and hold said pushing member in pushing relation to the spring.

14. In a mine detonator, a base having a primer thereon a load responsive operating member having limited movement from an initial distal position toward the base, a firing pin reciprocable thereon in line with the primer having a full stroke movement to the primer greater than that of the operating member, a spring device in cooperative relation to the operating member and firing pin constructed and arranged to be tensioned against the firing pin by said movement of the operating member, said firing pin including a manually releasable safety setting key revoluble in the operating member to lock therewith at one position of the key, and free and slidable therein at another position, said key being tubular at the outer part in the operating member, and having a radial hole therethrough, the operating member having a slot beside the key inwardly of the hole, a detent in the hole and over said seat, movable into the key to clear the seat and a pull pin inserted in the tubular end of the key holding the detent outward and exposed exteriorly for extraction, and manually operable means to move said operating member to full operated position and to hold it fixed there.

15. The structure of claim 4 in which said key portion is a T-shaped head, and the operating member is formed with an opening to fit the stem of said head revolubly with the arms of the head projecting beyond the sides of the opening, and having diametrically opposite slots to receive the arms of the head slidably therethrough, said head having a stem portion in said opening initially and being flattened transversely to a thickness substantially less than the diameter of said opening, an annular boss being formed on the operating member and of an interior diameter coincident with the slots and having an abutment beside one of the slots extending over an angle of 90 degrees, and means to operate the key.

16. In a device of the character described, a circular base member, a relatively vertically movable circular operating member thereover a yielding supporting for the operating member, detonating devices operatively associated between the two said members responsive to downward movement of the operating member, said members having matched opposed bearing faces arranged to coengage at the lower limit of movement of the operating member, inward projections formed on one of said members spaced concentrically thereon, and outward projections on the other of said members correspondingly spaced and being of a size and adapted to pass between the projections of the opposite said member under axial relative convergent movement of the members, and to coengage therewith under relative rotation of the members to limit divergent axial movement of the members to a predetermined initial position.

17. The structure of claim 16 in which a flexible septum element is engaged around the two members and fixed thereto so as to form a seal, yieldable to downward movement of the operating member.

18. In a mine, a base element having a detonator, an operating member having limited movement toward and relative to the base, a firing pin mounted for full stroke movement to the detonator, greater than the movement of the operating member, a spring connection between the operating member and the firing pin, means on the operating member positively contacting the firing pin prior to full compression of the spring, manually removable means limiting the firing pin to the total motion of the operating means, and yieldable means to anchor the pin to the operating member in initial position in respect thereto.

19. In a detonator, a cylindrical case, a centrally-apertured cap secured over and closing the rear end of said case, a sleeve within said case and having a rear outwardly-flanged end clamped between said case and cap and having a reduced inwardly-flanged forward end, a hollow firing pin in said sleeve and slidably fitting and extending through said forwardly-flanged end, there being a plurality of apertures through the wall of said firing pin within said sleeve, a ball within each opening, spring means urging said firing pin forwardly into firing movement, and a safety pin extending through the aperture in said cap and having a split end extending within said firing pin, said spilt end engaging said balls to yieldingly hold the same in said opening and in engagement with the inwardly-flanged forward end of said sleeve to thereby hold said firing pin against firing movement under the urge of said spring means.

LYLE K. LILJEGREN.

REFERENCES CITED

The following references are of record in the file of this patent:

UNITED STATES PATENTS

Number	Name	Date
1,512,249	Sprague et al.	Oct. 21, 1924
1,781,328	Grayson	Nov. 11, 1930
2,123,829	Grayson	July 12, 1938
2,324,846	Joyce et al.	July 20, 1943
2,336,701	Rasmussen	Dec. 14, 1943

FOREIGN PATENTS

Number	Country	Date
69,728	Sweden	July 1, 1930
742,598	France	Jan. 4, 1933