PCT WORLD INTELLECTUAL PROPERTY ORGANIZATION
International Bureau

INTERNATIONAL APPLICATION PUBLISHED UNDER THE PATENT COOPERATION TREATY (PCT)

(51) International Patent Classification 5 : A43C 9/00, D04C 1/02

A1

(11) International Publication Number: **WO 95/12994**

(43) International Publication Date: 18 May 1995 (18.05.95)

(21) International Application Number: PCT/US93/10986

(22) International Filing Date: 9 November 1993 (09.11.93)

(71) Applicant: K-SWISS INC. [US/US]; 20664 Bahama Street, Chatsworth, CA 91311-6011 (US).

(71)(72) Applicant and Inventor: NICHOLS, Steven, B. [US/US]; 12540 Promontory Road, Brentwood, CA 90049 (US).

(74) Agent: KIMBELL, Daniel, R.; Drucker & Sommers, Suite 328, 9465 Wilshire Boulevard, Beverly Hills, CA 90212 (US).

(81) Designated States: AU, CA, DE, ES, GB, JP.

Published
With international search report.

(54) Title: SLIP RESISTANT SHOE LACE AND METHOD FOR MANUFACTURING SAME

(57) Abstract

A slip resistant shoe lace (10, 20) and a method to make same. A slip resistant shoe lace (10, 20) is provided by weaving strands (12, 24) having a conventional frictional coefficient with at least one strand (16, 22) having a higher frictional coefficiency, where the high-fricition strands (16, 22) do not extend beyond the outer perimeter of the slip resistant shoe lace (10, 20). The high-friction strands (16, 22) can be made by impregnating conventional strands (12, 24) with friction-enhancing substances such as resin or rubber, by using a unitary strand (16, 22) made of material such as rubber or soft plastic, or by using strands (30) with grooves or serrations (32) formed on its outside surface.

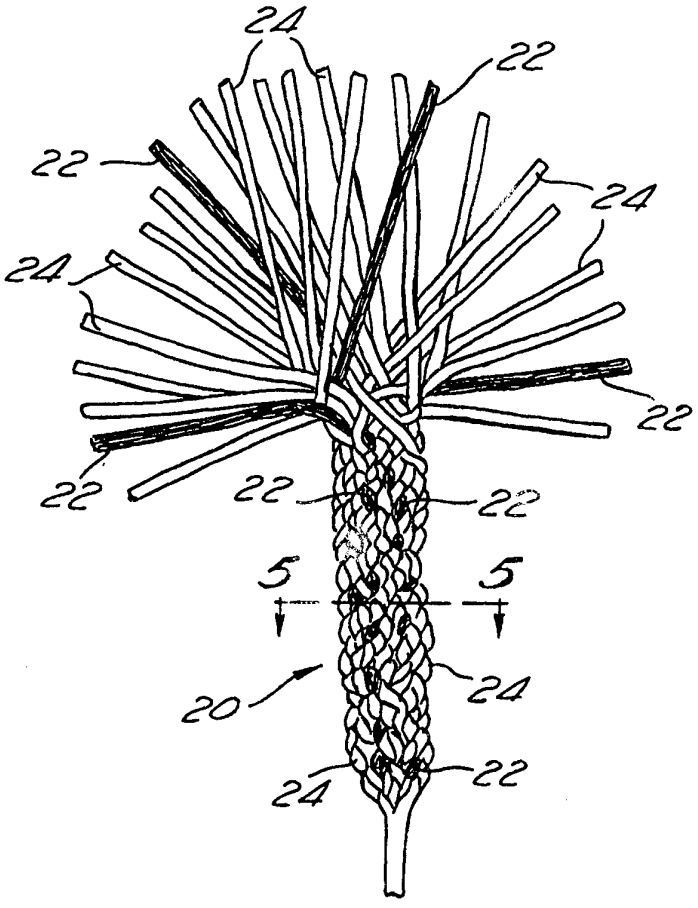

FOR THE PURPOSES OF INFORMATION ONLY

Codes used to identify States party to the PCT on the front pages of pamphlets publishing international applications under the PCT.

AT	Austria	**GB**	United Kingdom	**MR**	Mauritania
AU	Australia	**GE**	Georgia	**MW**	Malawi
BB	Barbados	**GN**	Guinea	**NE**	Niger
BE	Belgium	**GR**	Greece	**NL**	Netherlands
BF	Burkina Faso	**HU**	Hungary	**NO**	Norway
BG	Bulgaria	**IE**	Ireland	**NZ**	New Zealand
BJ	Benin	**IT**	Italy	**PL**	Poland
BR	Brazil	**JP**	Japan	**PT**	Portugal
BY	Belarus	**KE**	Kenya	**RO**	Romania
CA	Canada	**KG**	Kyrgystan	**RU**	Russian Federation
CF	Central African Republic	**KP**	Democratic People's Republic of Korea	**SD**	Sudan
CG	Congo			**SE**	Sweden
CH	Switzerland	**KR**	Republic of Korea	**SI**	Slovenia
CI	Côte d'Ivoire	**KZ**	Kazakhstan	**SK**	Slovakia
CM	Cameroon	**LI**	Liechtenstein	**SN**	Senegal
CN	China	**LK**	Sri Lanka	**TD**	Chad
CS	Czechoslovakia	**LU**	Luxembourg	**TG**	Togo
CZ	Czech Republic	**LV**	Latvia	**TJ**	Tajikistan
DE	Germany	**MC**	Monaco	**TT**	Trinidad and Tobago
DK	Denmark	**MD**	Republic of Moldova	**UA**	Ukraine
ES	Spain	**MG**	Madagascar	**US**	United States of America
FI	Finland	**ML**	Mali	**UZ**	Uzbekistan
FR	France	**MN**	Mongolia	**VN**	Viet Nam
GA	Gabon				

SLIP RESISTANT SHOE LACE AND METHOD FOR MANUFACTURING SAME

Technical Field

The present invention relates to the field of slip resistant shoe laces and a method of manufacturing same.

Background Art

Before the invention presented herein, others have devised slip resistant shoe laces. United States Patent No. 2,477,151 to Stapleton discloses a shoe lace comprising an elongate and relatively wide and relatively yieldable braided flat lace body member, with a braided and relatively unyieldable strand laced back and forth centrally through the body member, with those portions lying on the faces of the body member providing longitudinally spaced and raised, alternately disposed ribs on the faces of the body member. The braided strand is said to be preferably stiffened and made to have a high frictional characteristic by impregnating it with certain latexes and/or resins. The high-friction strand of the Stapleton lace is looped in and out through the flat body member after the body member is woven. This construction method not only requires an extra step in the manufacturing method, but also results in the production of a finished shoe lace which has a bumpy and irregular appearance.

Also, known in the art is United States Patent No. 4,930,196 to Laurin which discloses a slip resistant shoe lace having a normal lace body, but whose outside surface is sprayed with a line or lines of a colored rubber material in a separate step to enhance its slip resistant quality.

Disclosure Of Invention

It is an object of the invention to provide a slip resistant shoe lace which is easily manufactured in the conventional manner by braiding, weaving, knitting, or other conventional interlacing methods, but which is durable and has enhanced frictional characteristics to prevent the tied shoe laces from untying at the bow. Another object of the invention is to provide an economical and efficient method to manufacture the slip resistant shoe lace.

According to one aspect of the present invention herein, a slip resistant shoe lace is provided having a plurality of interwoven strands, and is characterized by:

a plurality of conventional, *i.e.* untreated strands of material, such as cotton, polyester, or nylon; and

at least one high-friction strand having a coefficient of friction higher than that of said plurality of untreated strands, said untreated strands and at least

one high-friction strand being interwoven together to result in said slip resistant lace.

A second aspect of the present invention is a method of manufacturing a slip resistant shoe lace comprising the steps of:

preparing a plurality of conventional, *i.e.* untreated strands of material;

preparing at least one strand having a higher frictional coefficient than said conventional strands; and

interweaving said conventional strands and said at least one high-friction strand together in such a manner that said at least one high-friction strand does not extend beyond an outer perimeter of the slip resistant shoe lace.

Brief Description Of The Drawings

The invention is described below in greater detail with reference to the drawings.

FIGURE 1 is a fragmentary top plan view of a first embodiment of the slip resistant shoe lace of the invention;

FIGURE 2 is a cross-sectional view of the lace of Figure 1 through 2-2;

FIGURE 3 is a fragmentary perspective view of the shoe lace of Figure 1;

FIGURE 4 is a fragmentary view of a second embodiment of the slip resistant shoe lace of the invention;

FIGURE 5 is a cross-sectional view of the lace of Figure 4 through 5-5;

FIGURE 6 is a side view of a third embodiment of a strand which can be used to weave into high friction shoe laces;

FIGURE 7 is a cross-sectional view of the treated lace strand of Figure 6 through 6-6; and

FIGURE 8 is a schematic showing of the manufacturing process to manufacture the shoe lace of Figure 1.

Best Mode For Carrying Out The Invention

In Figure 1, there is depicted a fragmentary top plan view of a first embodiment of the slip resistant shoe lace 10 made by weaving. The shoe lace 10 has a plurality of braided warp strands 12, and a woof strand 14 which holds the warp strands 12 together. One or more high-friction strands 16 are woven directly amongst the warp strands 12 during the weaving process. These high-friction strands 16 have a higher frictional coefficient than the warp strands 12 or woof strand 14. The warp strands 12 and woof strand 14 are preferably made from cotton, nylon, or polyester fibers, but any other conventional natural or synthetic fiber material can be used. Alternately, the woof strand 14 can be a high-friction strand, with or without additional high-friction warp strands 16 woven amongst the conventional warp strands 12.

Figure 2 is a cross section view showing of the lace of Figure 1 through view lines 2-2 and Figure 3 is a perspective view of the lace of Figure 1.

Figure 4 depicts a second, braided embodiment of a slip resistant lace 20. High-friction strands 22 are braided amongst conventional strands 24 having a normal frictional coefficient. Figure 5 is a cross-sectional view of Figure 4 showing a hollow lace where high-friction strands 22 are braided amongst conventional strands 24. In

addition to forming the shoe lace by weaving and braiding, the shoe lace can be formed by the process of knitting, such knitting taking place on conventional shoe lace knitting machines, with the exception that two or more high-friction strands will be substituted for two or more conventional strands. Notwithstanding which strand interlacing method is used to interweave the individual strands together, be it by weaving, braiding, or knitting, the resulting shoe lace will have a greater resistance to inadvertent untying at the bow than do conventional laces.

As with conventional strands 12 or 24, the high-friction strands 16 or 22 can start as strands of cotton, polyester, or nylon fibers. These strands are then coated or impregnated with a soft, high-friction rubber or plastic compound or a waxy substance to impart them with their slip resistant character.

The high-friction strands 16 or 22 can also be made by coating or impregnating untreated strands with resinous material and then curing the resinous material treated strands, if necessary, by conventional methods such as by air drying, heat lamp drying, ultraviolet light exposure and the like (not shown). Thereafter, these cured strands, which have a permanent tacky characteristic, are interlaced with tacky and conventional strands to achieve the desired tacky lace.

In addition to friction enhancing treatment by coating or impregnating with soft rubber, plastic, or resinous compounds, a strand 30 can be treated by cutting or pressing serrations or grooves 32 on the surface of the individual lace strands, to result in the shoe laces as shown in Figures 6 and 7, which will give laces woven therefrom enhanced frictional characteristics, as compared to laces constructed from untreated strands. The treated strands 30 can be prepared, in the case of strands made of synthetic materials such as polyester or nylon, by extrusion methods which will imbue the strands 30 with grooves 32, or by other known methods.

Alternately, the high-friction strands 16 or 22 can be manufactured largely or solely from rubber compounds, plastic compounds, or other materials having a high-friction, tacky, or rubbery, slip resistant texture which resists slipping and untying once the shoe laces 10 or 20 incorporating the high- friction strands 16 or 22 are tied together in a bow, due to the contact of the high-friction strands in the laces with conventional strands, and with other high-friction strands.

Shoe laces 10 or 20 incorporating high-friction strands made by either method have a higher frictional coefficient than conventional shoe laces, thereby minimizing inadvertent untying of the laces at the bow.

A major advantage the resulting laces 10 or 20 have over the prior art laces is that the high-friction strands 16 or 22 are interlaced directly amongst the conventional strands 12 and 24 during the manufacturing process to form a single thickness or layer of material, *i*.e. a single ply, rather than being looped in and out through the body of the lace as in several stages in the lace of U.S. Patent No. 2,477,151. This is best shown in Figures 3 and 4. The lace construction methods of this invention allow the appearance and shape of the lace to remain unaltered, e.g. round, semi-round, or rectangular in cross section, and does not increase the manufacturing cost appreciably.

The method by which the lace of Figures 1-3 is woven is shown schematically in Figure 8. During the process of manufacturing the high-friction laces 10, at least one, and preferably two or more high-friction strands 16 are woven directly amongst the warp strands 12 from spools 26 in the same manner that the warp strands 16 are fed from spools 26 on the weaving machine 28. Thus, the process of integrating the high-friction strands 16 does not introduce any additional steps in the weaving process.

The braided lace depicted in Figures 4 and 5 can be manufactured with standard shoe lace braiding machines, which are not shown. Knit versions of the slip resistant shoe lace can also be formed on a conventional knitting machine. The treated lace strands of Figures 6 and 7 can

be interwoven with other treated or untreated strands in the same manner.

The result of any of these approaches will result in a durable shoe lace having enhanced frictional qualities, which will prevent the shoe laces from inadvertently untying, yet having a similar appearance to conventional shoe laces.

It should be borne in mind that the drawings are not rendered in actual scale so that certain features of the invention can be brought out and depicted.

The drawings and the foregoing description are not intended to represent the only form of the invention in regard to the details of this construction and manner of operation. In fact, it will be evident to one skilled in the art that modifications and variations may be made without departing from the spirit and scope of the invention. Although specific terms have been employed, they are intended in a generic and descriptive sense only and not for the purpose of limitation, the scope of the invention being delineated in the following claims:

CLAIMS:

1. A slip resistant shoe lace having a plurality of interwoven strands of material and characterized by:

a plurality of untreated strands of material; and

at least one strand treated to have a coefficient of friction higher than that of said untreated strands, said untreated strands and said at least one high-friction treated strand being interwoven resulting in a single ply slip resistant lace.

2. The slip resistant shoe lace of claim 1, wherein said at least one high-friction strand comprises an untreated strand which has been impregnated with a friction enhancing substance.

3. The slip resistant shoe lace of claim 2, wherein said friction enhancing substance is selected from the group consisting of natural latex rubber, synthetic rubber, and plastics.

4. The slip resistant shoe lace of claim 1, wherein said at least one high-friction strand comprises an untreated strand which has been impregnated with a friction enhancing resinous substance.

5. The slip resistant shoe lace of claim 1, wherein said at least one high-friction strand does not extend beyond an outer perimeter of the slip resistant shoe lace.

6. The slip resistant shoe lace of claim 1, wherein said at least one high-friction strand is interweaving together with said untreated strands by weaving, braiding, or knitting.

7. The slip-resistent shoe lace of claim 1, wherein said untreated strands are made of conventional strand materials, such as cotton, nylon, and polyester.

8. The slip-resistent shoe lace of claim 1, having a woof strand and a plurality of warp strands, wherein said warp strands comprise untreated strands and said at least one treated strand.

9. The slip-resistent shoe lace of claim 1, having a woof strand and a plurality of warp strands, wherein said woof strand comprises said at least one treated strand, and said warp strands comprise untreated strands.

10. The slip-resistent shoe lace of claim 9, wherein said woof strand comprises an untreated strand and said warp strands of the shoe lace comprise said at least one treated strands and said untreated strands.

11. The slip-resistent shoe lace of claim 1, having a woof strand and a plurality of warp strands, wherein said wool strand comprises a treated strand and said warp strands comprises treated and untreated strands.

12. The slip-resistent shoe lace of claim 1, wherein said at least one high-friction strand has grooves or serrations formed on its outer surface to give it its enhanced frictional characteristics.

13. The slip resistant shoe lace of claim 12, wherein said grooves or serrations are cut or pressed into the outer surface of the strand.

14. The slip resistant shoe lace of claim 12, wherein said strand material is a synthetic material.

15. A method of manufacturing a slip resistant shoe lace comprising the steps of:

preparing an plurality of untreated strands;

preparing at least one strand having a higher frictional coefficient than said untreated strands; and

interweaving said untreated strands and said at least one high-friction strand together in such a manner that said at least one high-friction strand does not extend beyond an outer perimeter of the slip resistant shoe lace.

16. The method of manufacturing a slip resistant shoe lace of claim 15, wherein said step of obtaining at least one high-friction strand comprises the steps of;

obtaining untreated strands; and

treating said conventional strands with a friction enhancing substance.

17. The method of manufacturing a slip resistant shoe lace of claim 15, wherein said friction enhancing substances is selected from the group consisting of resinous substances, natural latex rubber, synthetic rubber, and soft plastic.

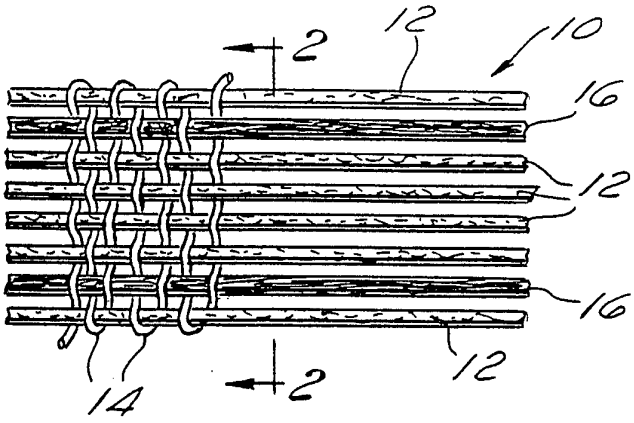

Fig. 1

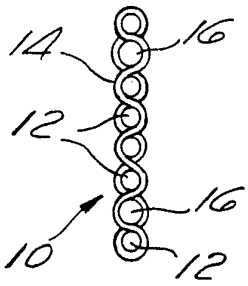

Fig. 2

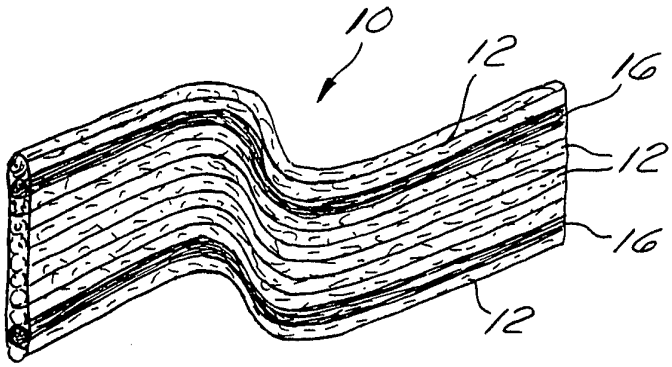

Fig. 3

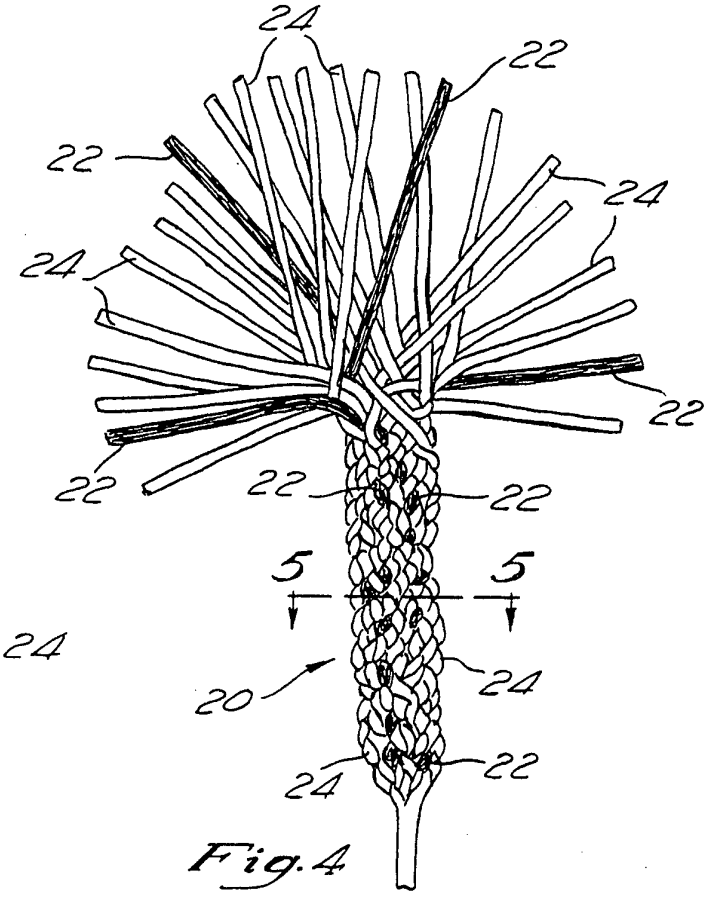

Fig. 4

Fig. 5

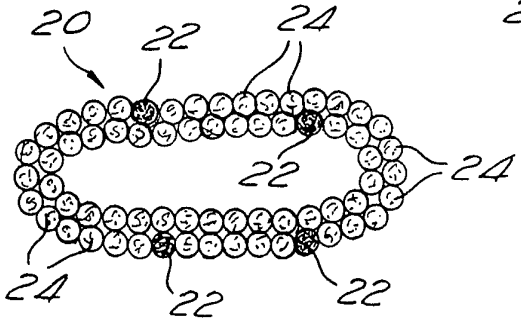

Fig. 6

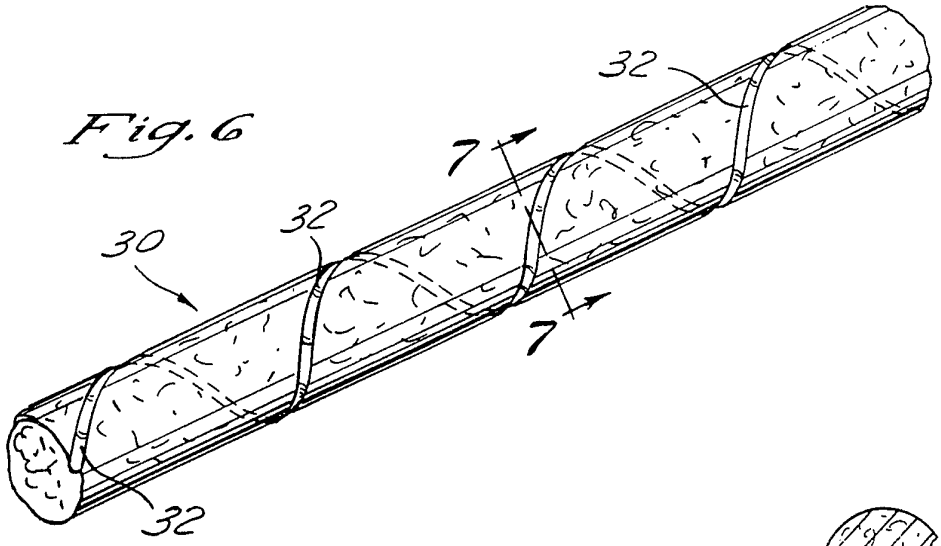

Fig. 7

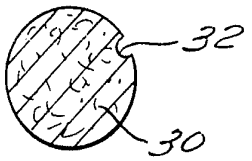

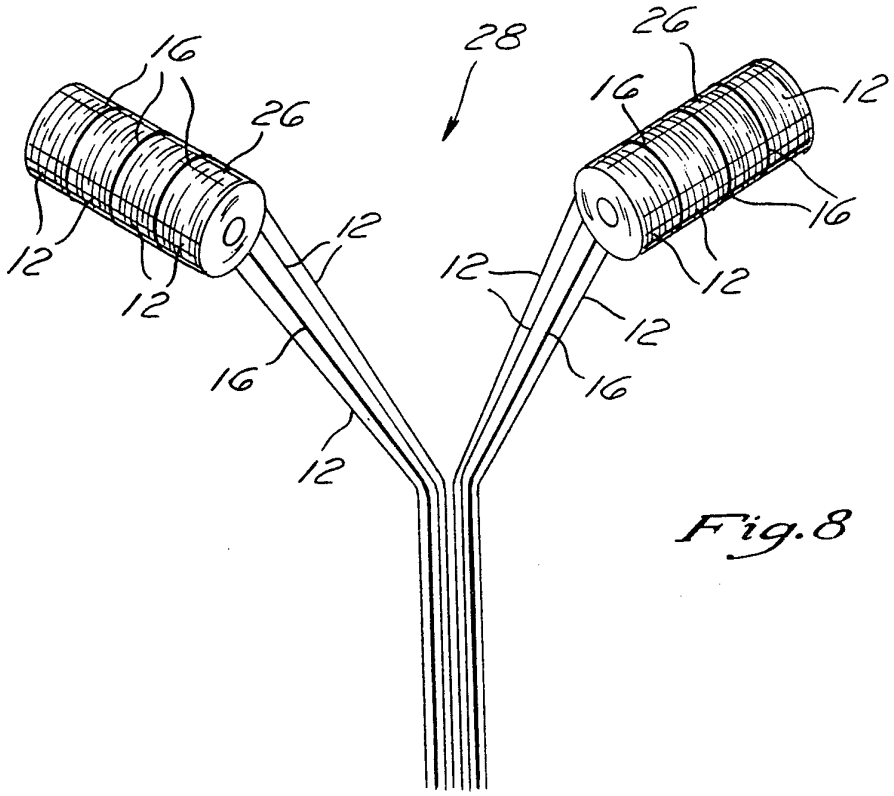

Fig. 8

INTERNATIONAL SEARCH REPORT

Int tional application No.
PCT/US93/10986

A. CLASSIFICATION OF SUBJECT MATTER

IPC(5) :A43C 9/00; D04C 1/02
US CL :024/712, 713, 715.4; 087/009
According to International Patent Classification (IPC) or to both national classification and IPC

B. FIELDS SEARCHED

Minimum documentation searched (classification system followed by classification symbols)

U.S. : 024/712, 713, 715.3, 715.4; 087/001, 005, 006, 007, 008, 009, 010, 011, 012, 013

Documentation searched other than minimum documentation to the extent that such documents are included in the fields searched

Electronic data base consulted during the international search (name of data base and, where practicable, search terms used)

C. DOCUMENTS CONSIDERED TO BE RELEVANT

Category*	Citation of document, with indication, where appropriate, of the relevant passages	Relevant to claim No.
X	US, A, 2,477,151 (Stapleton) 26 July 1949, col. 2.	1-7 and 15-17
A	US, A, 4,930,196 (Laurin) 05 June 1990, figure 2.	1
A	US, A, 3,059,518 (Nelson) 23 October 1962, figure 3.	1
A	US, A, 1,649,027 (Gunn) 15 November 1927, figure 1.	1
A	US, A, 1,066,759 (Schloss) 08 July 1913, figure 3.	1
A	US, A, 330,586 (Heisler) 17 November 1885, figure 4.	1

[X] Further documents are listed in the continuation of Box C. [ ] See patent family annex.

*	Special categories of cited documents:	"T"	later document published after the international filing date or priority date and not in conflict with the application but cited to understand the principle or theory underlying the invention
"A"	document defining the general state of the art which is not considered to be of particular relevance	"X"	document of particular relevance; the claimed invention cannot be considered novel or cannot be considered to involve an inventive step when the document is taken alone
"E"	earlier document published on or after the international filing date	"Y"	document of particular relevance; the claimed invention cannot be considered to involve an inventive step when the document is combined with one or more other such documents, such combination being obvious to a person skilled in the art
"L"	document which may throw doubts on priority claim(s) or which is cited to establish the publication date of another citation or other special reason (as specified)	"&"	document member of the same patent family
"O"	document referring to an oral disclosure, use, exhibition or other means		
"P"	document published prior to the international filing date but later than the priority date claimed		

Date of the actual completion of the international search	Date of mailing of the international search report
28 FEBRUARY 1994	11 MAR 1994
Name and mailing address of the ISA/US Commissioner of Patents and Trademarks Box PCT Washington, D.C. 20231 Facsimile No. (703) 305-3230	Authorized officer JOSEPH J. HAIL III Telephone No. (703) 308-2687

Form PCT/ISA/210 (second sheet)(July 1992)*

INTERNATIONAL SEARCH REPORT

In ational application No.
PCT/US93/10986

C (Continuation). DOCUMENTS CONSIDERED TO BE RELEVANT

Category*	Citation of document, with indication, where appropriate, of the relevant passages	Relevant to claim No.
A	GB, A, 500,077 (Van Noorden) 02 February 1939, figure 3.	1
A	JP, A, 52-11893 02 April 1977, figure 1.	1