(No Model.) 3 Sheets—Sheet 1.

G. LÜRMANN.

MEANS FOR ROLLING WIRE AND ROUND BARS.

No. 590,400. Patented Sept. 21, 1897.

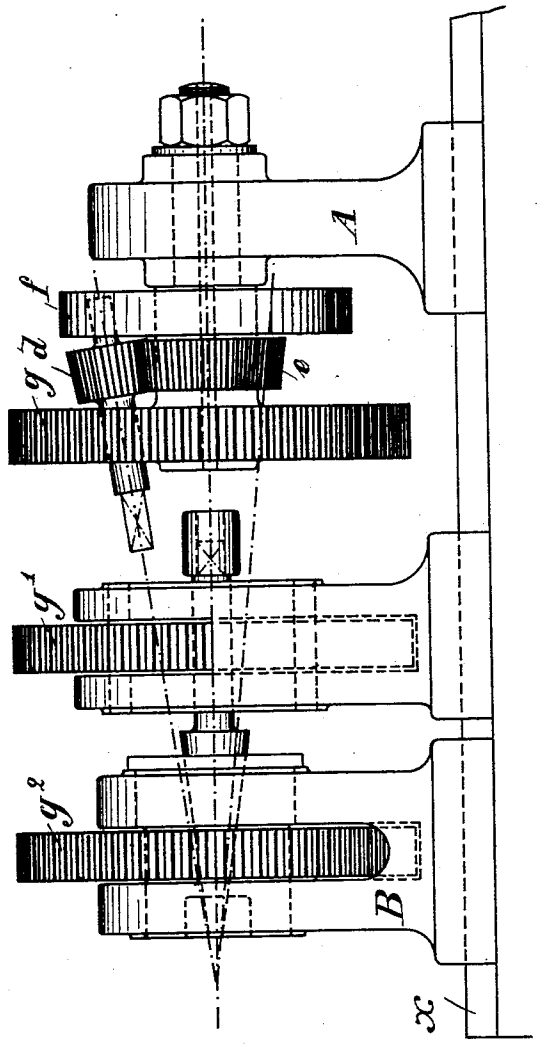

Fig. 1.

Witnesses
H. van Oldenneel
E. A. Scott

Inventor
Gustaf Lürmann
by [signature]
Attys

THE NORRIS PETERS CO., PHOTO-LITHO., WASHINGTON, D. C.

(No Model.) 3 Sheets—Sheet 2.

G. LÜRMANN.

MEANS FOR ROLLING WIRE AND ROUND BARS.

No. 590,400 Patented Sept. 21, 1897.

Fig. 2.

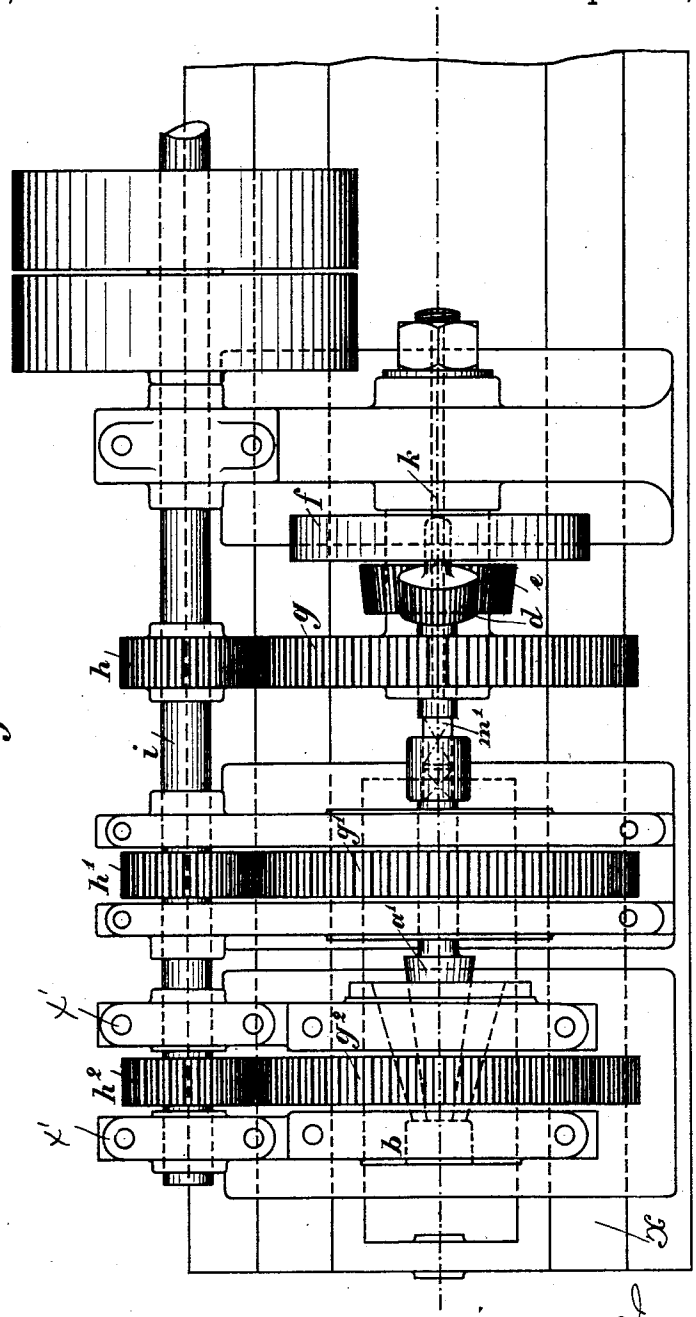

Witnesses
H. van Oldenneel
E. A. Scott

Inventor
Gustaf Lürmann
by Pennie & Pennie
Attys

THE NORRIS PETERS CO., PHOTO-LITHO., WASHINGTON, D. C.

(No Model.) 3 Sheets—Sheet 3.

G. LÜRMANN.

MEANS FOR ROLLING WIRE AND ROUND BARS.

No. 590,400. Patented Sept. 21, 1897.

Fig. 5.

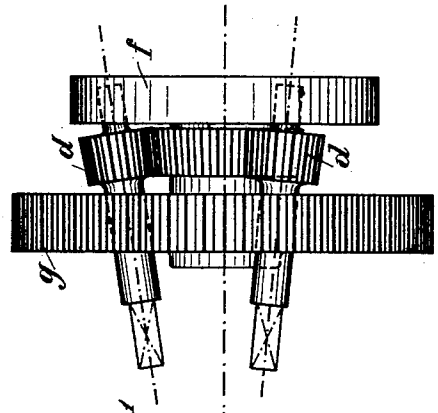

Fig. 4.

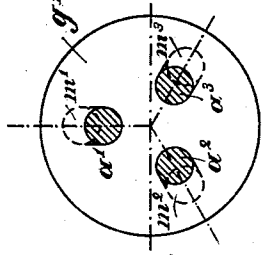

Fig. 3.

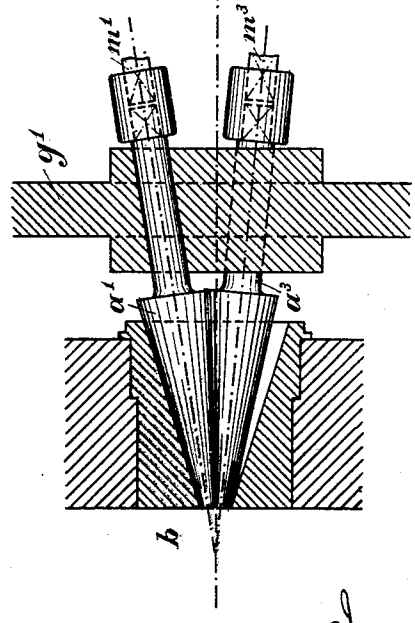

Witnesses
H. van Oldenneel
E. A. Scott

Inventor
Gustaf Lürmann
by Howson & Howson
Attys

THE NORRIS PETERS CO., PHOTO-LITHO., WASHINGTON, D. C.

UNITED STATES PATENT OFFICE.

GUSTAF LÜRMANN, OF GUNNEBO, SWEDEN.

MEANS FOR ROLLING WIRE AND ROUND BARS.

SPECIFICATION forming part of Letters Patent No. 590,400, dated September 21, 1897.

Application filed October 28, 1896. Serial No. 610,364. (No model.)

To all whom it may concern:

Be it known that I, GUSTAF LÜRMANN, a citizen of Sweden, residing at Gunnebo, Werkeback, Sweden, have invented certain new and useful Improvements in Means for Rolling Wire and Round Bars, of which the following is a specification.

The invention relates to a machine for rolling wire and round bars, and it consists in the special features hereinafter fully described, and pointed out in the claims.

Figure 1 is a side elevation, and Fig. 2 a plan of the same. Fig. 3 shows the arrangement of the different parts in section.

As may be seen in the drawings, the whole construction is very simple and consists principally in three conical rollers a' a^2 a^3, which are so arranged in relation to each other that their axes converge toward a common point. These rollers have bearings in a conically-bored bushing b, placed on a support in such a manner that the distance between the rollers may be varied by moving or adjusting said bushing.

The ends of the spindles m' m^2 m^3 bear in the disk f, which can rotate on the upright or standard A. These spindles receive their motion from the cog-wheel g, which is fixed on the said upright A and driven by means of the gearing i h. The spindles are journaled in this gear and also in the disk f, and as these parts move together the spindles are moved with said parts. The spindles are thus made to revolve around the axis of said cog-wheel g. Each of the spindles m' m^2 m^3 carries a conical cog-wheel d, which meshes with a stationary cog-wheel e, fixed on the upright A. When the spindles m' m^2 m^3 revolve around the axis of the cog-wheel g, the wheels d run around the stationary cog-wheel e and cause the spindles m' m^2 m^3 and the rollers a' a^2 a^3, which are coupled with the spindles, to rotate around their own axes simultaneously with their revolution around the axis of the wheel g. In order to facilitate said movement of the spindles m' m^2 m^3, caused by the cog-wheels h g, there may be used, especially if the spindles m' m^2 m^3 are long, an additional cog-wheel g', which, by means of the cog-wheel h', is driven from the gearing i. This wheel g' affords additional bearing for the spindles and preserves their arrangement relative to each other.

The bushing b, resting in the support and embracing the rollers a' a^2 a^3, may be displaced to the right or left for enabling the rolling of wire or bars of greater or smaller thickness, the rollers a' a^2 a^3 being brought to a greater or smaller distance from each other by displacing or adjusting the bushing, as stated. For this purpose the whole bracket B, carrying the bushing with its gearing, may be adjusted along the ways x of the base-plate. This bracket B, as shown in Fig. 2, has extensions X', forming bearings for the shaft i, and between these extensions the pinion h^2 is arranged to be slid along the shaft when the said bracket is moved.

In order to make the wear of the inner side of the bushing uniform and to diminish the friction during work, the bushing b itself is also rotated by means of the gearing g^2 h^2, so that always new parts of the inner surface of the bushing come into contact with the rollers. The bushing b, within which the rollers a' a^2 a^3 are placed, is mounted in such a manner that its axis lies in the prolongation of the axis of the gearing g e and the disk f. Through a hole k, bored in these wheels, the material is fed and is introduced centrally into the space between the rollers a' a^2 a^3. The rollers rotate on their own axes and simultaneously revolve around the axis of the wire. Thereby the wire is stretched and reduced in thickness without such disadvantageous alterations in its quality as are the result of using the well-known method of drawing wire hitherto employed. The fibrous texture of the material is not altered into a granular and short one, and thus the product resulting from this improved method is much superior in quality. Moreover, the material is stretched and reduced in thickness with less friction, so that power will be saved. The scales or crusts adherent to the wire are also easily released from it during the rolling of the rollers. Consequently the cleansing of the wire, hitherto necessary, is dispensed with, which is of great importance, especially in the employment of cast metal, which is very sensitive to acids.

The material is fed into the machine in the

usual manner by means of feeding-rolls, drawing-rolls, or the like, and the feeding may be facilitated by mounting the rollers a' a^2 a^3 in such a way that the small ends of the rollers during their movement around the material get the start of the thicker ends, where the wire is introduced, whereby the wire is spirally fed between the rollers toward the winding apparatus.

The improved rolling mechanism may be used for cold as well as for warm rolling of wire, &c.

I claim—

1. In a machine for rolling wire and round bars the combination of three conical, convergent rollers, a rotating disk, placed centrally to the space between said rollers, and provided with bearings for the spindles of the rollers, and a stationary cogged wheel, gearing with pinions on said spindles, substantially as and for the purpose set forth.

2. In a machine for rolling wire and round bars the combination with three conical, convergent rollers, a conically-bored rotating bushing, embracing said rollers and adjustable in longitudinal direction, a rotating disk, placed centrally to the space between the rollers and provided with bearings for the spindles of the rollers, and a stationary cogged wheel, gearing with pinions on said spindles, substantially as and for the purpose set forth.

3. In combination with the series of conical rollers, with means for making the same rotate about their own axes and to revolve about a common axis, a bushing having a conical bore to receive the said rollers and a support for said bushing, one of said parts *i. e.* the bushing or the rollers being movable toward and from the other part, substantially as described.

4. In combination the rollers with their spindles, the die *f* in which the spindles bear, the gear *g* carrying the spindles, means for rotating the gear *g*, the pinions on the spindles and the stationary gear engaging the pinions to rotate the rollers, substantially as described.

5. In combination the rollers with their spindles, the gear *g* carrying the spindles, means for rotating the spindles, the bushing through which the material passes, said bushing being located adjacent to the rollers to afford a bearing therefor, the gear *g* through which the spindles pass and means for rotating the gears *g* and *g'* in unison, substantially as described.

6. In combination the conical rollers, means for revolving the same about a common axis and for rotating them about their axes, a bushing receiving the ends of the rollers and means for rotating said bushing, substantially as described.

In testimony that I claim the foregoing as my invention I have signed my name in presence of two subscribing witnesses.

GUSTAF LÜRMANN.

Witnesses:
SOPHIE NAGEL,
W. H. MADDEN.