(12) UK Patent Application (19) GB (11) 2 092 004 A

(21) Application No 8102740
(22) Date of filing
29 Jan 1981
(43) Application published
11 Aug 1982
(51) INT CL³ A61N 1/36
1/08
(52) Domestic classification
A5R 85D9
(56) Documents cited
GB 2039742A
GB 1595108
GB 1594902
GB 1495391
GB 1421485
GB 1384638
GB 1376047
GB 1026869
GB 881837
GB 741525
GB 723213
GB 692667
EP 0009920A
EP 0001708A
(58) Field of search
A5R

(71) Applicant
Bio Medical Research
Limited
Shannon Industrial
Estate
Shannon Airport
County Clare
Ireland
(72) Inventors
Clive Royston Matthews
Michael Martin Quinlan
Maurice Gerard
O'Connor
(74) contined overleaf

(54) Muscle stimulating apparatus

(57) Muscle stimulating apparatus includes a source 1 of electrical signals which are sequentially applied by a time division multiplexer 9.15–18, to electrode pairs W, X, Y, Z adapted to be connected adjacent to the skin of a patient to stimulate the underlying muscles. The multiplexer prevents more than one electrode pair from being energized by the stimulating signals at any given time. A common return path 19 for the signals applied to each of the electrode pairs is provided with a current limiting device in the form of a constant current source 20 for enhancement of safety. A square wave signal with a rounded leading edge, produced by generator 4 and shaper 5, is applied to a mixer 3 to amplitude modulate the output of pulse generator 1, the output of mixer passing to the electrodes W, X, Y, Z via a buffer amplifier 6, transformer 8, potentiometer 11, 12, 13, 14, amplifier 21, 22, 23, 24, and opto-isolator switches 15, 16, 17, 18 which are sequentially operated by a counter 9 counting the output of pulse generator 1.

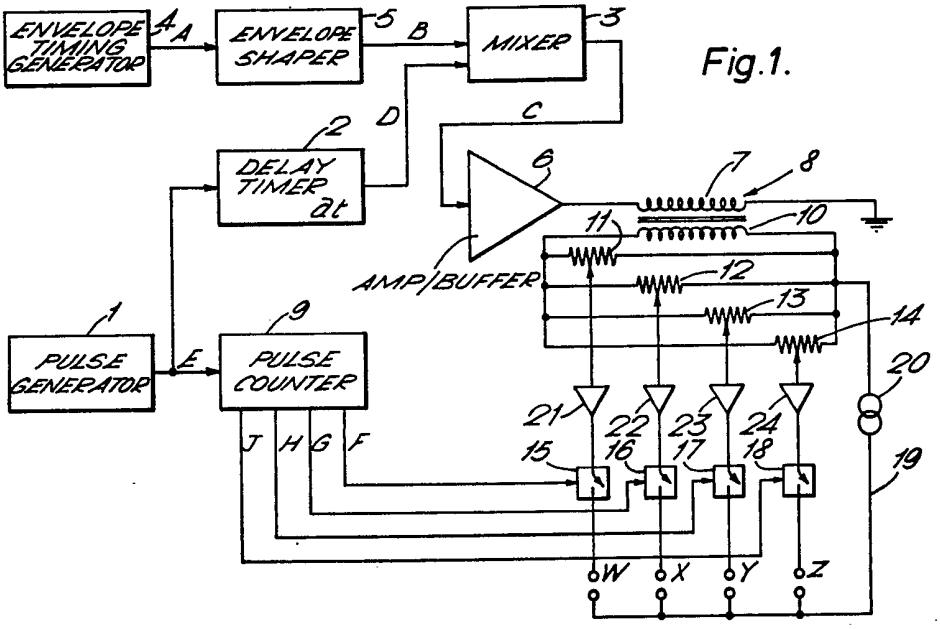

Fig.1.

GB 2 092 004 A

The drawings originally filed were informal and the print here reproduced is taken from a later filed formal copy.

(74) Agents
J A Kemp & Co
14 South Square
Gray's Inn
London WC1R 5EU

Fig.1.

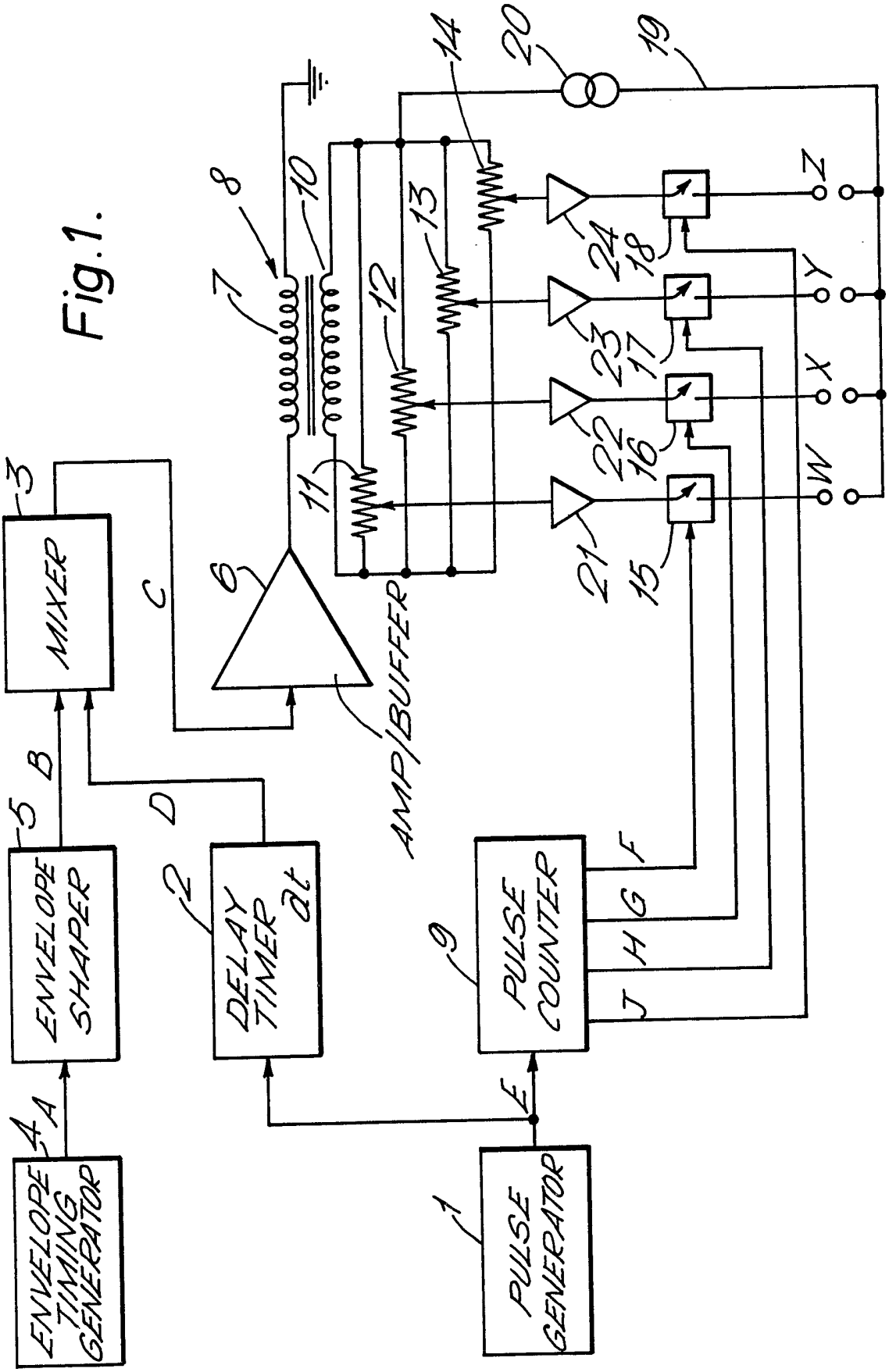
PULSE GENERATOR
1
ENVELOPE TIMING GENERATOR
4
A
ENVELOPE SHAPER
5
B
MIXER
3
C
DELAY TIMER Δt
2
D
PULSE COUNTER
9
E
F
G
H
J
AMP/BUFFER
6
7
8
10
11
12
13
14
20
19
24
23
22
21
18
17
16
15
Z
Y
X
W

Fig.2.

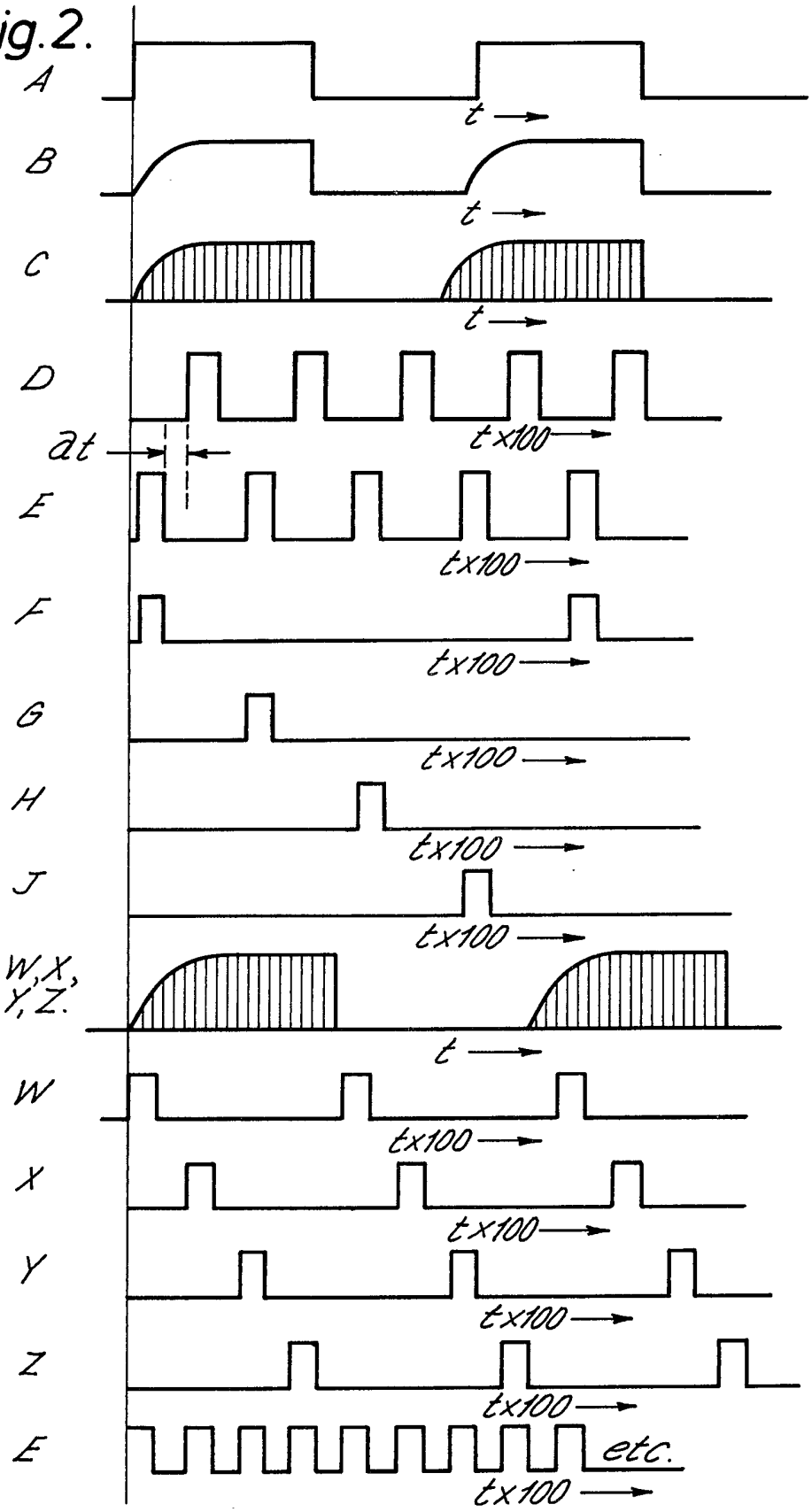
A
t
B
t
C
t
D
Δt
t x100
E
t x100
F
t x100
G
t x100
H
t x100
J
t x100
W, X, Y, Z.
t
W
t x100
X
t x100
Y
t x100
Z
t x100
E
etc.
t x100

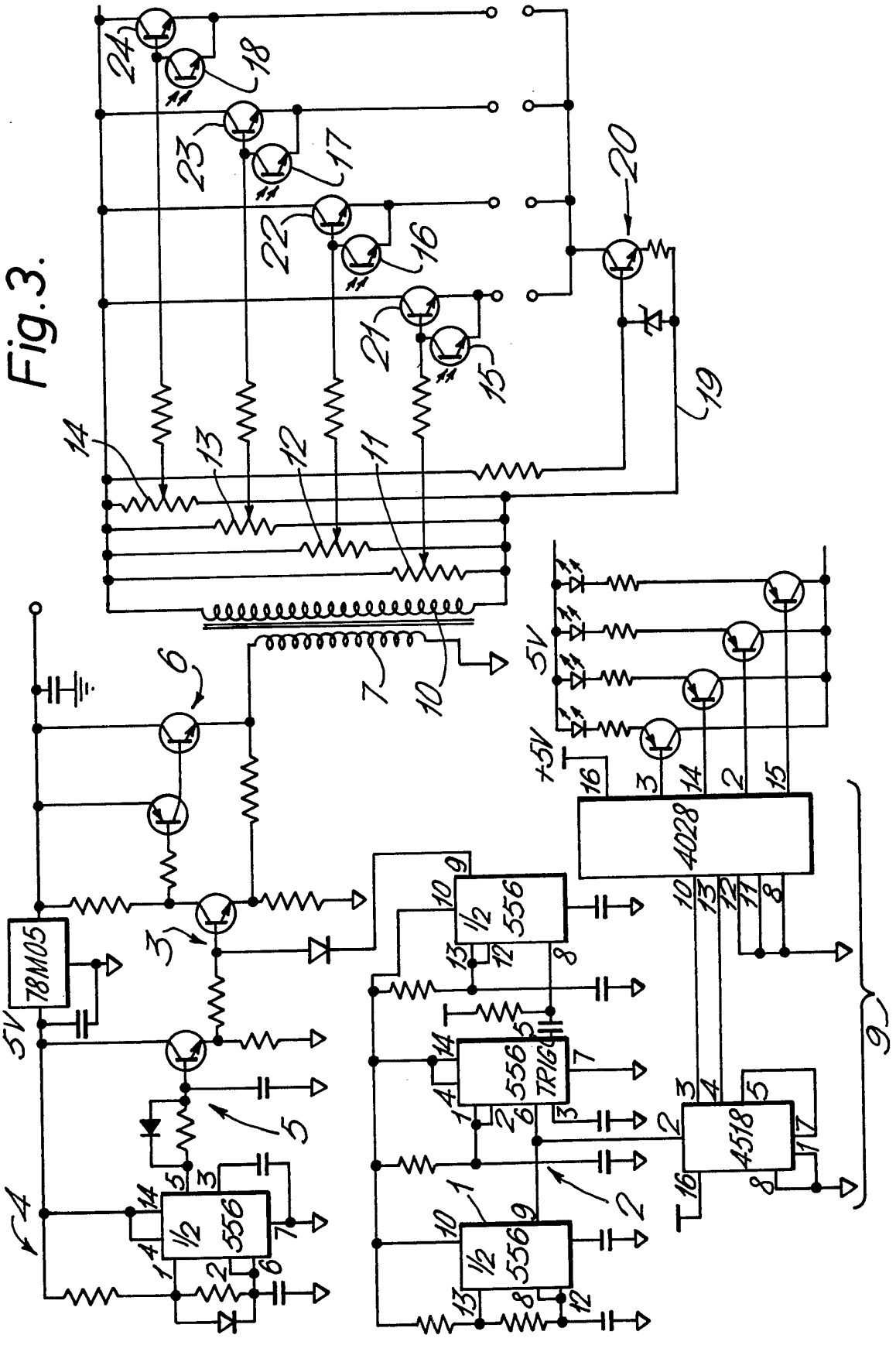
78M05
5V
+5V
4028
4518
556
TRIG
1/2
1
2
3
4
5
6
7
9
10
11
12
13
14
15
16
17
18
19
20
21
22
23
24

Fig. 3.

SPECIFICATION

Muscle stimulating apparatus

The present invention relates to a muscle stimulating apparatus.

Muscle stimulating apparatuses are well-known which comprise a plurality of electrodes which are applied to the skin and a pulse source which supplies to them a stream of pulses of suitable frequency, amplitude and waveform to stimulate muscles below the skin for the purposes of toning or exercising them. One such apparatus is the Slendertone (Registered Trade Mark).

According to the present invention we provide a muscle stimulating apparatus, a pulse generator for producing a stream of muscle-stimulating pulses and having at least two outputs for delivering respective muscle-stimulation signals, preferably trains of pulses, to associated electrodes, the pulse generator being arranged so that the muscle-stimulation signals applied to the respective electrodes do not overlap in time with one another. A convenient way of producing suitable trains of pulses is by time division multiplexing of a single pulse train.

One suitable form for the trains of pulses consists of bursts of pulses followed by spaces of lengths approximately equal to the bursts. Preferably the leading edge of the envelope of each burst is rounded so that the burst "surges" to its maximum value. One way of producing such a waveform with the present apparatus is to have a high frequency pulse generator which generates the pulses and to amplitude modulate it with the output of a lower frequency square waveform having a suitably rounded leading edge. The resulting modulated pulse train is applied via an amplifier/buffer to the primary of an isolating transformer. The output of the high frequency pulse generator is also connected to a pulse counter and "One of N" decoder, where N is the desired number of outputs of the apparatus. Associated with the secondary of the isolating transformer is multiplexing circuitry suitable for deriving N separate pulse streams, one for each set of electrodes. These pulse streams are derived using N electronic switches, preferably opto-isolators each controlled by individual ones of the outputs of the "One of N" decoder and are delivered to respective output terminals for connection to the body electrodes. In the circuitry associated with the transformer secondary, each set of electrodes may share a common return line and this can include a current limiting device such as a controlled current source to ensure that the current is kept to a safe level.

An apparatus as described above is described in more detail below with reference to the accompanying drawings. The illustrated apparatus has a number of advantages. Because of the time division multiplex method of production of the pulses, the pulses applied to each set of electrodes have a known maximum energy content which can be limited by the inclusion of the current limiting device. The apparatus is incapable of providing any voltages and currents beyond those supplied by the transformer and current limiting device, regardless of any accidental of deliberate cross connecting of any output electrode groups. Interaction between electrodes of different sets cannot occur because the pulse signals to each arrive at the electrodes at different times, therefore the effects of having signals present on all outputs simultaneously at differing amplitudes (which has caused interaction problems in the past) is eliminated.

The above and further features of the invention will be further described by way of non-limiting example with reference to the accompanying drawings, in which:—

Figure 1 is a functional block diagram of one embodiment of the invention;

Figure 2 shows the waveforms occurring at various points in the circuitry of Fig. 1; and

Figure 3 shows one particular form of the circuitry of Fig. 1.

The general construction and operation of the illustrated apparatus should be readily apparent from Figs. 1 and 2.

Briefly, the apparatus comprises a high frequency pulse generator one whose output is delivered by a delay circuit which provides a short delay to equalise delay times throughout the circuitry to a mixer 3 where the pulse stream D is amplitude modulated with a lower frequency pulse waveform B. This waveform B has an approximately 50 percent duty cycle and rounded positive-going edges and is derived from a lower frequency pulse generator 4 by an envelope shaper 5. The output from mixer 3 is applied to the input of an amplifier and buffer 6 which drives the primary 7 of an isolating output transformer 8 which is provided for safety purposes.

The output of pulse generator 1 is also applied to the input of a pulse counter 9 whose outputs F to J each go high in succession to produce 4 streams of pulses as indicated at F to J in Fig. 2 which go high in non-overlapping relation to one another and in synchronism with respective ones of 4 successive pulses of the pulse train E. The pulse counter may, for example, comprise a 4-bit recycling counter whose outputs are connected to a one of 4 decoder.

Connected in parallel across the secondary 10 of transformer 8 are for potentiometers 11 to 14 associated with respective output terminals W–Z to which, in use, may be connected one electrode of each of 4 sets of electrodes which may be applied to the body of the user using suitable body pads. The wipers of the potentiometers 11 to 14 are connected to the associated terminals W–Z via respective elec-

tronically operated switches 15 to 18 which are controlled by the individual ones of the outputs F to J of pulse counter 9. These electronic switches may be of the opto-isolator type e.g. having a light emitting diode driven by the associated output of pulse counter 9 and a photo-transistor constituting the controlled-conduction path. This, of course, serves to ensure that the circuitry connected to the body electrodes "floats" for safety purposes.

The outputs W–Z may share a common return line 19 to the secondary 10 of the transformer and this may include a current limiting device 20 such as a constant current source to keep the pulsed currents at a desired value.

In Fig. 2, each potentiometer 11–14 is shown connected to its associated output W–Z via an amplifier 21–24 and switch 15–18. This arrangement of the amplifiers and switches is intended to be schematic in the corresponding part of Fig. 3, the controlled element of each opto-isolator is a photo transistor 15–18 which when turned on shunts the collector to emitter circuit of an associated transistor 21–24 which corresponds to the amplifier in Fig. 2. These transistors 21–24 are suitably rated to handle the output voltage from transformer 8.

Fig. 3 shows one possible implementation of the circuitry of Fig 1 using "556" timers, CD4000 series logic circuitry and opto-isolators.

By way of example, suitable signal characteristics are as follows:—

Pulse duration (as in D.E.W,X,Y,Z) 200 microseconds;

Pulse interval (as in W,X,Y,Z) 2 milliseconds

Pulse interval (as in E,D) 5 millseconds for 4 outputs or

Pulse interval (as E,D) 2.5 milliseconds for 8 outputs;

Delay time (E/D) 200 microseconds;

Pulse train duration (as in A,B,C) 1 second

Pulse train interval (as in A,B,C) 1.5 second;

Maximum output voltage 110v into 1 kilohm load;

Maximum output current 120 milliamps.

Other values for the above parameters are, of course, possible although in the illustrated embodiment the pulses applied to the body electrodes are unipolar, the circuitry could be so arranged that the pulses are bipolar.

CLAIMS

1. Muscle stimulating apparatus comprising: a source of electrical signals; a plurality of electrodes adapted to be applied adjacent respective locations on the skin of a person to stimulate underlying muscles; and means for energizing said electrodes in response to said electrical signals, the arrangement being such that the signals are applied across the electrodes a pair at a time in a predetermined time sequence.

2. Apparatus according to claim 1 wherein said energizing means comprises a time division multiplexer having an input operatively connected to said source of electrical signals, and a plurality of outputs respectively operatively connected to said electrodes for sequentially energizing said electrodes one pair at a time.

3. Apparatus according to claim 2 wherein said multiplexer comprises a plurality of switches in one-to-one correspondence with said outputs, and means for sequentially actuating said switches in response to the occurrence of said electrical signals thereby causing said electrical signals to energize each electrode pair as the switch corresponding to its respective multiplexer output is actuated.

4. Apparatus according to claim 3 wherein each of said switches comprises a light sensitive switching element connected in circuit between said source of electrical signals and a respective one of said electrode pairs, and a light source which operatively connected to said source of electrical signals and energized in response to said electrical signals.

5. Apparatus according to any one of the preceding claims wherein the electrodes are arranged in pairs, there being a "line" electrode and a "return" electrode in each pair and the return electrodes of the pairs being electrically connected together.

6. Apparatus according to any one of the preceding claims and including current limiting means for limiting the current flowing through the user's body is below a predetermined magnitude.

7. Apparatus according to claims 5 and 6 wherein there is a common return circuit path connected between said source of electrical signals and the return electrodes and the current limiting means is connected in said common return circuit path for maintaining the current between the electrodes of each of said electrode pairs below a predetermined magnitude.

8. Apparatus according to any one of the preceding claims wherein said source of electrical signals comprises a pulse generator, and said energizing means comprises a pulse counter having an input connected to said pulse generator and a plurality of outputs, and a plurality of switches each of which is operatively connected between a respective one of the outputs of said pulse counter and one of said electrode pairs, each of said switches being actuated in response to the signal at its respective pulse counter output.

9. Muscle stimulating apparatus constructed and arranged to operate substantially as hereinbefore described with reference to and as illustrated in the accompanying drawings.

Printed for Her Majesty's Stationery Office
by Burgess & Son (Abingdon) Ltd.—1982.
Published at The Patent Office, 25 Southampton Buildings,
London, WC2A 1AY, from which copies may be obtained.