No. 713,125. Patented Nov. 11, 1902.

R. MARSH.

LAMP.

(Application filed Dec. 20, 1900.)

(No Model.)

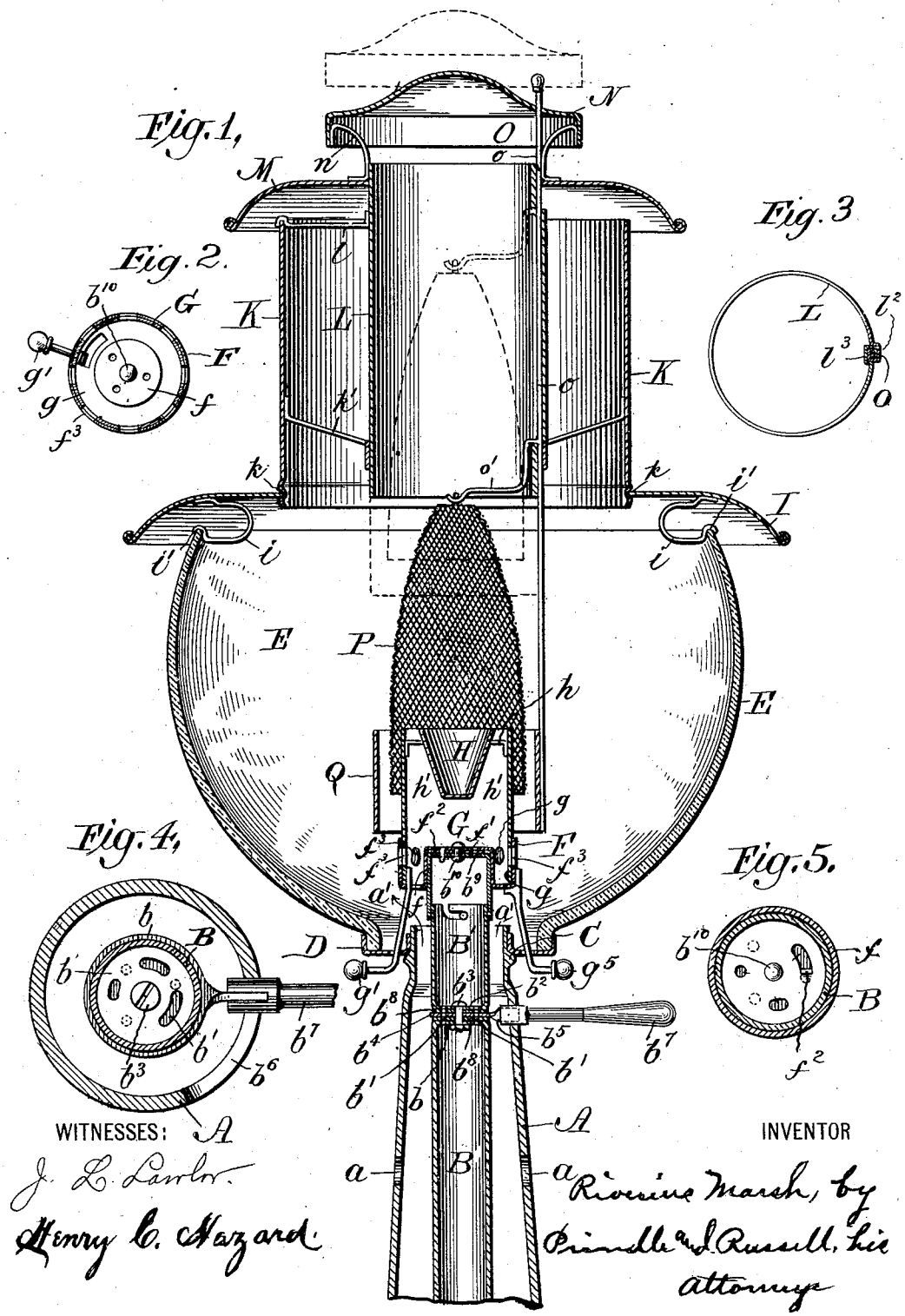

WITNESSES:

J. L. Lawlor.

Henry C. Hazard.

INVENTOR

Riverius Marsh, by Pindle and Russell, his attorneys

THE NORRIS PETERS CO., PHOTO-LITHO., WASHINGTON, D. C.

UNITED STATES PATENT OFFICE.

RIVERIUS MARSH, OF NEW BRUNSWICK, NEW JERSEY, ASSIGNOR TO GEORGE W. GLAENTZER, OF NEW YORK, N. Y.

LAMP.

SPECIFICATION forming part of Letters Patent No. 713,125, dated November 11, 1902.

Application filed December 20, 1900. Serial No. 40,518. (No model.)

To all whom it may concern:

Be it known that I, RIVERIUS MARSH, of New Brunswick, in the county of Middlesex, and in the State of New Jersey, have invented certain new and useful Improvements in Lamps; and I do hereby declare that the following is a full, clear, and exact description thereof, reference being had to the accompanying drawings, in which—

Figure 1 is a vertical sectional view of a lamp embodying my invention, the parts being in normal position. Fig. 2 is a horizontal sectional view of the cup and lower tube. Fig. 3 is a horizontal sectional view of the inner tube and mantle-holder. Fig. 4 is a plan view of the lower valve, and Fig. 5 is a sectional view from below of the thimble and cup.

Letters of like name and kind refer to like parts in each of the figures.

The object of my invention is to provide a gas-lamp of the incandescent type which shall be adapted, among other uses, to serve as a street-lamp, and which shall have, among other advantages, those of being simple in construction, capable of being lighted, regulated, and extinguished without opening the lamp, of protecting the refractory mantle from injury by knocks and jars during the normal use of the lamp, of having a part by which said mantle can be protected from wind, rain, or knocks during the cleaning of the lamp, of having a part which shall protect the mantle during transportation and while it is being placed in the lamp, of utilizing the lamp-post as a source from which to supply a uniform current of air for the lamp, such current being free from influence by the wind, and of having a simple gas-valve; and to such ends my invention consists in the lamp hereinafter specified.

In carrying my invention into practice I provide a hollow lamp-post A, having an air-opening a and having within the lamp-post a gas-pipe B. The upper end of the pipe B is closed by a top wall b, having slots b' and b' therein for the passage of gas. A short tube B′ above the pipe B is provided with a bottom wall b^2, having slots therein substantially like the slots b' and b'. A bolt b^3, preferably having a square shank, is passed through openings in the walls b and b^2 and secures the same together. Such bolt prevents the pipe B, tube B′, respectively, and the walls b and b^2, respectively, from turning with reference to each other. A valve is pivoted on the bolt b^3, and such valve consists of a disk b^4, having holes, a greater or less number of which are in communication with the slots b' and b', according to the position of the disk on its axis. A lug b^5 extends outward from the disk in position to be engaged through a slot b^6 in the lamp-post by a removable handle b^7. Removing the handle prevents tampering with the valve. In order to insure more perfect fitting of the valve to the surfaces between which it works, I prefer to place washers b^8 and b^8 above and below the valve-disk, such washers being slotted to correspond to the walls b and b^2. The upper end of the tube B′ is closed by a wall b^9, having slots of graduated sizes. A cup F, having a central projection f within it, is secured on the top of the tube B′, as by a rivet b^{10}. The upper wall f' of the projection f is perforated with a series of holes, a greater or less number of which are in communication with the slots in the wall b^9, according to the position of the cup F on the rivet. A tongue f^2 is bent down from the wall f' to engage the longest slot in the wall b^9 to readily determine the positions, respectively, permitting the passage of the maximum amount of gas and closing the pipe. To permit assembling of the parts, the tube B′ is preferably made in two sections, that are united by a bayonet-joint. The cup F is provided with a series of apertures f^3 and f^3 in its vertical sides. A vertical tube G rests within and closely fits the cup F, and such tube has apertures g and g, which correspond to the apertures f^3 and f^3. The spaces between the apertures are at least as great as the horizontal diameters of the apertures, so that by turning the tube G the apertures f^3 and f^3 can be completely closed or can be opened to any desired degree. A handle g' is secured, preferably, to the inside of the tube G and extends through preferably arc-shaped slots in the cup F and globe-holder D to a position outside the lamp, where it can readily be reached by the hand. An inverted cone H is supported within the tube G and at the upper end thereof by arms h

and h, which connect such parts. The cone is smaller in diameter at its upper end than the tube G, so that an annular space h' is formed between the cone and tube. A bead C on the lamp-post supports a globe-holder D, on which latter preferably rests a globe E or other form of transparent protector. The reflector I is supported on the upper edge of the globe E by spring-arms i and i, which are secured to such reflector and which have, preferably, U-shaped bends i' and i', that fit over the edge of the globe E and prevent lateral motion of the reflector relative to the globe. An outer tube K is supported within a central aperture in the reflector I by means of a bead k, formed on such tube, and said tube and reflector can, if desired, be permanently fastened together. Within the outer tube K an inner tube L is supported by springs l and l, attached to such tube and having, preferably, U-shaped bends which fit over and rest upon the upper edge of the tube K. In the lower portion of the tube K are secured arms k' and k', which are preferably formed of spring material, and such arms are adapted to bear against and hold the inner tube in a central position. A preferably saucer-shape protector M is secured to the upper portion of the tube L, and such protector extends outside of the outer tube and preferably below the level of its upper edge. The upper end of the inner tube is covered by a protector N, which is sustained above such tube by arms n and n and which has a vertical apron that descends nearly to the level of the tube's upper edge.

The arms l and l can, if desired, be attached to the protector M and the tube L removably supported in such protector, as by having a bead formed on the tube and engaging the upper surface of the protector. Instead of a single inner tube a number of concentric inner tubes of different diameters can be secured within the outer tube.

The tube L is preferably formed by bending a sheet of metal about an axis and into cylindrical form and uniting the meeting edges by a seam. The seam I prefer is formed by bending a narrow strip l^2 along one edge of the sheet toward one face of the sheet, bending a similar strip l^3 along the opposite edge of the sheet toward the opposite edge of the sheet, as indicated in Fig. 3, and then when the sheet is bent into cylindrical form engaging the hooks thus formed and pressing them together to fasten the seam. Before pressing the strips l^2 and l^3 together a mantle-holder O, consisting of a long, preferably flattened, strip o of metal, is inserted in the upper portion of the seam and emerges into the tube through a horizontal slit. When the strips l^2 and l^3 are pressed together on each side of the strip o, a guideway is formed which securely but adjustably supports the mantle-holder O in the tube L. The mantle-holder preferably extends through a hole in the protector N and is provided with a handle at its upper end. The mantle P is supported by an arm o', formed on or attached to the strip o in any desired manner. Such arm extends to the axis of the tube L, where it is provided with a hook to engage and support the mantle. The strip o preferably extends down beside the mantle to the lower portion thereof, where it supports a tube Q, that surrounds the lower portion of the mantle. The tube Q is preferably attached to the strip o in the same manner as such strip is attached to the tube L. The tubes K and G are also preferably formed in the same manner as the tube L. I have found the forming of tubes for lamps by seaming together the edges thereof to be a very efficient and satisfactory way of forming such tubes and to be much cheaper than forming such tubes by drawing.

In the operation of my lamp, the parts being in the positions shown in Fig. 1, when it is desired to light the lamp the disk b^4 or the cup F, or both, as desired, are turned and the gas passes through the slots and perforations and enters within the tube G. In such tube the gas commingles with air that enters through the apertures f^3 and f^3, and the mixture, owing to the impetus of the gas, rushes upward into the tube G and passes up through the inner tube and out under the protector N. A torch applied near the outside of the protector lights the mixture, and the flame easily and with little violence of explosion travels back to the burner. When the mixture strikes the cone H, it is deflected obliquely outward, so that it issues from the annular space between such cone and the tube G in a conical sheet and strikes the mantle at its lower portion. The mixture of air and gas then ascends within the mantle, so that all portions of the latter are well heated. I have found in practice that the cone greatly adds to the efficiency of the burner. The amount of air admitted to the burner is regulated from without the lamp by the handle g', by which the tube G is turned to open or close the apertures f^3 and f^3. The air reaches the interior of the globe by passing into the lamp-post through the opening a and thence through the lamp-post and out through its upper end. The air thus enters the burner in such a manner that neither the direction nor the intensity of the wind can appreciably affect it.

When it is desired to clean the lamp, the mantle-holder is drawn upward in the tube L by raising its handle, such action carrying the mantle up within said tube and carrying the tube Q up against the bottom of the tube L. The said tubes having the mantle within them can then be lifted out of the outer tube, and the mantle will be protected from injury of any kind during the cleaning of the lamp. This is of especial advantage during stormy weather. If desired, the mantle can be placed within the tubes L and Q in a protected location and can be transported to the lamp therein, thus avoiding all danger of exposing the

mantle. When the mantle is to be placed in the lamp, the tube L is seated on the tube K and the handle of the mantle-holder is depressed, thus carrying the mantle and tube Q to their normal positions. The springs *i* and *i* and *l* and *l* take up all shocks which might reach the mantle, and the life of the latter is thus increased.

It will be observed that my lamp can be lighted, extinguished, and regulated without opening the lamp, that in all positions the mantle is protected from direct or indirect injury, and that the flame is well protected from the wind and rain.

Changes can be made in the above-described construction which are within the scope of my invention. Either the disk b^4 and its coacting parts can be omitted, or the valve construction between the wall b^9 and cup F can be omitted, if desired.

Having thus described my invention, what I claim is—

1. In a lamp having a mantle, the combination with a tube above the mantle, of means for drawing the mantle into such tube, substantially as and for the purpose described.

2. In a lamp having a mantle, the combination with a removable tube above the mantle, of means of drawing the mantle into such tube, substantially as and for the purpose described.

3. In a lamp having a mantle, the combination with a normally stationary tube above the mantle, of means for drawing the mantle into such tube, substantially as and for the purpose described.

4. In a lamp having a mantle, the combination with a tube above the mantle, of means attached to such tube for supporting said mantle, and springs supporting such tube, substantially as and for the purpose described.

5. In a lamp having a mantle, the combination with a tube above the mantle, of a tube surrounding the mantle, means for drawing said mantle into such upper tube, and for raising said lower tube, substantially as and for the purpose described.

6. In a lamp having a mantle, the combination with a tube above the mantle, of a tube surrounding the mantle, means for drawing said mantle into such upper tube, and for raising said lower tube, such means extending outside of the lamp, substantially as and for the purpose described.

7. In a lamp having a mantle, the combination with a tube above the mantle, of a tube surrounding the mantle, means attached to said upper tube and supporting such mantle and lower tube, said supporting means being vertically adjustable on such upper tube, substantially as and for the purpose described.

8. In a lamp having a mantle, the combination with a tube above the mantle, of a tube surrounding the mantle, and a strip threaded through openings in the upper tube and frictionally held therein, such strip supporting the mantle and lower tube, substantially as and for the purpose described.

9. In a lamp having a mantle, the combination of a tube above the mantle, and a mantle-holder comprising a strip of material, said tube consisting of a sheet of material having opposite edges that are oppositely bent and are hooked and compressed together, said mantle-holder being adjustably engaged with said tube within the seam thus formed, substantially as described.

10. In a lamp having a mantle, a tube consisting of a sheet of material that is bent into tubular form and which has a portion along one of its edges bent outward against the face of the sheet, a portion of the sheet along the opposite edge thereof being bent outward, forward and under in engagement with said first-mentioned portion and forming therewith a seam and also a socket for the reception of a mantle-holder, substantially as and for the purpose described.

11. In a lamp having a mantle, the combination with a globe, of a reflector yieldingly supported on such globe, a tube yieldingly supported on said reflector and above the mantle, and means for supporting the mantle from such tube, substantially as and for the purpose described.

12. In a lamp having a mantle, the combination with a globe, of a reflector yieldingly supported on such globe, a tube supported on said reflector, an inner tube yieldingly supported within the first-mentioned tube, and means attached to such inner tube for supporting the mantle, substantially as and for the purpose described.

13. In a lamp having a mantle, the combination with a globe, of a reflector yieldingly supported on such globe, a tube secured to said reflector, an inner tube yieldingly supported within such first-mentioned tube, a protector secured to said inner tube and extending over and above such outer tube, a second protector extending over and above said inner tube, and means for supporting the mantle within such inner tube, substantially as and for the purpose described.

14. In a lamp, the combination with a burner, of a mantle, a tube surrounding the lower portion of the mantle, inner and outer tubes above the mantle and having separate exits, and a globe surrounding the burner and mantle, substantially as and for the purpose described.

15. In a lamp, a part having a central cup-shape projection, the end wall of such projection having perforations therein, and the wall of said projection being threaded to engage a gas-pipe, and such part having a vertical wall around its outer edge, substantially as and for the purpose described.

16. In a lamp having a mantle, a part having a central projection for securing such part to a gas-pipe and having a vertical wall having openings therein, in combination with

a tube fitting within such wall and having openings corresponding to said first-mentioned openings, whereby said tube is supported by such part and the admission of air through said openings can be controlled by the relative movement of said parts, substantially as and for the purpose described.

17. In a lamp having a mantle, the combination with a part having a central projection for securing such part to a gas-pipe and having a vertical wall having openings therein, of a tube fitting within such wall and having openings corresponding to said first-mentioned openings, and a handle for turning such tube, said handle being secured to such tube and projecting through a slot in said part, substantially as and for the purpose described.

18. In a street-lamp, the combination with a burner having a transparent inclosure therefor, of a hollow lamp-post having the upper portion of its interior connected with such inclosure and having a contracted opening in its walls for the admission of air, the connection between said transparent inclosure and said lamp-post being such as to practically prevent the entrance of wind into such inclosure through such connection, substantially as and for the purpose described.

19. In a lamp, the combination with a part having a central cup-shape projection, the end wall of such projection having perforations therein and the wall thereof being adapted to engage a gas-pipe, and such part having a vertical apertured wall around its outer edge, of a tube fitting within and apertured to correspond to said last-mentioned wall, and a cone supported within and nearly filling the upper portion of such tube, substantially as and for the purpose described.

20. In a lamp, the combination with a gas-tube having a slotted wall in its end, of a cup having a central projection in which such tube is received, said projection having holes which coact with such slots, the outer wall of such cup being vertical and having apertures therein, a tube supported by and fitting within said outer wall and having apertures coacting with such first-mentioned apertures, and a burner supported by said tube, substantially as and for the purpose described.

21. In a lamp having a mantle, the combination with a globe, of an outer tube having spring-arms resting on such globe, an inner tube having spring-arms resting on said outer tube, a mantle, and mean for supporting such mantle from said inner tube, substantially as and for the purpose described.

22. In a lamp, the combination with a tube having a diaphragm extending across the same, of a shell having a diaphragm adjacent said first-mentioned diaphragm, said diaphragms having corresponding slots, and a disk fitting closely between such diaphragms and having apertures that are adapted to be brought into coincidence with such slots, substantially as and for the purpose described.

23. In a lamp, the combination with a tube having a diaphragm extending across the same, of a shell having a diaphragm adjacent said first-mentioned diaphragm, a disk between such diaphragms, and washers packing the space between said disk and such diaphragms, said diaphragms and washers having corresponding slots, and such disk having apertures that are adapted to be brought into coincidence with said slots, substantially as and for the purpose described.

In testimony that I claim the foregoing I have hereunto set my hand this 28th day of November, 1900.

RIVERIUS MARSH.

Witnesses:
JULIA D. MARSH,
CAROLINE H. MARSH.