May 4, 1965 J. P. GITS 3,181,321

KEY HOLDERS

Filed Jan. 21, 1963

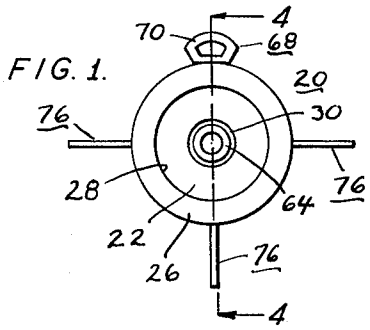

FIG. 1.

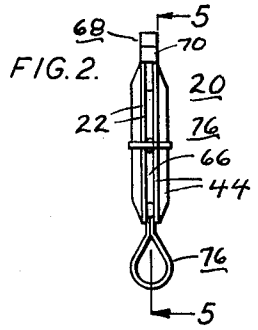

FIG. 2.

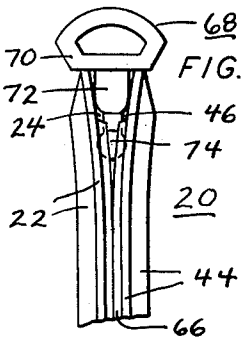

FIG. 3.

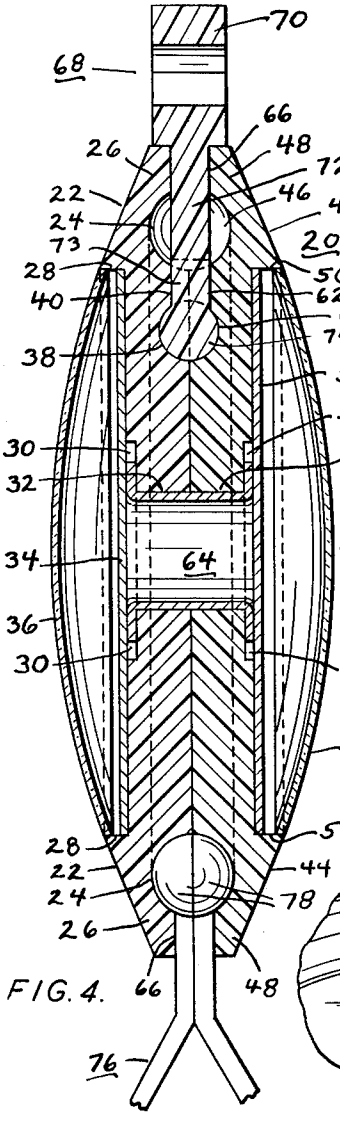

FIG. 4.



FIG. 7.

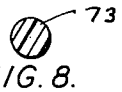

FIG. 8.

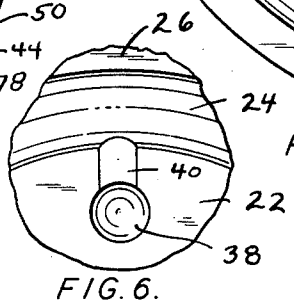

FIG. 6.

FIG. 5.

INVENTOR.
JULES P. GITS
BY
Ray Eilers
ATTORNEY.

United States Patent Office 3,181,321 Patented May 4, 1965

3,181,321

KEY HOLDERS

Jules P. Gits, River Forest, Ill., assignor to John R. Gits, River Forest, Ill.

Filed Jan. 21, 1963, Ser. No. 252,654
12 Claims. (Cl. 70—456)

This invention relates to improvements in key holders. It is therefore, an object of the present invention to provide an improved key holder.

To be satisfactory, a key holder should be able to hold keys so those keys could be rotated freely relative to that key holder, so those keys could be held against accidental separation from that key holder, and so any one of those keys could be singled out for quick and easy separation from that key holder. While key holders have been provided which permitted keys held thereby to rotate freely, those key holders either could not prevent accidental separation of those keys or could not permit any one of those keys to be singled out for quick and easy separation. It would be desirable to provide a key holder which could permit keys held thereby to rotate freely, which could prevent accidental separation of the keys, and which could enable any one of those keys to be singled out for quick and easy separation. The present invention provides such a key holder; and it is, therefore, an object of the present invention to provide a key holder which can permit keys held thereby to rotate freely, which can prevent accidental separation of the keys, and which can enable any one of those keys to be singled out for quick and easy separation.

The key holder provided by the present invention has a groove which can accommodate portions of key-holding clips. That key holder also has an actuator which can widen selected sections of that groove to facilitate ready insertion of the said portions of the key-holding clips into, and to permit ready removal of the said portions of those key-holding clips from, those sections of that groove. When that actuator is in its normal position, the groove of the key holder will hold the said portions of the key-holding clips against separation from that key holder. However, whenever the key-holding clips are to be separated from the key holder, the actuator can be used to widen a selected portion of the groove in the key holder, and thereby facilitate quick and easy separation of the key-holding clips from the key holder. It is, therefore, an object of the present invention to provide a key holder which has a groove that normally confines and retains portions of key-holding clips, and which has an actuator that can be used to widen selected sections of that groove to facilitate quick and easy separation of the key-holding clips from that key holder.

The key holder provided by the present invention is generally flat, and hence it will fit nicely within a user's pocket or purse. The actuator for that key holder will normally lie so it is parallel to the plane of that key holder; and this is desirable because it will not keep the key holder from fitting nicely within a user's pocket or purse, and because it will keep the forces that normally act upon that actuator from causing that actuator to widen the groove in the key holder. It is, therefore, an object of the present invention to provide a generally flat key holder with an actuator that normally lies so it is parallel to the plane of that key holder.

Other and further objects and advantages of the present invention should become apparent from an examination of the drawing and accompanying description.

In the drawing and accompanying description a preferred embodiment of the present invention is shown and described but it is to be understood that the drawing and accompanying description are for the purpose of illustration only and do not limit the invention and that the invention will be defined by the appended claims.

In the drawing, FIG. 1 is a front elevational view of one preferred form of key holder that is made in accordance with the principles and teachings of the present invention,

FIG. 2 is an elevational view of the right-hand end of the key holder of FIG. 1,

FIG. 3 is an end elevational view, on a larger scale, of part of the key holder of FIG. 1 and it shows the actuator of that key holder in the position which it assumes in widening a section of the groove of that key holder,

FIG. 4 is a sectional view, on a much larger scale, through the key holder of FIG. 1 after that key holder has been equipped with indicia-bearing inserts and with overlying windows, and it is taken along the plane indicated by the line 4—4 in FIG. 1,

FIG. 5 is a sectional view, on the scale of FIG. 4, through the key holder of FIG. 1, and it is taken along the plane indicated by the line 5—5 in FIG. 2,

FIG. 6 is a rear elevational view, on the scale of FIG. 4, of that part of the key holder of FIG. 1 which is indicated by the circular line 6 in FIG. 5,

FIG. 7 is a sectional view, on the scale of FIG. 4, through the actuator for the key holder of FIG. 1, and it is taken along the plane indicated by the line 7—7 in FIG. 5, and

FIG. 8 is another sectional view, on the scale of FIG. 4, through the actuator of the key holder of FIG. 1, and it is taken along the plane indicated by the line 8—8 in FIG. 5.

Referring to the drawing in detail, the numeral 20 denotes a preferred form of key holder that is made in accordance with the principles and teachings of the present invention. The numeral 22 denotes a circular, disc-like member that has an annular groove 24 of semi-circular cross section in the inner face thereof; and, as indicated particularly by FIGS. 4 and 5, the groove 24 is adjacent the periphery of the member 22. The numeral 26 denotes a reduced thickness periphery for the member 22; and that reduced-thickness periphery extends radially outwardly from the outer periphery of the groove 24 to the periphery of the member 22. The inner face of the reduced-thickness periphery 26 is plane and is parallel to the plane defined by the inner face of the member 22. A large diameter, cylindrical recess 28 is formed in the outer face of the member 22; and that recess is shallow. A smaller diameter, cylindrical recess 30 extends inwardly from the inner face of the recess 28; and the recess 30 is even shallower than the recess 28. The recesses 28 and 30 are concentric with the member 22, with the groove 24, with each other, and with a small diameter, central opening 32 which extends through the member 22.

The recess 28 is intended to accommodate a circular insert 34 which can be made of paper, metal, plastic, wood, or the like. That insert will preferably have a design or indicia thereon; and that design or indicia can be decorative or can be an advertisement. The recess 28 is also intended to accommodate the edge of a generally spherical window 36 of transparent material. The edge of that window will fit tightly against the edge of the recess 28, and thus will keep water, dirt, and other foreign material from entering that recess. While the insert 34 and the window 36 are desirable, they are not necessary; and the member 22 can be used without either of them.

The member 22 has a semi-spherical recess 38 formed in the inner face thereof; and that recess is disposed inwardly of the inner periphery of the groove 24, as shown particularly by FIGS. 4 and 6. A short, semi-cylindrical recess 40 is formed in the inner face of the member 22; and that recess extends between the semi-spherical recess 38 and the groove 24. As shown particularly by FIG. 6, the semi-cylindrical recess 40 is radially-directed.

The numeral 44 denotes a circular, disc-like member which is identical with the member 22. Specifically, the member 44 has an annular groove 46 of semi-circular cross section in the inner face thereof; and that groove is adjacent the periphery of the member 44, as shown particularly by FIG. 4. Also, that groove is in register with the groove 24 in the member 22. The numeral 48 denotes a reduced-thickness periphery for the member 44; and that reduced-thickness periphery extends radially outwardly, from the outer periphery of the groove 46, to the periphery of the member 44. The inner face of the reduced-thickness periphery 48 is plane and is parallel to the plane defined by the inner face of the member 44. A large diameter, cylindrical recess 50 is formed in the outer face of the member 44; and that recess is shallow. A smaller diameter, cylindrical recess 52 extends inwardly from the inner face of the recess 50; and the recess 52 is even shallower than the recess 50. The recesses 50 and 52 are concentric with the member 44, with the groove 46, with each other, and with a small diameter, central opening 54 which extends through the member 44.

The recess 50 is intended to accommodate a circular insert 56 which can be made of paper, metal, plastic, wood, or the like. That insert will preferably have a design or indicia thereon; and that design or indicia can be decorative or can be an advertisement. The recess 50 also is intended to accommodate the edge of a generally spherical window 58 of transparent material. The edge of that window will fit tightly against the edge of the recess 50, and thus will keep water, dirt and other foreign material from entering that recess. While the insert 56 and the window 58 are desirable, they are not necessary; and the member 44 can be used without either of them.

A semi-spherical recess 60 is formed in the inner face of the member 44; and that recess is in register with the semi-spherical recess 38 in the member 22. The semi-spherical recesses 38 and 60 coact together to define a spherical recess within the key holder 20; and that spherical recess is disposed inwardly of the annular groove formed by the grooves 24 and 46 in the member 22 and 44. A short, semi-cylindrical recess 62 is formed in the inner face of the member 44; and that recess extends between the semi-spherical recess 60 and the groove 46; and that semi-cylindrical recess is radially-directed. The semi-cylindrical recess 62 is in register with the semi-cylindrical recess 40 in the member 22; and those two recesses coact together to define a cylindrical recess within the key holder 20.

The members 22 and 44 will preferably be made from a waterproof, corrosion-resistant, light-weight, resilient material. Thermoplastic materials are ideally suited for use in making the members 22 and 44.

The numeral 64 denotes an eyelet which is disposed within the central openings 32 and 54, respectively, of the members 22 and 44. The opposite ends of that eyelet extend radially outwardly and lie in the shallow recesses 30 and 52 in those members; and hence that eyelet will fixedly and permanently hold the central areas of the inner faces of the members 22 and 44 in intimate, abutting engagement. However, because the members 22 and 44 are resilient, the peripheries of those members can be bent away from each other. This means that although the confronting faces of the reduced-thickness peripheries 26 and 48 of the members 22 and 44 will normally define a narrow annular recess 66, that recess can have selected sections thereof widened.

The numeral 68 generally denotes an actuator for the key holder 20; and that actuator has a broad finger-receiving portion 70 with an opening therein. A cam-like stem 72 extends inwardly from the finger-receiving portion 70 of the actuator 68; and that cam-like stem merges into a cylindrical extension 73. A spherical projection 74 is provided at the inner end of the cylindrical extension 73; and that spherical projection is dimensioned to fit snugly within the spherical recess defined by the semi-

spherical recesses 38 and 60 in the members 22 and 24. The cylindrical extension 73 of the actuator 68 is dimensioned to fit snugly within the cylindrical recess defined by the semi-cylindrical recesses 40 and 62 in the members 22 and 44. The cam-like stem 72 of the actuator 68 is dimensioned to fit within the annular groove deformed by the grooves 24 and 46 in the members 22 and 44, whenever that actuator is in the normal position shown by FIGS. 1, 2, 4 and 5. Also, that cam-like stem 72 is intended to fit snugly within the annular recess 66 defined by the inner faces of the reduced-thickness peripheries 26 and 48 of the members 22 and 24, whenever that actuator is in that normal position. However, whenever the actuator 68 is rotated to the position shown by FIG. 3, the cam-like stem 72 thereof will engage portions of the confronting faces of the reduced-thickness peripheries 26 and 48 of the members 22 and 44 and force those portions apart. As it does so, it will make a section of the annular groove within the key holder 20 much wider than normal.

The numeral 76 generally denotes key-holding clips which have spherical projections 78 thereon. While different forms of key-holding clips could be used, the form shown in the drawing is very useful and is commercially available. That form of key-holding clip defines a loop which can accommodate one end of a key; and that form of key-holding clip has two wire-like arms which abut each other and which carry hollow, semi-spherical protuberances that coact to define the spherical projection 78.

To enable one of the key-holding clips 76 to hold a key, it is only necessary to separate the two hollow, semi-spherical projections on the ends of the two wire-like arms of that clip, and then telescope one of those hollow, semi-spherical projections and one of those wire-like arms through the opening in the key. Thereafter, the resilience of that key-holding clip will force the two hollow, semi-spherical projections and the two wire-like arms into engagement with each other.

To assemble a key-holding clip with the key holder 20, it is only necessary to rotate the actuator 68 from the normal position shown in FIGS. 1, 2, 4 and 5 to the actuating position shown by FIG. 3. As that actuator is so rotated, the cam-like stem 72 thereof will engage portions of the confronting faces of the reduced-thickness peripheries 26 and 48 of the members 22 and 44 and force those portions apart until the distance between them is greater than the diameter of the annular groove formed by the grooves 24 and 46. Only those portions of the reduced-thickness peripheries 26 and 48 which are immediately adjacent the cam-like stem 72 of the actuator 68 will be forced far enough apart to make the distance between them greater than the diameter of the annular groove defined by the grooves 24 and 46; and this is desirable because it enables the key holder 20 to hold the rest of the key-holding clips 76 against accidental separation from that key holder. The spherical projection 78 of the key-holding clip 76 which is to be assembled with the key holder 20 will then be passed between the said portions of the confronting faces of the reduced-thickness peripheries 26 and 48 of the members 22 and 44 and will be moved into register with the annular groove which is formed by the grooves 24 and 46. Thereafter, the actuator 68 will be rotated back to its normal position; and thereupon the restorative forces within the members 22 and 44 will force the said portions of the confronting faces of the reduced-thickness peripheries 26 and 48 back toward each other until those portions are spaced apart their normal distance—a distance considerably less than the diameter of the annular groove formed by the grooves 24 and 46.

Whenever a key-holding clip 76 is to be separated from the key holder 20, the actuator 68 will be rotated from its normal position to the actuating position of FIG. 3; and then the spherical projection 78 of that key-holding clip will be moved close to the actuator 68. That spheri-

cal projection can then be moved radially outwardly between the widely-spaced portions of the confronting faces of the reduced thickness peripheries 26 and 48 of the members 22 and 44.

It will be noted that the finger-receiving portion 70 of the actuator 68 normally lies in the plane defined by the key holder 20. As a result, the key holder will be essentially flat and will occupy only a small space within the user's pocket or purse. Further, any forces which are applied to the sides of the key holder 20 will tend to hold the actuator 68 in its normal position and will not tend to rotate it to its actuating position.

The key-holding clips 76 will be able to rotate freely relative to the key holder 20 about axes defined by the wire-like arms thereof, and will also be able to move circumferentially of that key holder. As a result, those key-holding clips will not be strongly affected by forces which could otherwise tend to cause those key-holding clips to be accidentally separated from the key holder 20. Furthermore, those key-holding clips will be readily movable toward and away from each other to enable the user of the key holder 20 to single out any desired key. Yet, those key-holding clips will be solidly held against accidental separation from that key holder.

Whereas the drawing and accompanying description have shown and described a preferred embodiment of the present invention, it should be apparent to those skilled in the art that various changes may be made in the form of the invention without affecting the scope thereof:

What I claim is:

1. A key holder that comprises:

(*a*) a circular, disc-like member of thermoplastic material,

(*b*) an annular groove in the inner face of said member that has a semi-circular cross section,

(*c*) said member having a reduced-width periphery extending outwardly from the outer periphery of said groove in said inner face of said member to the periphery of said member,

(*d*) a semi-spherical recess in said inner face of said member,

(*e*) said semi-spherical recess being disposed inwardly of said groove,

(*f*) a semi-cylindrical recess in said inner face of said member,

(*g*) said semi-cylindrical recess extending between and connecting said semi-spherical recess and said groove,

(*h*) said semi-cylindrical recess being radially-directed,

(*i*) a second circular, disc-like member of thermoplastic material,

(*j*) an annular groove in the inner face of said second member that has a semi-circular cross section,

(*k*) said annular groove in said inner face of said second member being in register with and immediately adjacent said annular groove in said inner face of the first said member,

(*l*) said annular grooves coacting to form a composite annular groove of substantially circular cross section within said key holder,

(*m*) said second member having a reduced-width periphery extending outwardly from the outer periphery of said groove in said inner face of said second member to the periphery of said second member,

(*n*) said reduced-width periphery of said second member being in register with said reduced-width periphery of the first said member,

(*o*) said reduced-width peripheries coacting to define a peripheral recess in said key holder,

(*p*) a semi-spherical recess in said inner face of said second member that is in register with said semi-spherical recess in said inner face of the first said member,

(*q*) said semi-spherical recesses coacting to form a composite spherical recess within said key holder,

(*r*) said composite spherical recess being disposed inwardly of said composite annular groove,

(*s*) a semi-cylindrical recess in said inner face of said second member,

(*t*) said semi-cylindrical recess in said inner face of said second member extending between and connecting said semi-spherical recess and said annular groove in said inner face of said second member,

(*u*) said semi-cylindrical recess in said inner face of said second member being radially-directed,

(*v*) said semi-cylindrical recesses in said inner faces of the first said and said second members being in register and forming a composite cylindrical recess, and

(*w*) an actuator that has a finger-receiving portion, a cam-like stem, a cylindrical extension, and a spherical projection,

(*x*) said spherical projection on said actuator being dimensioned to fit neatly within said composite spherical recess within said key holder and to be rotatable relative to said composite spherical recess,

(*y*) said cylindrical extension on said actuator being dimensioned to fit neatly within said composite cylindrical recess within said key holder and to be rotatable relative to said composite cylindrical recess,

(*z*) said cam-like stem on said actuator being generally rectangular in cross section,

(*aa*) said cam-like stem on said actuator being diminished to fit neatly within said peripheral recess in said key holder, whenever said actuator is in its normal position,

(*ab*) said cam-like stem on said actuator being dimensioned to widen the section, of said peripheral recess in said key holder, immediately adjacent said cam-like stem whenever said actuator is rotated to its actuating position,

(*ac*) said reduced-width peripheries of the first said and said second members normally being spaced apart a distance less than the diameter of the holding portion of a key-holding clip, and thereby normally being able to hold said key-holding clip in assembled relation with said key holder,

(*ad*) said cam-like stem on said actuator being dimensioned to space said reduced-width peripheries of the first said and said second members apart a distance greater than said diameter of said holding portion of said key-holding clip,

(*ae*) said composite annular groove normally confining said holding portion of said key-holding clip while permitting ready rotation of said holding portion of said key-holding clip and also permitting ready movement of that holding portion of said key-holding clip circumferentially of said key holder.

2. A key holder that comprises:

(*a*) a disc-like member of resilient material,

(*b*) an annular groove in the inner face of said member that has a semi-circular cross section,

(*c*) said member having a reduced-width periphery extending outwardly from the outer periphery of said groove in said inner face of said member to the periphery of said member,

(*d*) a semi-spherical recess in said inner face of said member,

(*e*) said semi-spherical recess being disposed inwardly of said groove,

(*f*) a semi-cylindrical recess in said inner face of said member,

(*g*) said semi-cylindrical recess extending between and connecting said semi-spherical recess and said groove,

(*h*) a second disc-like member of resilient material,

(*i*) an annular groove in the inner face of said second member that has a semi-circular cross section,

(*j*) said annular groove in said inner face of said second member being in register with and immediately

adjacent said annular groove in said inner face of the first said member,

(*k*) said annular grooves coacting to form a composite annular groove of substantially circular cross section within said key holder,

(*l*) said second member having a reduced-width periphery extending outwardly from the outer periphery of said groove in said inner face of said second member to the periphery of said second member,

(*m*) said reduced-width periphery of said second member being in register with said reduced-width periphery of the first said member to define a peripheral recess for said key holder,

(*n*) a semi-spherical recess in said inner face of said second member that is in register with said semi-spherical recess in said inner face of the first said member and that coacts with the latter recess to form a composite spherical recess within said key holder,

(*o*) said composite spherical recess being disposed inwardly of said composite annular groove,

(*p*) a semi-cylindrical recess in said inner face of said second member that extends between and connects said semi-spherical recess and said annular groove in said inner face of said second member,

(*q*) said semi-cylindrical recesses in said inner faces of the first said and said second members being in register and forming a composite cylindrical recess, and

(*r*) an actuator that has a finger-receiving portion, a cam-like stem, a cylindrical extension, and a spherical projection,

(*s*) said spherical projection on said actuator being dimensioned to fit neatly within said composite spherical recess within said key holder and to be rotatable relative to said composite spherical recess,

(*t*) said cylindrical extension on said actuator being dimensioned to fit neatly within said composite cylindrical recess within said key holder and to be rotatable relative to said composite cylindrical recess,

(*u*) said cam-like stem on said actuator being generally rectangular in cross section,

(*v*) said cam-like stem on said actuator being dimensioned to fit neatly within said peripheral recess in said key holder, whenever said actuator is in its normal position,

(*w*) said cam-like stem on said actuator being dimensioned to widen the section, of said peripheral recess in said key holder, immediately adjacent said cam-like stem whenever said actuator is rotated to its actuating position,

(*x*) said reduced-width peripheries of the first said and said second members normally being spaced apart a distance less than the diameter of the holding portion of a key-holding clip, and thereby normally being able to hold said key-holding clip in assembled relation with said key holder,

(*y*) said cam-like stem on said actuator being dimensioned to space said reduced-width peripheries of the first said and said second members apart a distance greater than said diameter of said holding portion of said key-holding clip,

(*z*) said composite annular groove normally confining said holding portion of said key-holding clip while permitting ready rotation of said holding portion of said key-holding clip and also permitting ready movement of that holding portion of said key-holding clip circumferentially of said key holder.

3. A key holder that comprises:

(*a*) a disc-like member of resilient material,

(*b*) an annular groove in the inner face of said member,

(*c*) said member having a reduced-width periphery extending outwardly from the outer periphery of said groove in said inner face of said member to the periphery of said member,

(*d*) a recess in said inner face of said member,

(*e*) said recess being disposed inwardly of said groove,

(*f*) a connecting recess in said inner face of said member that extends between and connects said recess and said groove,

(*g*) a second disc-like member of resilient material,

(*h*) an annular groove in the inner face of said second member,

(*i*) said annular groove in said inner face of said second member being in register with and immediately adjacent said annular groove in said inner face of the first said member, to form a composite annular groove within said key holder,

(*j*) said second member having a reduced-width periphery extending outwardly from the outer periphery of said groove in said inner face of said second member to the periphery of said second member,

(*k*) said reduced-width periphery of said second member being in register with said reduced-width periphery of the first said member, to define a peripheral recess for said key holder,

(*l*) a recess in said inner face of said second member that is in register with said recess in said inner face of the first said member and that coacts with the latter recess to form a composite recess within said key holder,

(*m*) said composite recess being disposed inwardly of said composite annular groove,

(*n*) a connecting recess in said inner face of said second member that extends between and connects said recess and said annular groove in said inner face of said second member,

(*o*) said connecting recesses in said inner faces of the first said and said second members being in register and forming a composite connecting recess, and

(*p*) an actuator that has a finger-receiving portion, a cam-like stem, an extension, and a holding projection,

(*q*) said holding projection on said actuator being dimensioned to fit neatly within said composite recess within said key holder and to be rotatable relative to said composite recess,

(*r*) said extension on said actuator being dimensioned to fit neatly within said composite connecting recess within said key holder and to be rotatable relative to said composite connecting recess,

(*s*) said cam-like stem on said actuator having one transverse dimension longer than another transverse dimension thereof,

(*t*) said cam-like stem on said actuator being dimensioned to fit neatly within said peripheral recess in said key holder, whenever said actuator is in its normal position,

(*u*) said cam-like stem on said actuator being dimensioned to widen the section, of said peripheral recess in said key holder, immediately adjacent said cam-like stem whenever said actuator is rotated to its actuating position,

(*v*) said reduced-width peripheries of the first said and said second members normally being spaced apart a distance less than the diameter of the holding portion of a key-holding clip, and thereby normally being able to hold said key-holding clip in assembled relation with said key holder,

(*w*) said cam-like stem on said actuator being dimensioned to space said reduced-width peripheries of the first said and said second members apart a distance greater than said diameter of said holding portion of said key-holding clip,

(*x*) said composite annular groove normally confining said holding portion of said key-holding clip while permitting ready rotation of said holding portion of said key-holding clip and also permitting ready move-

ment of that holding portion of said key-holding clip circumferentially of said key holder.

4. A key holder that comprises:

(a) spaced apart surfaces that coact to define a recess,

(b) a groove that is spaced inwardly from said recess,

(c) a second groove that is spaced inwardly from said recess,

(d) said grooves being in register with and adjacent each other and coacting to form a composite groove within said key holder that is disposed inwardly of said recess in said key holder,

(e) the width of said composite groove within said key holder being greater than the normal width of said recess in said key holder, and

(f) an actuator that has a portion thereof disposed within said recess in said key holder and that can be moved to force sections of said surfaces further apart to make the spacing between said sections of said surfaces at least as great as the width of said composite groove within said key holder,

(g) said key holder including two members and each of said members having one of said spaced apart surfaces thereon,

(h) each of said members having one of said grooves therein,

(i) each of said members having a recess therein and said recesses coacting to receive and hold a second portion of said actuator,

(j) said actuator being movable relative to said members but being held against separation from said members by said recesses in said members and by said second portion of said actuator,

(k) the first said portion of said actuator being generally rectangular in cross section,

(l) said second portion of said actuator being generally spherical.

5. A key holder that comprises:

(a) spaced apart surfaces that coact to define a recess,

(b) a groove that is spaced inwardly from said recess,

(c) a second groove that is spaced inwardly from said recess,

(d) said grooves being in register with and adjacent each other and coacting to form a composite groove within said key holder that is disposed inwardly of said recess in said key holder,

(e) the width of said composite groove within said key holder being greater than the normal width of said recess in said key holder, and

(f) an actuator that has a portion thereof disposed within said recess in said key holder and that can be moved to force sections of said surfaces further apart to make the spacing between said sections of said surfaces at least as great as the width of said composite groove within said key holder,

(g) said key holder including two members and each of said members having one of said spaced apart surfaces thereon,

(h) each of said members having one of said grooves therein,

(i) each of said members having a recess therein and said recesses coacting to receive and hold a second portion of said actuator,

(j) said actuator being movable relative to said members but being held against separation from said members by said recesses in said members and by said second portion of said actuator.

6. A key holder that comprises:

(a) spaced apart surfaces that coact to define a recess,

(b) a groove that is spaced inwardly from said recess,

(c) a second groove that is spaced inwardly from said recess,

(d) said grooves being in register with and adjacent each other and coacting to form a composite groove within said key holder that is disposed inwardly of said recess in said key holder,

(e) the width of said composite groove within said key holder being greater than the normal width of said recess in said key holder, and

(f) an actuator that is carried by said surfaces and that has a portion thereof disposed within said recess in said key holder,

(g) said portion of said actuator being wider than it is deep so it normally permits said surfaces to have a predetermined spacing and so it can be moved to force sections of said surfaces further apart to make the spacing between said sections of said surfaces at least as great as the width of said composite groove within said key holder.

7. A key holder that comprises:

(a) spaced apart surfaces that coact to define a recess,

(b) a groove that is spaced inwardly from said recess,

(c) the width of said groove being greater than the normal width of said recess,

(d) an actuator that has a portion thereof disposed within said recess in said key holder and that can be moved to force sections of said surfaces further apart to make the spacing between said sections of said surfaces at least as great as the width of said groove within said key holder, and

(e) a recess within said key holder that is disposed inwardly of said groove,

(f) said recess within said key holder receiving and holding a second portion of said actuator,

(g) said actuator being movable relative to said key holder but being held against separation from said key holder by said recess within said key holder and by said second portion of said actuator.

8. A key holder that comprises:

(a) spaced apart surfaces that coact to define a recess,

(b) a groove that is spaced inwardly from said recess,

(c) the width of said groove being greater than the normal width of said recess, and

(d) an actuator that is assembled with and carried by said surfaces and that has a portion thereof disposed within said recess in said key holder,

(e) said portion of said actuator being wider than it is deep so it normally permits said surfaces to have a predetermined spacing and so it can be moved to force sections of said surfaces further apart to make the spacing between said sections of said surfaces at least as great as the width of said groove within said key holder.

9. A key holder that comprises:

(a) a member of resilient material,

(b) an annular groove in the inner face of said member,

(c) said member having an offset surface extending outwardly from the outer periphery of said groove in said inner face of said member to the periphery of said member,

(d) a recess in said inner face of said member that is disposed inwardly of said groove,

(e) a connecting recess in said inner face of said member, that extends between and connects said recess and said groove,

(f) a second member of resilient material,

(g) an annular groove in the inner face of said second member,

(h) said annular groove in said inner face of said second member being in register with and immediately adjacent said annular groove in said inner face of the first said member, to form a composite annular groove within said key holder,

(i) said second member having an offset surface extending outwardly from the outer periphery of said groove in said inner face of said second member to the periphery of said second member,

(j) said offset surface of said second member being in register with said offset surface of the first said member, to define a peripheral recess in said key holder,
(k) a recess in said inner face of said second member that is in register with said recess in said inner face of the first said member and that coacts with the latter recess to form a composite recess which is within said key holder and which is disposed inwardly of said composite annular groove,
(l) a connecting recess in said inner face of said second member that extends between and connects said recess and said annular groove in said inner face of said second member,
(m) said connecting recesses in said inner faces of the first said and said second members being in register and forming a composite connecting recess, and
(n) an actuator that has a finger-receiving portion, a cam-like stem, an extension, and a holding projection,
(o) said holding projection on said actuator being dimensioned to fit neatly within said composite recess within said key holder and to be rotatable relative to said composite recess,
(p) said extension on said actuator being dimensioned to fit neatly within said composite connecting recess within said key holder and to be rotatable relative to said composite connecting recess,
(q) said cam-like stem on said actuator being dimensioned to fit neatly within said peripheral recess in said key holder, whenever said actuator is in its normal position,
(r) said cam-like stem on said actuator being dimensioned to widen the section, of said peripheral recess in said key holder, immediately adjacent said cam-like stem whenever said actuator is rotated to its actuating position,
(s) said offset surfaces of the first said and said second members normally being spaced apart a distance less than the diameter of the holding portion of a key-holding clip, and thereby normally being able to hold said key-holding clip in assembled relation with said key holder,
(t) said cam-like stem on said actuator being dimensioned to space said offset surfaces of the first said and said second members apart a distance greater than said diameter of said holding portion of said key-holding clip,
(u) said composite annular groove normally confining said holding portion of said key-holding clip while permitting ready rotation of said holding portion of said key-holding clip and also permitting ready movement of that holding portion of said key-holding clip circumferentially of said key holder.

10. A key holder that comprises:
(a) a member,
(b) a groove in the inner face of said member,
(c) said member having an offset-surface extending outwardly from the outer periphery of said groove in said inner face of said member to the periphery of said member,
(d) a recess in said inner face of said member that is disposed inwardly of said groove,
(e) a second member,
(f) a groove in the inner face of said second member,
(g) said groove in said inner face of said second member being in register with and immediately adjacent said groove in said inner face of the first said member to form a composite groove within said key holder,
(h) said second member having an offset surface extending outwardly from the outer periphery of said groove in said inner face of said second member to the periphery of said second member,
(i) said offset surface of said second member being in register with said offset surface of the first said member to define a peripheral recess in said key holder,
(j) a recess in said inner face of said second member that is in register with said recess in said inner face of the first said member and that coacts with the latter recess to form a composite recess which is within said key holder and which is disposed inwardly of said composite groove, and
(k) an actuator that has a finger-receiving portion, a cam-like stem, and a holding projection,
(l) said holding projection on said actuator being dimensioned to fit neatly within said composite recess within said key holder and to be movable relative to said composite recess,
(m) said cam-like stem on said actuator being dimensioned to fit neatly within said peripheral recess in said key holder, whenever said actuator is in its normal position,
(n) said cam-like stem on said actuator being dimensioned to widen the section, of said peripheral recess in said key holder, immediately adjacent said cam-like stem whenever said actuator is moved to its actuating position,
(o) said offset surfaces of the first said and said second members normally being spaced apart a distance less than the diameter of the holding portion of a key-holding clip, and thereby normally being able to hold said key-holding clip in assembled relation with said key holder,
(p) said cam-like stem on said actuator being dimensioned to space said offset surfaces of the first said and said second members apart a distance greater than said diameter of said holding portion of said key-holding clip,
(q) said composite groove normally confining said holding portion of said key-holding clip while permitting ready rotation of said holding portion of said key-holding clip and also permitting ready movement of that holding portion of said key-holding clip circumferentially of said key holder.

11. A key holder that comprises:
(a) a member,
(b) a groove in the inner face of said member,
(c) said member having an offset surface extending outwardly from the outer periphery of said groove in said inner face of said member to the periphery of said member,
(d) a second member,
(e) a groove in the inner face of said second member,
(f) said groove in said inner face of said second member being in register with and immediately adjacent said groove in said inner face of the first said member to form a composite groove within said key holder,
(g) said second member having an offset surface extending outwardly from the outer periphery of said groove in said inner face of said second member to the periphery of said second member,
(h) said offset surface of said second member being in register with said offset surface of the first said member to define a peripheral recess in said key holder,
(i) an actuator, and
(j) interacting surfaces on said actuator and on said key holder that maintain said actuator and said key holder in assembled relation while permitting movement of said actuator relative to said key holder,
(k) said actuator having a portion thereof that is disposed within said peripheral recess in said key holder and that can respond to movement of said actuator to widen the section of said peripheral recess immediately adjacent thereto,
(l) said offset surfaces of the first said and said second members normally being spaced apart a distance less than the diameter of the holding portion of a key-holding clip, and thereby normally being able to

hold said key-holding clip in assembled relation with said key holder,

(*m*) said portion of said actuator being adapted to space said offset surfaces of the first said and said second members apart a distance greater than said diameter of said holding portion of said key-holding clip,

(*n*) said composite groove normally confining said holding portion of said key-holding clip while permitting ready rotation of said holding portion of said key-holding clip and also permitting ready movement of that holding portion of said key-holding clip circumferentially of said key holder.

12. A key holder that comprises:

(*a*) a member,

(*b*) a groove in the inner face of said member,

(*c*) said member having an offset surface extending outwardly from the outer periphery of said groove in said inner face of said member to the periphery of said member,

(*d*) a second member,

(*e*) a groove in the inner face of said second member,

(*f*) said groove in said inner face of said second member being in register with and immediately adjacent said groove in said inner face of the first said member to form a composite groove within said key holder,

(*g*) said second member having an offset surface extending outwardly from the outer periphery of said groove in said inner face of said second member to the periphery of said second member,

(*h*) said offset surface of said second member being in register with said offset surface of the first said member to define a peripheral recess in said key holder,

(*i*) an actuator, and

(*j*) interacting surfaces on said actuator and on said key holder that maintain said actuator and said key holder in assembled relation while permitting movement of said actuator relative to said key holder,

(*k*) said actuator having a portion thereof that is disposed within said peripheral recess in said key holder and that can respond to movement of said actuator to widen the section of said peripheral recess immediately adjacent thereto.

References Cited by the Examiner

UNITED STATES PATENTS

2,737,046 3/56 Jancsics ---------- 70—457

FOREIGN PATENTS

1,125,991 7/56 France.

M. HENSON WOOD, JR., *Primary Examiner.*