(12) INTERNATIONAL APPLICATION PUBLISHED UNDER THE PATENT COOPERATION TREATY (PCT)

(19) World Intellectual Property Organization
International Bureau

(43) International Publication Date
14 May 2010 (14.05.2010)

PCT

(10) International Publication Number
WO 2010/052630 A1

(51) International Patent Classification:
H05B 41/288 (2006.01)

(21) International Application Number:
PCT/IB2009/054850

(22) International Filing Date:
2 November 2009 (02.11.2009)

(25) Filing Language: English

(26) Publication Language: English

(30) Priority Data:
08168540.6 7 November 2008 (07.11.2008) EP

(71) Applicant *(for all designated States except US)*: **KONINKLIJKE PHILIPS ELECTRONICS N.V.** [NL/NL]; Groenewoudseweg 1, NL-5621 BA Eindhoven (NL).

(72) Inventor; and

(75) Inventor/Applicant *(for US only)*: **VAN CASTEREN, Dolf, H., J.** [NL/NL]; c/o High Tech Campus Building 44, NL-5656 AE Eindhoven (NL).

(74) Agents: **BEKKERS, Joost, J., J.** et al.; High Tech Campus 44, NL-5600 AE Eindhoven (NL).

(81) Designated States *(unless otherwise indicated, for every kind of national protection available)*: AE, AG, AL, AM, AO, AT, AU, AZ, BA, BB, BG, BH, BR, BW, BY, BZ, CA, CH, CL, CN, CO, CR, CU, CZ, DE, DK, DM, DO, DZ, EC, EE, EG, ES, FI, GB, GD, GE, GH, GM, GT, HN, HR, HU, ID, IL, IN, IS, JP, KE, KG, KM, KN, KP, KR, KZ, LA, LC, LK, LR, LS, LT, LU, LY, MA, MD, ME, MG, MK, MN, MW, MX, MY, MZ, NA, NG, NI, NO, NZ, OM, PE, PG, PH, PL, PT, RO, RS, RU, SC, SD, SE, SG, SK, SL, SM, ST, SV, SY, TJ, TM, TN, TR, TT, TZ, UA, UG, US, UZ, VC, VN, ZA, ZM, ZW.

(84) Designated States *(unless otherwise indicated, for every kind of regional protection available)*: ARIPO (BW, GH, GM, KE, LS, MW, MZ, NA, SD, SL, SZ, TZ, UG, ZM, ZW), Eurasian (AM, AZ, BY, KG, KZ, MD, RU, TJ, TM), European (AT, BE, BG, CH, CY, CZ, DE, DK, EE, ES, FI, FR, GB, GR, HR, HU, IE, IS, IT, LT, LU, LV, MC, MK, MT, NL, NO, PL, PT, RO, SE, SI, SK, SM, TR), OAPI (BF, BJ, CF, CG, CI, CM, GA, GN, GQ, GW, ML, MR, NE, SN, TD, TG).

Declarations under Rule 4.17:

— *as to applicant's entitlement to apply for and be granted a patent (Rule 4.17(ii))*

[Continued on next page]

(54) Title: LAMP DRIVER

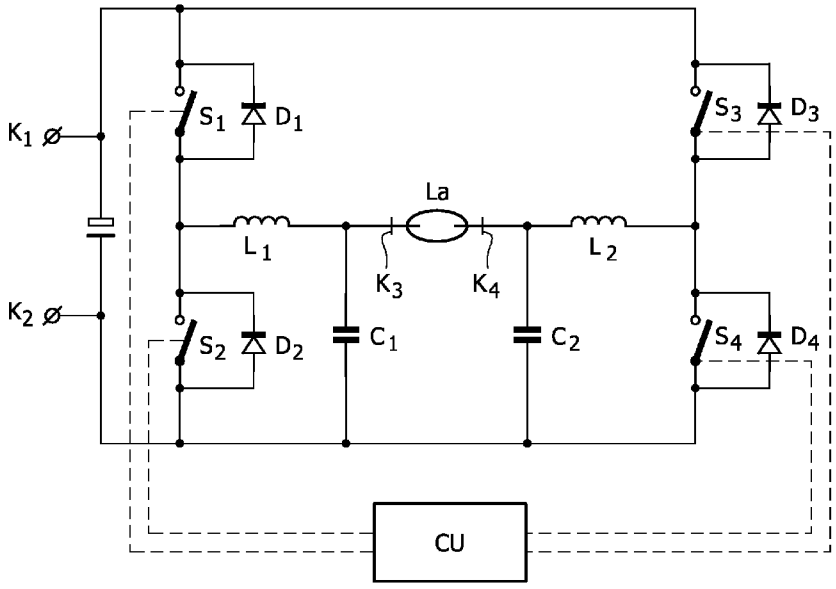

FIG. 1

(57) Abstract: The invention relates to a control unit for a lamp driver being adapted to control the operation of a lamp during at least an ignition mode, a run-up mode and a steady- state mode, the lamp driver comprising a down-convertor and an alternator being connectable to the lamp, said alternator providing a voltage to the lamp to ignite the lamp during the ignition mode, and said down-convertor providing a current to the lamp during at least the run-up mode and the steady-state mode, wherein the control unit is arranged to control the alternator in buck converter mode during steady-state mode to provide a substantially constant voltage to the alternator side of the lamp driver.

WO 2010/052630 A1

Published:

— *with international search report (Art. 21(3))*

Lamp driver

FIELD OF THE INVENTION

The invention relates to a control unit for a lamp driver, and more specifically to a lamp driver for an ultra-high performance (UHP) light source, e.g. comprised in a projection system. The control unit of the present invention is particularly useful in high pressure mercury (HPM) or high-intensity discharge (HID) lamps.

BACKGROUND OF THE INVENTION

A lamp driver for a high-intensity discharge (HID) lamp is used to ignite the lamp by generating a high voltage. After the lamp is ignited, the lamp is slowly warmed up by a limited current. When the lamp has reached its full power, it changes to power control keeping the lamp power constant. To realize this, a number of modes are defined within the lamp driver. These modes are:

1. ignition mode including take-over phase (lamp is ignited by generating a high voltage);
2. run-up mode (lamp is warming up by a limited current); and
3. steady-state mode (lamp at full power, lamp power is controlled).

WO2006/011113 discloses a control unit for a lamp driver which provides a smooth transition between various operation modes of the lamp driver, in particular between ignition mode and run-up mode, by comprising means for providing, initially in an ignition mode, a predetermined start value of current to the lamp, and means for, subsequently in the ignition mode, increasing the provided current to a predetermined maximum value.

WO2006/011113 also discloses a control unit for a lamp driver in which the switching behavior is improved in run-up mode. The lamp driver comprises a down-convertor and an alternator (also referred to as a Full Bridge Commutating Forward (FBCF) topology) to provide a voltage and/or a current to a lamp, wherein the control unit is adapted to control the alternator to maintain running at high frequency during run-up mode, and to cause the frequency to decrease when a measured lamp voltage is equal to a predetermined value.

During steady-state mode, the lamp current in principle has a substantially constant magnitude, but the lamp current changes direction at regular intervals by switching both the down-convertor and the alternator. A full lamp period comprises a first time interval wherein the lamp current has one direction, and a second time interval wherein the lamp current has the reverse direction. Changing from one direction to the other is also called "commutation". A disadvantage of lamp drivers having a FBCF topology is that they lack a smooth commutation process and show a hard switching behavior in steady-state mode. This has a negative influence on the efficiency of the lamp driver, especially as the steady-state mode is the mode in which the lamp is driven most of the time.

Theoretical, it would be possible to improve the switching behavior by adapting the control unit to control the alternator to maintain running at high frequency during steady-state mode, similar to the control unit of WO2006/011113 in run-up mode, however, in this mode of operation the maximum lamp current is limited and therefore the nominal lamp power cannot be established.

SUMMARY OF THE INVENTION

It would be desirable to provide a control unit for a lamp driver in which the switching behavior is improved. It would also be desirable to increase the efficiency of a lamp driver.

To better address one or more of these concerns, a control unit is provided for a lamp driver being arranged to control the operation of a lamp during at least an ignition mode, a run-up mode and a steady-state mode, the lamp driver comprising a down-convertor and an alternator being connectable to the lamp, said alternator providing a voltage to the lamp to ignite the lamp during the ignition mode, and said down-convertor providing a current to the lamp during at least the run-up mode and the steady-state mode, wherein the control unit is arranged to control the alternator in buck convertor mode during steady-state mode to provide a substantially constant voltage to the alternator side of the lamp driver.

If a diode is present in the circuit and it is an internal body diode associated with for instance a MOSFET switch, this internal body diode behaves badly at relatively high frequencies, especially at the transition from the conductive state to the non-conductive state, which causes relatively much loss of energy. Even if separate diodes are used, the diodes contribute to energy losses when its corresponding switch is actively switching. When the alternator provides the substantially constant voltage at the alternator side by continuously operating in buck convertor mode, the bad switching behavior of diodes that may be present

in the alternator can be circumvented, and zero voltage switching can be achieved, thereby resulting in an improved switching behavior of the alternator and in an overall increased circuit efficiency.

An additional advantage is that the Full Bridge Commutating Forward (FBCF) topology is able to mimic a Half Bridge Commutating Forward (HBCF) topology, wherein the substantially constant voltage is provided by two series buffer capacitors. Due to the substantially constant voltage at the alternator side of the lamp driver, the down-convertor can be continuously operated in buck convertor mode as well. This has the same advantages as for the alternator, thereby improving the switching behavior of the down-convertor and further increasing the overall circuit efficiency.

Further, the continuous operation of the down-convertor in buck convertor mode in combination with the substantially constant voltage at the alternator side, which is preferably half the supply voltage to the lamp driver, allows to commutate the lamp current without changing the switching mode. Commutation can then be achieved by changing the duty-cycle of the down-convertor, which results in a smooth commutation process comparable with a HBCF topology.

In an embodiment of the invention, the control unit comprises a feedback loop to control the alternator in buck convertor mode. The control unit therefore monitors the voltage at the alternator side of the lamp driver and provides appropriate control signals to the alternator to provide a substantially constant voltage at the alternator side. In this way a stable voltage can be provided at the alternator side, thereby improving the commutation of the lamp current.

In another embodiment of the invention, the control unit is further adapted to bring the alternator in buck convertor mode during run-up mode to provide a substantially constant voltage to the alternator side of the lamp driver. When the alternator is in buck convertor mode during run-up mode, the previous mentioned advantages during steady-state mode also apply for run-up mode, which results in an improved switching behavior of the alternator and thereby in a further increased overall circuit efficiency. It also provides for a smooth transition from run-up mode to steady state mode.

The control unit may advantageously be implemented in a lamp driver, which may in turn be inserted in a projection system, which also comprises an ultra-high performance (UHP) light source. The UHP light source may, e.g., be a high pressure mercury (HPM) or a high-intensity discharge (HID) lamp. Alternatively, the lamp driver may be implemented in an illumination system, a luminaire or a display system, e.g. a projection

display system. A display system comprising a lamp driver as described may also be employed in a direct view LCD system. Alternatively or additionally, the control unit and/or the lamp driver may be used in any other suitable apparatus.

These and other aspects of the invention will be more readily appreciated as the same becomes better understood by reference to the following detailed description and considered in connection with the accompanying drawings in which like reference symbols designate like parts.

BRIEF DESCRIPTION OF THE DRAWINGS

Figure 1 depicts a circuit diagram for a lamp driver including a control unit according to the invention.

DETAILED DESCRIPTION OF EMBODIMENTS

Figure 1 depicts a control unit CU for a lamp driver being adapted to control the operation of a lamp La during at least an ignition mode, a run-up mode and a steady-state mode, the lamp driver comprising a down-convertor and an alternator being connectable to the lamp La, said alternator providing a voltage to the lamp La to ignite the lamp La during ignition mode, and said down-convertor providing a current to the lamp La during at least run-up mode and steady-state mode, wherein the control unit is adapted to bring the alternator in buck convertor mode during steady-state mode to provide a substantially constant voltage to the alternator side of the lamp driver.

The down-convertor comprises a first capacitor C1, a first inductive coil L1, a first switch S1 and corresponding diode D1, and a second switch S2 and corresponding diode D2. The duty cycle of the down-convertor determines the output current, which is the current through inductive coil L1.

The alternator comprises a second capacitor C2, a second inductive coil L2, a third switch S3 and a corresponding diode D3, and a fourth switch S4 and corresponding diode D4. A DC supply voltage is supplied to the lamp driver through input terminals K1 and K2.

The switches and corresponding diodes can be provided as single elements, but it is also possible that they are provided as a combination, such as for instance a MOSFET switch, which already has an internal body diode similar to the diodes drawn in this circuit diagram.

The lamp La is connected to the down-convertor by output terminal K3, also referred to as the down-convertor side of the lamp driver. The lamp La is connected to the alternator by output terminal K4, also referred to as the alternator side of the lamp driver.

When the fourth switch S4 is conducting, the voltage at output terminal K4 is in principle equal to the voltage at input terminal K2, thereby the voltage applied to the lamp La is equal to the voltage applied at capacitor C1 minus the voltage applied at input terminal K2. Preferably, the voltage at input terminal K2 is zero, making the voltage applied to the lamp La equal to the voltage applied to the capacitor C1. When on the other hand, the third switch S3 is conducting, the voltage applied to the lamp is in principle equal to the supply voltage minus the voltage applied at capacitor C1.

The main function of the alternator is to generate the ignition voltage to ignite the lamp La during the ignition mode. During the ignition mode, the alternator is switching in a high frequency mode, preferably with a frequency which is larger than 100 kHz. Capacitor C2 and inductive coil L2 together form a resonant circuit. When the alternator is switching in a high frequency mode relatively close to a resonance frequency of the resonant circuit, it will generate a voltage that is able to ignite the lamp La.

Before the lamp La ignites, the down-convertor switches S1 and S2 may be non-conducting, or one of the switches S1 or S2 is made conducting and the other one is not. The down-convertor may also be switching in order to control a lamp current when the lamp La ignites. The advantage of the latter is that the lamp current is immediately available when the lamp La ignites. It is further possible that the down-convertor first realizes a relatively low current through the lamp when the lamp is ignited and subsequently, during ignition mode, increases the lamp current, preferably linearly, to a maximum value. This ensures that the lamp starts up smoothly and even warms up already in ignition mode.

After ignition mode, the run-up mode follows and various switching patterns are possible. It is possible that the alternator will decrease its switching frequency from the high frequency to a relatively low frequency. In a variant, the alternator is kept switching at a relatively high frequency.

After the run-up mode, the lamp driver will enter the steady-state mode and the control unit CU will bring the alternator in buck convertor mode to provide a substantially constant voltage at the alternator side. If the diodes D3 and D4 are internal body diodes of for instance a respective MOSFET switch, these diodes D3 and D4 behave badly at relatively high frequencies, especially at the transition from the conductive state to the non-conductive state, which causes relatively much loss of energy. Even if the diodes D3 and D4

are non-internal body diodes, they can contribute to energy losses when its associated switch is actively switching. An advantage of operating the alternator in buck convertor mode is that bad switching behavior of the diodes D3 and D4 can be avoided and zero voltage switching can be achieved, resulting in an improved switching behavior of the alternator and an increased circuit efficiency.

An additional advantage is that the circuit can mimic a Half Bridge Commutating Forward (HBCF) topology, as shown in for instance WO 2004/010742, thereby allowing the down-convertor to operate in buck convertor mode as well. This has the same advantages as for the alternator resulting in an improved switching behavior of the down-convertor and a further increased circuit efficiency. Further, commutation of the lamp current can be achieved by the down-convertor without altering the switching mode, but by changing the duty-cycle, thereby allowing a smooth commutation process.

In principle, the present invention combines the advantages of the HBCF and FBCF topologies. The FBCF topology has, amongst others, the advantage that no large buffer capacitors are required, and the HBCF topology may have, amongst others, a favorable switching behavior and a smooth commutation process. The present invention combines the FBCF topology with the switching behavior of the HBCF topology.

In buck convertor mode, the two switches of the respective alternator and down-convertor may be operated such that when one of the switches is conductive, the other switch is non-conductive and vice versa. Additionally, the switches can switch when a zero voltage/current is applied. This can be achieved by changing the duty cycle and/or the frequency of switching pattern, also referred to as transition mode operation of the switches.

The difference between the alternator and the down-convertor, is that the alternator is controlled to provide a substantially constant voltage, and the down-convertor is controlled to provide a current to the lamp. Thereto, the down-convertor preferably comprises a current sensor to measure the lamp current or to measure when the lamp current is zero for zero current/voltage switching.

Preferably, the substantially constant voltage at the alternator side is substantially half the supply voltage, thereby fully approximating the behavior of a HBCF topology. The voltage at the alternator side being half the supply voltage has the advantage that the available power is substantially equally divided over both directions of the lamp current.

The steady-state mode is commonly the mode in which the lamp is driven most of the time and thus improving the circuit efficiency in steady-state mode has the most

effect. However, circuit efficiency can also be improved in run-up mode. This has the same advantages as for steady-state mode, and additionally allows a smooth transition between run-up mode and steady-state mode.

As required, detailed embodiments of the present invention are disclosed herein; however, it is to be understood that the disclosed embodiments are merely exemplary of the invention, which can be embodied in various forms. Therefore, specific structural and functional details disclosed herein are not to be interpreted as limiting, but merely as a basis for the claims and as a representative basis for teaching one skilled in the art to variously employ the present invention in virtually any appropriately detailed structure. Further, the terms and phrases used herein are not intended to be limiting, but rather, to provide an understandable description of the invention.

The terms "a" or "an", as used herein, are defined as one or more than one. The term plurality, as used herein, is defined as two or more than two. The term another, as used herein, is defined as at least a second or more. The terms including and/or having, as used herein, are defined as comprising (i.e., open language, not excluding other elements or steps). Any reference signs in the claims should not be construed as limiting the scope of the claims or the invention.

The mere fact that certain measures are recited in mutually different dependent claims does not indicate that a combination of these measures cannot be used to advantage.

A single processor or other unit may fulfill the functions of several items recited in the claims.

The terms program, software application, and the like as used herein, are defined as a sequence of instructions designed for execution on a computer system. A program, computer program, or software application may include a subroutine, a function, a procedure, an object method, an object implementation, an executable application, an applet, a servlet, a source code, an object code, a shared library/dynamic load library and/or other sequence of instructions designed for execution on a computer system.

A computer program may be stored and/or distributed on a suitable medium, such as an optical storage medium or a solid-state medium supplied together with or as part of other hardware, but also be distributed in other forms, such as via the Internet or other wired or wireless telecommunication systems.

CLAIMS:

1. A control unit for a lamp driver being adapted to control the operation of a lamp during at least an ignition mode, a run-up mode and a steady-state mode, the lamp driver comprising a down-convertor and an alternator being connectable to the lamp, said alternator providing a voltage to the lamp to ignite the lamp during the ignition mode, and said down-convertor providing a current to the lamp during at least the run-up mode and the steady-state mode, wherein the control unit is arranged to control the alternator in buck convertor mode during steady-state mode to provide a substantially constant voltage to the alternator side of the lamp driver.

2. A control unit according to claim 1, wherein the substantially constant voltage at the alternator side of the lamp driver during steady-state is half a supply voltage supplied to the lamp driver.

3. A control unit according to claim 1 or 2, wherein the control unit further is arranged to change the duty cycle of the down-convertor in order to obtain commutation of the current provided to the lamp.

4. A control unit according to any of the claims 1-3, wherein the control unit comprises a feedback loop to control the alternator in buck convertor mode.

5. A control unit according to any of the claims 1-4, wherein the control unit further is arranged to control the alternator in buck convertor mode during run-up mode to provide a substantially constant voltage to the alternator side of the lamp driver.

6. A lamp driver comprising a control unit according to any of the claims 1-5.

7. An illumination system comprising a lamp driver according to claim 6.

8. A projection system comprising an ultra-high performance light source and a lamp driver according to claim 6.

9. A display system comprising a lamp driver according to claim 6.

10. A display system according to claim 9, said display system being a projection display system.

11. A direct view LCD system comprising a display system according to claim 9.

12. A luminaire comprising a lamp driver according to claim 6.

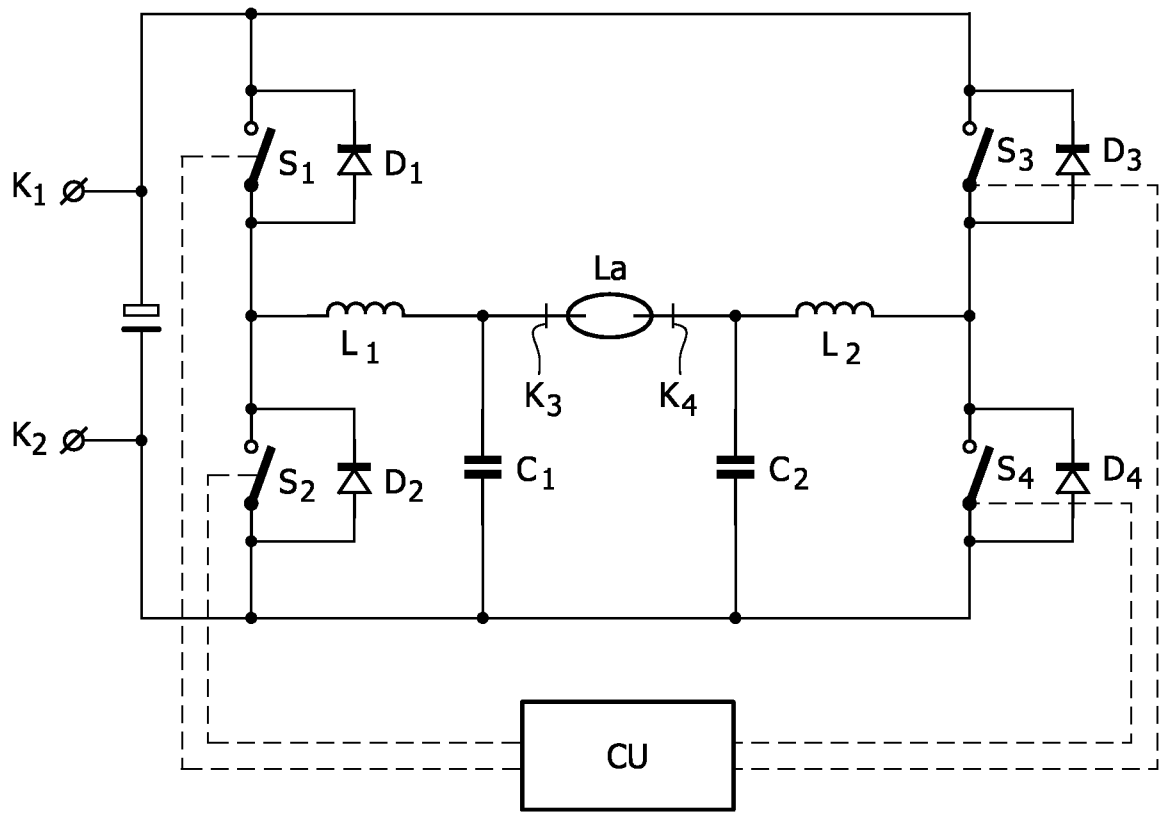

FIG. 1

INTERNATIONAL SEARCH REPORT

International application No
PCT/IB2009/054850

A. CLASSIFICATION OF SUBJECT MATTER
INV. H05B41/288

According to International Patent Classification (IPC) or to both national classification and IPC

B. FIELDS SEARCHED

Minimum documentation searched (classification system followed by classification symbols)
H05B

Documentation searched other than minimum documentation to the extent that such documents are included in the fields searched

Electronic data base consulted during the international search (name of data base and, where practical, search terms used)
EPO-Internal

C. DOCUMENTS CONSIDERED TO BE RELEVANT

Category*	Citation of document, with indication, where appropriate, of the relevant passages	Relevant to claim No.
X	WO 2006/011113 A1 (KONINKL PHILIPS ELECTRONICS NV [NL]; DE BROUWER LAMBERTUS H C [NL]; ZI) 2 February 2006 (2006-02-02)	1-3,5-12
A	the whole document	4
A	US 2005/062432 A1 (VAN CASTEREN DOLF HENRICUS JOZ [NL]) 24 March 2005 (2005-03-24) paragraphs [0057], [0058]	1-12
A	US 2007/182344 A1 (DE BROUWER LAMBERTUS H C [NL] ET AL) 9 August 2007 (2007-08-09) the whole document	1-12

☐ Further documents are listed in the continuation of Box C.

☒ See patent family annex.

* Special categories of cited documents :

"A" document defining the general state of the art which is not considered to be of particular relevance

"E" earlier document but published on or after the international filing date

"L" document which may throw doubts on priority claim(s) or which is cited to establish the publication date of another citation or other special reason (as specified)

"O" document referring to an oral disclosure, use, exhibition or other means

"P" document published prior to the international filing date but later than the priority date claimed

"T" later document published after the international filing date or priority date and not in conflict with the application but cited to understand the principle or theory underlying the invention

"X" document of particular relevance; the claimed invention cannot be considered novel or cannot be considered to involve an inventive step when the document is taken alone

"Y" document of particular relevance; the claimed invention cannot be considered to involve an inventive step when the document is combined with one or more other such documents, such combination being obvious to a person skilled in the art.

"&" document member of the same patent family

Date of the actual completion of the international search	Date of mailing of the international search report
4 February 2010	12/02/2010

Name and mailing address of the ISA/	Authorized officer
European Patent Office, P.B. 5818 Patentlaan 2 NL – 2280 HV Rijswijk Tel. (+31-70) 340-2040, Fax: (+31-70) 340-3016	Waters, Duncan

INTERNATIONAL SEARCH REPORT

Information on patent family members

International application No
PCT/IB2009/054850

Patent document cited in search report	Publication date	Patent family member(s)	Publication date
WO 2006011113 A1	02-02-2006	CN 101019470 A	15-08-2007
		JP 2008507821 T	13-03-2008
		KR 20070044027 A	26-04-2007
		US 2008122386 A1	29-05-2008
US 2005062432 A1	24-03-2005	AU 2002356376 A1	30-07-2003
		CN 1615674 A	11-05-2005
		WO 03061352 A1	24-07-2003
		JP 2005515609 T	26-05-2005
US 2007182344 A1	09-08-2007	CN 1989790 A	27-06-2007
		WO 2006011075 A1	02-02-2006
		JP 2008507815 T	13-03-2008
		KR 20070044022 A	26-04-2007