April 2, 1968 C. SWARTZ 3,375,849

RAILROAD AIR HOSE CONNECTION

Filed Dec. 18, 1964

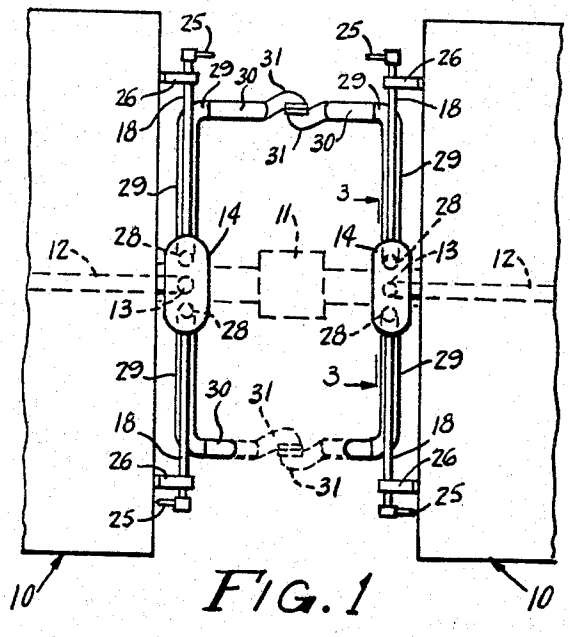

FIG. 1

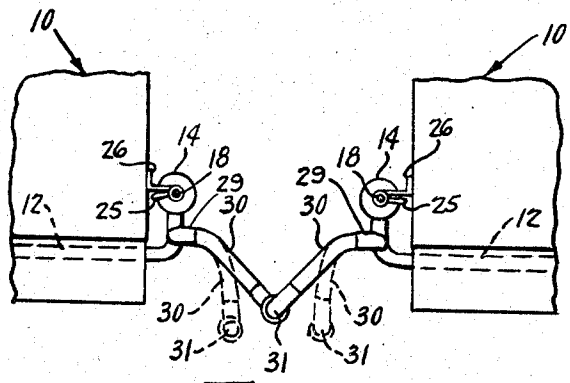

FIG. 2

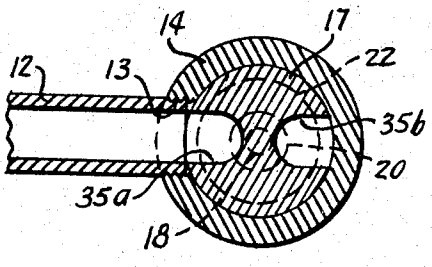

FIG. 4

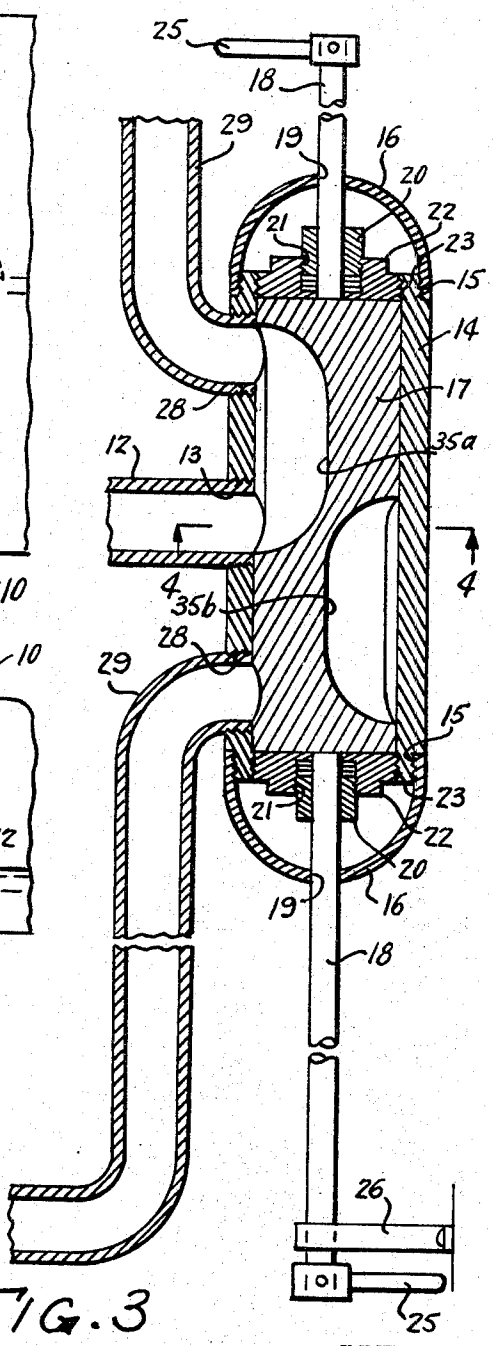

FIG. 3

INVENTOR.
CLARENCE SWARTZ

BY Kimmel, Crowell & Weaver
ATTORNEYS.

United States Patent Office 3,375,849 Patented Apr. 2, 1968

3,375,849

RAILROAD AIR HOSE CONNECTION

Clarence Swartz, Orient, Iowa 50858

Filed Dec. 18, 1964, Ser. No. 419,416
2 Claims. (Cl. 137—349)

This invention relates to a railroad air hose connection and has as its primary object the provision of a means and system for connecting the air hoses between adjacent railroad cars or the like, which will eliminate the necessity of the brakeman stepping between the cars when coupling the hose and the consequent possibility of injury.

An additional object of the invention is the provision of an assembled of this nature which may be readily connected to the conventional air line of a conventional railroad car, and applied thereto with a minimum of effort and difficulty.

A further object of the invention is the provision of an air hose assembly of this nature provided with a valve connection and dual hose lines, one on either side of the car, together with means for directing air from the main air line selectively into one or the other of the hoses.

A further object of the invention is the provision of a hose assembly of this nature wherein dual means are provided for controlling the supply of air, the control means being located adjacent each side of the car, so that regardless of the side from which the brakeman or other operator is working the supply of air to the connected hoses may be controlled from an immediately adjacent position.

A further object of the invention resides in the provision of an improved valve means in conjunction with the dual controls heretofore meantioned for directing the supply of air from the main air line into one or the other of the air coupling hoses.

Still other objects reside in the combinations of elements, arrangements of parts, and features of construction, all as will be more fully pointed out hereinafter and disclosed in the accompinying drawings wherein:

FIGURE 1 is a top plan view, partially schematic, showing a pair of adjacent coupled railroad cars supplied with the hose connection of the instant invention, one side thereof being coupled, and the other side being uncoupled;

FIGURE 2 is a side elevational view of the structure of FIGURE 1;

FIGURE 3 is an enlarged sectional view taken substantially along the line 3—3 of FIGURE 1 as viewed in the direction indicated by the arrows; and

FIGURE 4 is a sectional view taken substantially along the line 4—4 of FIGURE 3 as viewed in the direction indicated by the arrows.

Similar reference characters refer to similar parts throughout the several views of the drawing.

Having reference now to the drawings in detail, there are generally indicated at **10** fragments of two adjacent railroad cars, which are coupled in the usual manner by a conventional coupling **11**. Each car is provided with the usual longitudinally extending main air line **12**, the ends of which are normally coupled by a central hose. In accordance with the instant invention the main air line **12** at each end of each car threadedly engages an opening **13** in a terminal **14**, which consists of a tubular housing, having its end threaded at **15**, and fitted with dome shaped end caps **16**. A cylinder **17** is rotatable within the terminal **14**, and is of a diameter to afford a friction seal within the cylindrical housing. A shaft **18** extends from each end of the valve member, through an opening **19** in the dome shaped housing **16**, and through a sealing bushing **20** which is threaded into a central opening **21**

in an end plug **22** which is in turn threaded as at **23** into internal threads in the ends of terminal **14**.

At each end of the shaft **18** is an operating lever or handle **25**, which is positioned close to but spaced from the side of the car, so that the brakeman may reach the same without necessity of stepping between the cars. If desired a wheel may be substituted for lever **25**. Supporting brackets **26** positioned adjacent each side of each car serve to support the extending portions of the shaft **18**.

Terminal **14** is provided adjacent its opposite ends with a pair of threaded openings **28**, into which are sealingly engaged the ends of air hose pipes **29**, to the outer extremities of each of which is attached an air hose **30** provided with the usual coacting coupling member **31**.

The valve plug **17** is provided with two cutaway portions **35**, arranged on opposite sides thereof, and at opposite ends of the terminal **14**, the arrangement being such that when shaft **18** and plug **17** are turned by one of the wheels **25**, one cutaway portion or passageway communicates main air line **12** with the air pipe **29** on one side of the car, and when turned in the other direction throughout 180 degrees, the other cutaway portion communicates the main air line **12** with the other air pipe **29**. Obviously when the valve is turned through an angle of 90 degrees the main air supply from line **12** may be completely cut off when desired.

From the foregoing the use and operation of the device will now be readily apparent. When the cars are uncoupled the valve is turned to air line closing position. When it is desired to couple two adjacent cars **10** they are coupled in the usual manner through the coupling **11** and the brakeman then walks down one side of the train connecting the air hoses **30** through their couplings **31** on that side of the train. Each handle **25** is then rotated to a position where the coupled air house is supplied with air, while the uncoupled hose on the opposite side, indicated in dotted lines in FIGURES 1 and 2, remain shut off. By virtue of this arrangement it will be seen that the entire train may have its air supply coupled from either side thereof, without necessity of the brakeman or other individual coupling the train ever going between the cars.

From the foregoing it will now be seen that there is herein provided an improved railroad air hose connection which accomplishes all the objects of this invention, and others, including many advantages of great practical utility and commercial importance.

As many embodiments may be made of this inventive concept, and as many modifications may be made in the embodiment hereinbefore shown and described, it is to be understood that all matter herein is to be interpreted merely as illustrative and not in a limiting sense.

I claim:

1. In a railroad car air hose connection system wherein the railroad car includes a centrally disposed conduit extending the length thereof for carrying fluid therethrough and means at each end of the railroad car communicating with the conduit for connecting the conduit in communication with a similar conduit in an adjacent car, the improvement wherein the connection means comprises:

a combined valve and manifold housing having an inlet port secured in communication with the centrally disposed conduit and at least two outlet ports;

movable valve means in the housing, said valve means comprising a substantially solid, cylindrically shaped body having openings formed in the cylindrical surface thereof for selectively connecting only one of said outlet ports in communication with said inlet port;

oppositely extending operating shafts which extend to the respective sides of the railroad car;

leverage means on the end of the shafts adjacent the

respective edges of the car for permitting operating movement of the valve means from either side of the railroad car;

elongated conduits secured in communication with said outlet ports extending toward the respective sides of the railroad car;

flexible hoses secured in communication with the elongate conduits;

connecting means on the free ends of the flexible hoses for permitting selective interconnection of the free end of one hose individually or of both hoses to similarly disposed hoses on the respective sides of an adjacent railroad car, thereby permitting a continuous fluid conduit system to be completed among a plurality of cars by connecting only the flexible hoses on one side of said cars and operating said valve means from said side of the cars.

2. The invention of claim **1** wherein the combined valve and manifold comprises:

a tubular housing disposed generally laterally at the end of the railroad car having a central inlet port and outlet ports proximate the respective ends thereof, said inlet port being secured in communication with said centrally disposed conduit;

a cylindrical valve member received in the tubular housing, said valve member having therein oppositely directed openings for selectively permitting communication between the inlet port and only one outlet port;

means sealably mounting the valve member in the housing for rotatable movement therein; and

means securing the operating shafts to the respective ends of the cylindrical valve member.

References Cited

UNITED STATES PATENTS

1,204,176	11/1916	Mitchell	251—289
1,324,741	12/1919	Jones	137—349
1,876,918	9/1932	Gray et al.	137—349
2,159,906	5/1939	Montgomery	137—349
2,296,170	9/1942	Lockhart	137—349
2,319,347	5/1943	Reed	137—625.24
2,328,645	9/1943	Hughes	137—349
2,586,144	2/1952	Benoit	137—610 X
2,901,008	8/1959	Cavett et al.	137—614.06 X

M. CARY NELSON, *Primary Examiner.*

SAMUEL SCOTT, *Assistant Examiner.*