(12) INTERNATIONAL APPLICATION PUBLISHED UNDER THE PATENT COOPERATION TREATY (PCT)

(19) World Intellectual Property Organization
International Bureau

(43) International Publication Date
12 December 2024 (12.12.2024)

WIPO | PCT

(10) International Publication Number
WO 2024/252881 A1

(51) International Patent Classification:
F24H 1/20 (2022.01) *F24H 9/14* (2006.01)
F24H 4/04 (2006.01) *F24H 9/20* (2022.01)
F24H 9/02 (2006.01) *F25B 30/02* (2006.01)

(21) International Application Number:
PCT/JP2024/018078

(22) International Filing Date:
16 May 2024 (16.05.2024)

(25) Filing Language: English

(26) Publication Language: English

(30) Priority Data:
800730 08 June 2023 (08.06.2023) NZ

(71) Applicant: **RINNAI CORPORATION** [JP/JP]; 2-26, Fukuzumi-cho, Nakagawa-ku, Nagoya-shi, Aichi, 4540802 (JP).

(72) Inventors: **SENN David Charles**; c/o RINNAI NEW ZEALAND LIMITED, PO Box 53177, Auckland Airport, Auckland, 2150 (NZ). **GASCU Laurian**; c/o RINNAI NEW ZEALAND LIMITED, PO Box 53177, Auckland Airport, Auckland, 2150 (NZ).

(74) Agent: **KAI-U PATENT LAW FIRM**; NAGOYA LUCENT TOWER 9F, 6-1, Ushijima-cho, Nishi-ku, Nagoya-shi, Aichi, 4516009 (JP).

(81) Designated States *(unless otherwise indicated, for every kind of national protection available)*: AE, AG, AL, AM, AO, AT, AU, AZ, BA, BB, BG, BH, BN, BR, BW, BY, BZ, CA, CH, CL, CN, CO, CR, CU, CV, CZ, DE, DJ, DK, DM, DO, DZ, EC, EE, EG, ES, FI, GB, GD, GE, GH, GM, GT, HN, HR, HU, ID, IL, IN, IQ, IR, IS, IT, JM, JO, JP, KE, KG, KH, KN, KP, KR, KW, KZ, LA, LC, LK, LR, LS, LU, LY, MA, MD, MG, MK, MN, MU, MW, MX, MY, MZ, NA, NG, NI, NO, NZ, OM, PA, PE, PG, PH, PL, PT, QA, RO, RS, RU, RW, SA, SC, SD, SE, SG, SK, SL, ST, SV, SY, TH, TJ, TM, TN, TR, TT, TZ, UA, UG, US, UZ, VC, VN, WS, ZA, ZM, ZW.

(84) Designated States *(unless otherwise indicated, for every kind of regional protection available)*: ARIPO (BW, CV, GH, GM, KE, LR, LS, MW, MZ, NA, RW, SC, SD, SL, ST, SZ, TZ, UG, ZM, ZW), Eurasian (AM, AZ, BY, KG, KZ, RU, TJ, TM), European (AL, AT, BE, BG, CH, CY, CZ, DE, DK, EE, ES, FI, FR, GB, GR, HR, HU, IE, IS, IT, LT, LU, LV, MC, ME, MK, MT, NL, NO, PL, PT, RO, RS, SE, SI, SK, SM, TR), OAPI (BF, BJ, CF, CG, CI, CM, GA, GN, GQ, GW, KM, ML, MR, NE, SN, TD, TG).

(54) Title: HOT WATER SYSTEM WITH HEAT PUMP

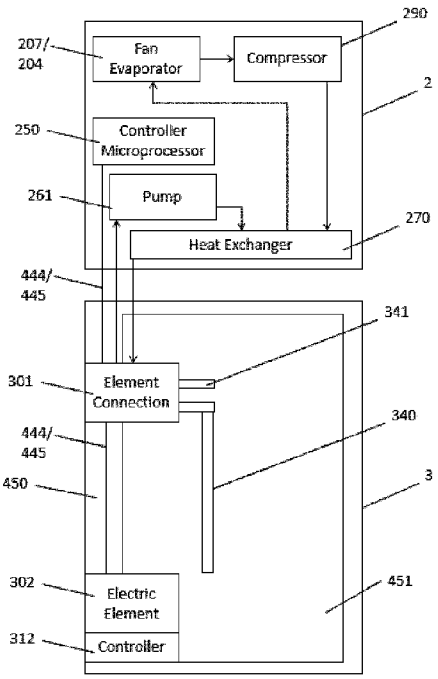

(57) Abstract: A hot water system comprising a heat pump and a storage portion. The hot water system being unitary or modular and configured to allow a user to easily connect and disconnect parts. A heat pump and heat exchanger for the hot water system, the heat pump comprising a base under which the heat exchanger is mounted and the heat exchanger comprising a spirally wound coil. The heat pump configured to sit on top of the storage portion. A method of controlling the heat pump and a heating element associated with the storage portion.

WO 2024/252881 A1

[Continued on next page]

Published:
— *with international search report (Art. 21(3))*

Description

Title of Invention: HOT WATER SYSTEM WITH HEAT PUMP

Technical Field

[0001] The present disclosure generally relates to heat pump hot water systems which use heat pumps to heat water stored in a tank. In part it relates to modular hot water systems where the heat pump can be optionally installed or removed from the hot water storage portion.

Background

[0002] With the global drive to limit dependence on fossil gas as an energy source, as well as reducing atmospheric emissions, there is increased interest in installing electric heat pump water cylinders. Integrated style heat pump water cylinders consist of a heat pump unit unitary with or mounted permanently on a storage tank. In some cases, integrated heat pump water heaters can replace an electric resistance storage water heater within the same footprint with a minimal impact on the typical installation cost. Indoor and outdoor models are available.

[0003] However, there are several attributes that limit uptake of these devices. The additional components can reduce durability, particularly for outdoor systems. Some systems have low efficiency ratings, particularly where the condenser coil is wrapped around the exterior of the hot water cylinder or immersed in the tank. This results in a low water side heat transfer coefficient (~200 W/m^2K) causing very poor heat transfer into the cylinder, and a high compressor discharge pressure, which can adversely affect efficiency, noise and/or durability. Systems may also be relatively noisy due to the air flow requirements.

[0004] It is the intention of the present invention to describe an integrated heat pump water heater that is designed for indoor and outdoor installation that substantially mitigates the above product limitations.

Summary of Invention

[0005] Aspects of the invention address one or more of the above problems by providing a dual module heat pump hot water system. The dual module system provides at least two options for an installer:

Installation of the entire system by plugging the top module into the tank module to complete the installation

Installation of the tank only with an option to upgrade by a later addition of the heat pump module.

The dual module system may ameliorate the bulky, heavy and high centre of gravity of previous systems, simplifying the installation process. This may also make service

of either the entire system, or a module of the system more practical. Splitting the system into two (or more) modules with a simple connection/ disconnection system allows the weight to be divided between the modules - in some cases this allows a maximum weight of each module to be no more than a standard hot water cylinder of equivalent storage capacity, for example between 50kg and 80kg, or 65kg. In some cases, a control system allows the storage tank to operate independently of whether the heat pump module is attached. This allows the tank module to be installed by the builder/ developer (lowest first cost) and the module to be conveniently added later, once the homeowner has taken possession of the property. In some cases, the system can be factory assembled and supplied as a single unit; this will be the lowest first cost option, by simplifying the tank electrics and retains many of the benefits that the modular design brings, including ease of servicing.

[0006] The prior art provides hot water cylinders with heat pump water heaters attached. However, it is advantageous to improve the configuration of the heat pump and the hot water tank to, for example improve the installation and reduce the size of the overall system.

[0007] In a first aspect the invention may broadly be said to consist in a modular hot water system comprising: A storage portion (3) comprising: A tank (451) configured to hold water, with at least two water connectors (321,323), An insulated housing (303) configured to surround the tank (451), and A heat pump mount on an upper surface (310) of the storage portion (3), A heat pump (2) comprising: A heat exchanger (270) configured to transfer heat between a refrigerant and water, A water flow path comprising: A water inlet (274), A water outlet (275), and A water pump (261) configured to circulate water between the water inlet (274), the heat exchanger (270) and the water outlet (275), A refrigerant flow path comprising: A compressor (290), An expansion valve (262), and An evaporator (280), Wherein the refrigerant flow path is configured to heat the refrigerant and transfer the heated refrigerant to the heat exchanger (270), and A mounting portion configured to reversibly mount the heat pump to the heat pump mount of the storage portion (3), Water conduits (211, 212) configured to extend between the at least two water connectors (321, 323) of the tank (451) and the inlet (274) and outlet (275) of the water flow path of the heat pump(2), the water conduits (211, 212) each comprising at least one reversibly connectable water conduit connector (213).

[0008] Advantageously the modular hot water system provides a system in which the heat pump and the storage portion can be easily connected and disconnect. This assists the installer and/or the engineer when working on the hot water system because the storage portion and the heat pump can be installed, or at least carried, separately. The modularity can be achieved by having a suitable mount on the storage portion to allow

the heat pump to be attached to the upper surface. The mount engages with a corresponding mounting portion of the heat pump. Advantageously this mounting is reversibly connectable so as to allow the heat pump to be removed, for instance for servicing. The water connections for transporting water between the storage portion and the heat pump are also reversibly connectable. This can be achieved by having a connector on the water conduits between the heat pump and the storage portion. In some cases, two water connections are present, a first water connection configured to transport water from the tank to the heat pump, and a second water connection configured to transport water from the heat pump back to the tank.

[0009] Optionally the water conduit connectors (213) are located between the upper surface (310) of the storage portion (3) and the base (470) of the heat exchanger (270) and/or disposed above the upper surface (310) of the storage portion (3) and outside the outer wall (205) of the heat pump (2). Optionally the water conduit connectors (213) is located beside an upper portion of storage portion (3) and below the base (470) of the heat exchanger (270). Optionally the water conduits (211, 212) extend through a base (470) of the heat pump (2), and the storage portion (3) further comprises: An opening (4) on the upper surface (310) of the storage portion (3), A passageway extending between the opening (4) and the water connectors (321,323), the opening (4) and the passageway configured to allow the water conduits (211, 212) to pass therethrough, wherein the water connectors (321,323) are accessible from the side of the insulated housing storage portion (3). Optionally the opening (4) comprises a lid (41). Optionally the water conduit connectors (213) are configured to connect to a tank connector (330) in or mounted to the storage portion (3).

[0010] The water conduits may be arranged in a variety of ways. For example, the water conduits may be permanently affixed to the heat pump, in particular to the water inlet and water outlet to the heat exchanger. The distal ends of these water conduits may have connectors configured to connect to the water inlet and water outlet of the storage portion. Alternatively, the water conduits may be permanently attached to the storage portion and may have connectors at their distal end configured to connect to the water inlet and water outlet of the heat pump. Alternatively, the water conduits may have connecters at both ends, to allow reversibly connection to the heat pump and/or storage portion in any order. Alternatively, water conduits may be permanently connected to both the heat pump and the storage portion, with the distal ends of the water conduits having connectors so as to allow the respective conduits to be connected. In some cases, additional connectors may be arranged on the water conduits between the heat pump and the storage portion. This may allow the initial installer to connect the conduits to their respective devices while providing an additional reversible connection point to be positioned in a useful location. This location may depend on the particular

installation location, for instance.

[0011] In some cases, the reversible connection is configured to locate in a particular location relative to the storage portion and/or heat pump. This ensures an appropriate location. For example, the connection may be arranged to locate above the upper surface of the storage portion. This means it is close to the heat pump for any connection to take place. The connection may locate within the housing of the heat pump, or outside the housing. The water conduits may connect to any point of the storage portion, with the length of the conduits configured to allow the reversibly connection to be made at the desired height. In a further example the reversible connection is located on or at the level of an upper portion of the side wall of the storage portion. The upper portion may be at least the upper 50% of the storage portion, at least the upper 40% of the storage portion, at least the upper 30% of the storage portion, or at least the upper 20% of the storage portion. In some case the connection may be aligned with a housing for an element connection. In some cases, the connection may be within the storage portion, for example between the tank side wall and an outer wall of the storage portion. Alternatively, the connection may be outside the storage portion. In some cases, the tank inlet and tank outlet are also located on the upper portion of the storage portion. In some cases, the tank inlet and tank outlet may be located elsewhere on the storage portion, with water conduits extending to the reversible connection.

[0012] In some cases, the storage portion comprises an opening. In some cases, the opening is on the upper surface of the storage portion. The opening provides an entry to a passageway to allow the water conduits to pass out of the storage portion. The passageway may comprise a recess in the insulation surrounding the tank configured to allow at the water conduits to pass therethrough. Extending the conduits through the housing can decrease heat loss in the system as well as protecting the water conduits from damage. In some cases, the opening is configured to also allow an electrical connection, such as cabling, to pass between the storage portion and the heat pump. The passageway may be formed through the insulated housing surrounding the tank. The passageway may extend to the water inlet/outlets of the tank. The reversible connectors may be arranged at a top or a bottom end of the passageway. A lid may be used to close the opening. The lid may be reversibly closable and/or have a closure such as a latch to secure the lid in the closed and/or open position.

[0013] Optionally the heat pump (2) further comprises a heat pump controller (253), wherein the controller (253) is configured to control the refrigerant flow path and the water flow path, Wherein the storage portion (3) further comprises an electrical element (311) and an element controller (312), wherein the element controller (312) is configured to control activation of the electrical element (311), Wherein the heat pump

controller and the element controller are configured to be electrically connectable by at least one electrical connection (44,45), the electrical connection comprising at least one reversibly connectable electrical connector (444, 445). Optionally the element controller (312) is configured to connect to mains electricity, and wherein the element controller (312) is configured to heat the water in the tank (451) independently when the element controller (312) is disconnected from the heat pump controller (253). Optionally the storage portion (3) further comprises: An opening (4) on the upper surface (310) of the storage portion (3) and A lid (41) to cover the opening (4), Wherein in a disconnected position a portion of the electrical connection including at least one reversibly connectable electrical connector (444, 445) is configured to be storable below the lid (41) of the opening (4), and in a connected position at least one of the reversibly connectable electrical connectors are located above the opening (4) and are electrically connectable to the heat pump controller.

[0014] In some cases, the heat pump comprises a controller configured to control the operation of the refrigerant flow path and the water flow path. The storage portion may comprise an element, including an electric element such as an immersion element or a heating element. The element is used to heat up water in the tank. This may be as an alternative to the use of the heat pump, or in connection with the heat pump. The element may have an element controller. The heat pump controller and the element controller may be electrically connected. The electrical connection allows control signals to be transmitted between the controllers. For example, this allows the activation of the element to be blocked when the heat pump is operational. The electrical connection may be through one or more electrical cables and/or harnesses. The electrical connection may have one or more electrical connectors. The electrical connectors are preferably reversibly connectable so as to allow the heat pump and storage portion to be reversibly connected. The reversibly connection may be implemented by connectors on the electrical cables and/or terminal blocks.

[0015] In some cases, the element controller is configured to operate independently when the electrical connection is disconnected and/or when the Heat pump controller is inactive. This means that where only the storage portion is present, or where the heat pump is inoperative, the element is configured to heat water in the storage portion.

[0016] The electrical connection may comprise a first portion connected to the storage portion and a second portion connected to the heat pump. The electrical connectors between the first and second portion may be positioned at or near the top of the storage portion and at or near the bottom of the heat pump. In some cases, the opening may be configured so that the first portion extends through the opening in a first position and is contained in the opening in a second position. The first portion may be configured to be stored inside the second or stored portion. The opening may have a protrusion to

support the electrical connectors in the stored position. In the first position the connection can be made to the second portion, while in the second position the heat pump may be removed.

[0017] Optionally the heat pump (2) further comprises at least one handle (201), wherein the at least one handle (201) is accessible when the heat pump (2) is mounted on the storage portion (3). Optionally the heat pump (2) further comprises: A base (470), and An outer wall (205) that surrounds the refrigerant flow path, the heat exchanger (270) and the water flow path, wherein the evaporator (280) is disposed above the base (470), the evaporator extending up outer wall (205) and extending around an inner surface of the outer wall (205) to cover a first portion of the outer wall, wherein the outer wall (205) further comprises plurality of apertures on the first portion of the outer wall, wherein the handle (201) is disposed below the plurality of apertures and is configured to support the base (470). Optionally the heat pump (2) further comprises: A base (470), An outer wall (205) that surrounds the refrigerant flow path, the heat exchanger (270) and the water flow path, and An impeller (404), wherein at least the evaporator (280) and the impeller (404) are disposed above the base (470), Wherein the evaporator extends up outer wall (205) and extends around at least a portion of an inner surface of the outer wall (205), and Wherein the impeller (404) comprises rotation shaft extending in an upwards direction relative to the base and is at least partially surrounded by the evaporator (280).

[0018] Optionally the storage portion (3) and the heat pump (2) further comprise a guide portion, the guide portion configured to align the heat pump mounting portion and the heat pump mount in use. Optionally the guide portion comprises: A lip (320) along at least part of peripheral of the upper surface of the storage portion (3), and A flange (216) along at least part of the periphery of the heat pump (2), the flange (216) configured to mate with the lip(320). Optionally the storage portion (3) and the heat pump (2) have substantially the same outline in horizontal cross-section.

[0019] In some cases, the heat pump has at least one handle configured to allow a user to lift off the heat pump from the storage portion. The handle may be protruded or recessed. There may be a plurality of handles, with at least one recessed handle at the front of the heat pump and two protruding handles towards the back of the heat pump. The handle may be arranged on a portion of the outer wall below the base of the heat pump. This position allows the handles to lift the base while not interrupting the outer wall surrounding the evaporator.

[0020] The evaporator may extend up the outer wall of the heat pump and extend over at least a portion of the inner surface of the outer wall. A larger extension allows a greater evaporator area. Having the impeller partially encircled by the evaporator allows for high air flow, and optionally a slow impeller speed. A guide portion is configured to

align, or approximately align the heat pump on the mounting portion. The guide portion may form part of the mounting portion. The guide portion may have some tolerance to allow adjustment of the heat pump. The guide portion may be formed by a lip on the storage portion and a flange on the heat pump, or vice versa. The evaporator may have fins, or a finned portion to improve heat transfer.

[0021] In a further aspect the invention may broadly be said to consist in a modular hot water system comprises: A storage portion (3) comprising: A tank (451) configured to hold water, with at least two water connectors (321,323), An insulated housing (303) to substantially surround the tank (451), and A heat pump mount on an upper surface (310) of the storage portion (3), A heat pump (2) comprising: A heat exchanger (270) configured to transfer heat between a refrigerant and water, A water flow path comprising: A water inlet (274), A water outlet (275), and A water pump (261) configured to circulate water between the water inlet (274), the heat exchanger (270) and the water outlet (275), A refrigerant flow path comprising: A compressor (290), An expansion valve (262), and An evaporator (280), Wherein the refrigerant flow path is configured to heat the refrigerant and transfer the heated refrigerant to the heat exchanger (270), A mounting portion configured to reversibly mount the heat pump (2) to the heat pump mount, Water conduits (211, 212) configured to extend between the at least two water connectors (321, 323) and the inlet and outlet of the water flow path of the heat pump (2), the water conduits (211, 212) each comprising a reversibly connectable connector (213), and wherein the heat exchanger (270) comprises a horizontal coil (271) and is located below the compressor (290), expansion valve (262) and the evaporator (280).

[0022] A heat exchanger with a horizontal coil located below the compressor, expansion valve and evaporator allows a compact heat pump with a large area available for the evaporator. The water connections from the water pump and/or evaporator are also minimised in length because they can run directly through the base to the heat exchanger. A single layer of the horizontal coil reduces the height of the unit, while a triple layer tube provides heat transfer. Sandwiching the layers between the first and second layers protects the heat exchanger and allows servicing. Brackets allow removal of the insulation. Improved heat transfer can be achieved where the inner tube of the heat exchanger is wider than the inlet and/or outlet of the refrigerant flow path to slow the refrigerant flow through the exchanger tube. Thermal performance may be achieved by a gap between the turns of the winding and/or using insulation to maintain the gap between the turns.

[0023] Optionally the heat exchanger (270) comprises a triple layer tube structure, wherein refrigerant flows between an inner surface of an outer tube and an outer surface of an intermediate wall, and water flows through an inner tube, and wherein the heat

exchanger coil (271) comprises a single layer of the triple layer tube structure. Optionally the inner tube comprises an inner wall, the inner wall comprising a plurality of ridges and troughs. Optionally at least one of the storage portion (3) or the heat pump (2) are substantially cylindrical, and the horizontal coil comprises a central axis that substantially corresponds with the axial axis of the storage portion (3) and/or the heat pump (2), wherein the external diameter of the heat exchanger (270) is smaller than the external diameter of the storage portion (3) and/or the heat pump (2).Optionally the heat pump (2) comprises first and second insulation layers (272), wherein the heat exchanger (270) is sandwiched between the first and second insulation layers (272).

[0024] Optionally the heat exchanger (270) and the insulation layers (272) are secured below the refrigerant flow path by one or more brackets (279). Optionally the cross-sectional area of a conduit in the refrigerant flow path connected to the heat exchanger (270) is smaller than the cross-section area of the inner tube of the heat exchanger (270), optionally wherein the refrigerant is propane. Optionally the horizontal coil (271) comprises a gap between adjoining turns. Optionally the heat exchanger comprises insulation (272), the insulation (272) configured to maintain the gap between adjoining turns.

[0025] In a further aspect the invention may broadly be said to consist of A modular hot water system comprising: A storage portion (3) comprising: A tank (451) configured to hold water, with at least two water connectors (321,323), An insulated housing (303) to substantially surround the tank (451), An electrical element (311), An element controller (312) configured to control the operation of the electrical element (311), and a heat pump mount on an upper surface (310) of the storage portion (3), A heat pump (2) comprising: A heat exchanger (270) configured to transfer heat between a refrigerant and water, A water flow path comprising: A water inlet (274), A water outlet (275), and A water pump (261) configured to circulate the water between the water inlet (274), the heat exchanger (270) and the water outlet (275), A refrigerant flow path comprising: A compressor (290), An expansion valve (262), and An evaporator (280), Wherein the refrigerant flow path is configured to heat the refrigerant and transfer the heated refrigerant to the heat exchanger (270), A mounting portion configured to reversibly mount the heat pump to the heat pump mount of the storage portion (3), Water conduits (211, 212) configured to extend between the at least two water connectors (321, 323) and the inlet and outlet of the water flow path of the heat pump, the water conduits (211, 212) each comprising a reversibly connectable connector (213), and Wherein the element controller (312) comprises an operation management system configured to allow or prevent operation of the electrical element (311).

[0026] Configuring the operation management system to prevent operation of the electrical element prevents concurrent operation of the heat pump and electrical element. The

operation management system may comprise a program or set of instructions or methods that the controller undertakes or is programmed to undertake. This operation management system may monitor operation of the heat pump, for example by using a relay, to operate when the heat pump is not working. In some situations, the heat pump may instruct the controller to operate the electrical element at the same time as the heat pump, for example to increase heating performance, or where the heat pump inlet temperature is too low, such as -25 Celsius or where defrosting is desired. Detection of the heat pump may be electrical, or through a switch (such as a relay) or sensor on the top of the storage portion. The electrical detection may be through a power usage of the heat pump being below a threshold value. In some cases, the controller may receive signals from the heat pump controller. The signals may allow power to the element controller and/or prevent power to the element controller. In some cases, the power may pass through the heat pump controller. In some cases, the heat pump controller may monitor the power passing to the element controller. The controller may balance the desire to operate the heat pump for efficiency and the need to use the electrical element for certain operations. The controller may consider the relative temperatures or operating requirements of the heat pump and or heating element to ensure suitable operation. The operation management system may use temperature inputs (ambient and/or tank) to control the operation of the system. The operation management system may be located in a controller of the heat pump or the storage portion. When in the heat pump it may use relays to control the operation of the element controller.

[0027] Optionally the heat pump comprises a heat pump controller (253) configured to electrically connect to the element controller (312), Wherein the operation management system is configured to allow operation of the electrical element (311) on receiving an error signal indicating malfunction of the heat pump (2). Optionally the heat pump comprises a heat pump controller (253) configured to electrically connect to the element controller (312), Wherein the operation management system is configured to allow operation of the electrical element (311) on receiving a permission signal indicating permission for operation of the heat pump (2). Optionally the storage portion (3) further comprises a detection switch configured to detect if the heat pump is correctly mounted on the heat pump mount, Wherein the operation management system is configured to allow operation of the electrical element (311) when the heat pump (2) is not detected as correctly mounted on the heat pump mount. Optionally the heat pump comprises a heat pump controller (253) configured to electrically connect to the element controller (312) through power supply cables (45), wherein the heat pump receives mains power via the element controller (312), Wherein the operation management system is configured to allow operation of the electrical element (311) when the element controller (312) detects the heat pump's electric consumption is

lower than a threshold value. Optionally the heat pump comprises an ambient temperature sensor configured to detect an ambient temperature, Wherein the operation management system is configured to allow operation of the electrical element (311) when the ambient temperature sensor detects the ambient temperature is lower than a threshold value. Optionally the heat pump is configured to operate defrosting cycle to melt frost deposit on the evaporator, wherein the operation management system is configured to allow operation of the electrical element (311) when the heat pump operates the defrosting cycle.

[0028] In a further aspect the invention may broadly be said to consist in a hot water system comprising: A storage portion comprising: A tank configured to hold water, the tank comprising a wall and an opening through the wall; and An insulated housing surrounding the tank, A heat pump configured to heat the water from the tank, the heat pump configured to draw water through an inlet flow path conduit in fluid connection with the tank and discharge water through an outlet flow path in fluid connection with the tank, Wherein the inlet flow path and outlet flow path pass through the opening through the wall.

[0029] By connecting the inlet and outlet flow paths through the same opening in the wall of the tank the connection and/or disconnection of the heat pump is simplified. The inlet flow path may comprise one or more of: a conduit within the tank, a connector in the wall of the tank and a conduit outside of the tank. Similarly, the outlet flow path may comprise one or more of: a conduit within the tank, a connector in the wall of the tank and a conduit outside of the tank.

[0030] Optionally the inlet flow path and outlet flow paths are configured to pass through a mount in the side wall of the tank. Optionally the mount is configured to alternatively receive a secondary heating element.

[0031] The repurposed use of a secondary heating element mount enables the heat pump to interface with a range of known tanks, as well as allowing the tank to fit known means of connection and sealing methods. Alternatively, the tank may have a fixed tank connector.

[0032] Optionally the inlet flow path comprises an inlet conduit extending between the heat pump and the storage portion and the outlet flow path comprises an outlet conduit extending between the heat pump and the storage portion. Optionally comprising a tank connector, the tank connector mountable to the mount, wherein the tank connector comprises: a first opening configured to fluidly connect the inlet conduit to the tank; and a second opening configured to connect the outlet conduit to the tank. Optionally the tank connector comprises a third opening configured to allow a sensor within the tank. Optionally the tank connector is removably mountable to the mount. Optionally comprising a seal between the tank connector and the mount. Optionally the tank

connector is a flange, optionally a four-bolt flange. Optionally tank connector comprises: an inlet connector on the first opening, the inlet connector reversibly connectable to the inlet conduit; and/or an outlet connector on the second opening, the outlet connector reversibly connectable the outlet conduit. Optionally the tank connector comprises at least one tube connector, the tube connector configured to connect to a tube inside the tank. Optionally the tube connector comprises an inlet connected, or configured to connect to, a dip tube. Optionally the dip tube extends towards the bottom and/or top of the tank and/or wherein the dip tube extends towards the top of the tank. Optionally the dip tube extends to at least the bottom 50%, bottom 40%, bottom 30%, bottom 20% or bottom 10% of the tank, alternatively wherein the dip tube extends to at least the top 50%, top 40%, top 30%, top 20%, or top 10% of the tank. The direction will depend on the desired intake or outlet of water. Optionally the tank connector comprises a third opening, the third opening configured to allow a sensor to pass therethrough. Optionally further comprising a sensor pocket configured to seal to the third opening, the sensor pocket configured to support the sensor.

[0033] Optionally comprising a removable cap on the first and/or second openings. Optionally the inlet conduit and/or and outlet conduit are to extend inside the insulated housing between the opening and the top of the tank. Optionally the insulated housing comprises a passageway configured to allow the inlet conduit and outlet conduit to extend inside the housing. Optionally comprising an electrical heating element configured to heat the water in the tank. Optionally comprising an upper opening on the upper surface of the storage portion, the opening configured to allow the inlet conduit and outlet conduit to pass therethrough. Optionally the upper opening is substantially directly above the opening through the wall of the tank. Optionally comprising a pathway for the inlet and outlet water conduits between the opening in the tank wall and the upper opening. Optionally the upper opening comprises a lid, the lid configured to reversible cover the upper opening. Optionally the lid forms part of the upper surface of the storage portion, when closed. Optionally the lower surface of the heat pump has a space configured to allow the lid to open when the heat pump is mounted on the storage portion.

[0034] Optionally further comprising an electrical connection between the tank and the heat pump, optionally wherein the electrical connection reversibly connectable. Optionally the electrical connection extends through the passageway. Optionally the electrical connection comprises at least one hand-connectable and/or disconnectable plug. Optionally the inlet conduit and the outlet conduit are disconnectable from the tank.

[0035] In a further aspect the invention may be said to broadly consist in a hot water system comprising: A storage portion comprising: A tank configured to hold water, the tank comprising a wall and an opening through the inner wall, the opening comprising a

mount; and An insulated housing surrounding the tank, and A tank connector reversibly connectable to the mount, the tank connector comprising a first opening configured to provide a fluid connection between an inlet conduit and the tank, and a second opening configured to provide an fluid connection between an outlet conduit and the tank, wherein the inlet conduit and the outlet conduit are connectable to a heat pump. The tank connector allows simple attachment to a mount and enables inlet and outlet connections to be made to the tank. The tank connector may allow easy reversible connection between a heat pump portion and the storage portion of an integrated heat pump water heater without the use of specialized tools. This modular arrangement allows maximum flexibility in the supplied and installed configuration of the water heater.

[0036] In a further aspect the invention may be said to broadly consist in a hot water system comprising: a storage portion comprising: A tank configured to hold water the tank comprising a wall and an opening through the wall; and An insulated housing surrounding the tank, and A heat pump configured to heat the stored water, The heat pump comprising a water inlet conduit and a water outlet conduit, wherein the water inlet conduit and water outlet conduit and reversibly connectable to the storage portion at the opening through the wall.

[0037] Optionally the inlet flow path and outlet flow path pass through the opening through the inner wall. Optionally comprising a tank connector configured to mount in the opening of the storage portion and fluidly connect the water inlet conduit and the water outlet conduit to the tank.

[0038] In a further aspect the invention may be said to broadly consist in A tank connector for a hot water system comprising a heat pump and a storage potion comprising a tank, the tank connector comprising: A first opening configured to fluidly connect a water inlet conduit to the tank, and A second opening configured to fluidly connect a water outlet conduit to the tank, Wherein the tank connector is configured to be mounted on the storage portion.

[0039] Optionally the tank connector is configured to mount to a heating element mount on the storage portion. Optionally the tank connector comprises a third opening configured to allow a sensor to pass into the tank. Optionally the first opening and/or second opening comprise connectors to connect to the water inlet conduit and/or the water outlet conduit, wherein the connectors are orientated at different angles, optionally wherein the connectors are perpendicular to one another. Optionally comprising a dip tube configured to connect to the first and/or the second opening, optionally comprising a tube connector connected between the opening and the dip tube. Optionally the tank connector is a flange, optionally a four-bolt flange.

[0040] In a first aspect the invention may broadly be said to consist in a heat pump for hot

water system comprising: A heat pump base configured to support: a compressor configured to circulate refrigerant; an evaporator configured to heat the refrigerant; a water pump configured to circulate water through the heat pump; and an impeller to circulate air through the evaporator; and A heat exchanger mounted beneath the heat pump base, the heat exchanger comprising a spirally wound heat transfer tubing assembly.

[0041] The use of a flat spiral coil provides a low-profile heat exchanger or condenser allowing the heat pump to have a low profile and a large evaporator area. The heat transfer tubing assembly may comprise a heat transfer tube, or alternative a non-coaxial form of heat transfer. For example, the heat exchanger tubing assembly could comprise two tubes brazed together, and then spirally would, with the refrigerant and water flowing through respective tubes.

[0042] Optionally the heat transfer tubing assembly comprises at least two windings in substantially the same layer. Optionally the heat transfer tubing assembly has at least two walls between a refrigerant flow path and a water flow path. Optionally the heat transfer tubing assembly comprises at least four windings. Optionally all the windings of the heat transfer tubing assembly are in substantially the same layer. Optionally the heat pump water heater is mounted, or mountable on a hot water tank. Optionally the heat pump is reversibly attachable to the storage portion. Optionally the heat pump and the storage portion are co-axial when mounted. Optionally the diameter of the heat pump water heater is substantially equal to the diameter of the storage portion. Optionally wherein the diameter of the heat exchanger is less than or equal to the diameter of the hot water tank. Optionally the heat transfer tubing assembly is co-axially aligned with the longitudinal axis of the hot water tank.

[0043] Optionally the spirally wound heat transfer tubing assembly is less than 50 mm thick, preferably less than 20 mm thick, preferably less than 10 mm thick. Optionally the heat transfer tubing assembly comprises a heat transfer tube comprising an inner wall, the inner wall having a spiral groove or protrusion configured to improve heat transfer. Optionally the portion of the heat transfer tube within the inner wall is configured to transport water and an outer portion of the heat transfer tube is configured to transport refrigerant. Optionally wherein the refrigerant is propane or carbon dioxide, optionally wherein there is less than 152 grams of propane. Optionally the heat transfer tubing assembly is encased in insulation. Optionally the insulation comprises a plurality of interlocking insulation sections. Optionally the heat exchanger is mounted below the heat pump with brackets. Optionally comprising a cylindrical housing around the heat pump water heater.

[0044] Optionally the heat pump base is moulded plastic. Optionally the heat pump base comprises one or more protrusions or recesses configured to align one or more

components of the heat pump. Optionally the heat pump base as protrusions or recesses for location and/or securing of any one or more of: One or more compressor mounts; A divider; The evaporator, a flange of the evaporator or a finned portion of the evaporator; and/or A water pump. Optionally the heat pump base comprises a condensate channel leading to a drain, optionally wherein the condensate channel extends around a periphery of the heat pump, optionally wherein the channel has a single drain or outlet. Optionally the evaporator extends along a perimeter of the heat pump base. Optionally the axis of the impeller is parallel to the longitudinal axis of the heat pump, the impeller located within the perimeter of the evaporator.

[0045] Optionally comprising a divider configured to separate the impeller evaporator and impeller from the compressor. Optionally the divider comprises a metal sheet. Optionally the divider comprises multiple portions, each portion configured at a different angle, optionally wherein the divider is shaped to maximise the space available for a vertical axis impeller. Optionally the divider is configured to substantially separate a compressor portion from an impellor portion of the heat pump. Optionally the divider is configured to substantially seal between the compressor portion and the impellor portion. Optionally comprising at least one handle, optionally wherein the handle protrudes from or is recessed into the heat pump, optionally comprising at least two handles. Optionally wherein the at least one handle is accessible when the heat pump is mounted on the storage portion, optionally wherein the at least two of the at least handles are accessible. Optionally wherein the at least one handle is located at or near the base of the heat pump.

[0046] Optionally comprising a controller, the controller configured to receive user inputs and control the operation of the heat pump. Optionally the controller is configured to determine if the compressor is operating and transmit a signal. Optionally comprising a removable cover, the removeable cover preventing access to the internal components of the heat pump. Optionally comprising a water inlet conduit and water outlet conduit, the conduits extending from the heat pump and configured to be connectable to a hot water tank. Optionally comprising a mounting portion, the mounting portion configured to reversibly mount the heat pump to a hot water tank. Optionally wherein the heat pump base comprises mounts, such as feet, the mounts configured to support the heat pump base on a surface. Optionally wherein the mounting portion comprises a flange configured to secure the heat pump on a lip of a hot water tank. Optionally comprising a guide portion, the guide portion configured to align the heat pump when the heat pump is mounted on a hot water tank. Optionally the mounting portion comprises the guide portion. Optionally the guide portion comprises a protrusion or recess on the lower surface of the heat pump.

[0047] In a further aspect the invention may be said to broadly consist in a heat exchanger

for a hot water heat pump, the heat exchanger comprising: a heat transfer tube wound with at least two windings in substantially the same layer.

[0048] The use of a flat spiral coil provides a low provide heat transfer coil or condenser allowing the heat pump to have a low profile and a large evaporator area.

[0049] Optionally the heat transfer tube has at least two walls. Optionally comprising at least four windings Optionally all the windings of the heat transfer tube are in substantially the same layer. Optionally the width of the heat exchanger is less than or equal to the diameter of the heat pump water heater. Optionally the heat exchanger is co-axially aligned with the longitudinal axis of the heat pump. Optionally the layer is less than 50 mm thick, preferably less than 20 mm thick, preferably less than 10 mm thick. Optionally the layer is substantially the thickness of the heat transfer tube. Optionally the heat transfer tube comprises an inner wall having a spiral groove or protrusion configured to improve heat transfer. Optionally the portion of the heat transfer tube within the inner wall is configured to transport water from the hot water cylinder. Optionally an outer portion of the heat transfer tube is configured to transport refrigerant from the heat pump. Optionally the refrigerant is propane or carbon dioxide, optionally wherein there is less than 152 grams of refrigerant. Optionally the heat exchanger comprises insulation surrounding the heat transfer tube. Optionally wherein the insulation separates adjacent tube windings. Optionally wherein the insulation comprises a plurality of interlocking panels.

[0050] In a further aspect the invention may be said to broadly consist in a heat pump for a hot water system, the heat pump comprising a heat exchanger as described in any one of the other aspects. Optionally the heat exchanger is arranged below the base of the heat pump. Optionally the heat exchanger is encased in insulation. Optionally the insulation comprises a plurality of interlocking sections. Optionally the heat exchanger is mounted to the heat pump base, optionally with brackets. Optionally the heat pump is configured to sit on top of a storage portion of the hot water system. Optionally the heat pump is configured to be reversibly attachable to the hot water system. Optionally the heat pump and the hot water system are co-axial. Optionally the heat pump housing forms a cylinder, and the hot water system comprises a hot water cylinder. Optionally the diameter of the heat pump cylinder is substantially equal to the diameter of the hot water system. Optionally heat pump comprising a base, the heat exchanger and one or more heat pump components mountable to the base, optionally wherein the base comprises one or more projections or recesses configured to mount the heat pump components.

[0051] Optionally the base is moulded plastic. Optionally comprising an evaporator. Optionally the evaporator is located above the heat exchanger. Optionally the evaporator extends along a perimeter of the heat pump. Optionally comprising an impeller

configured to generate air flow through and/or around the evaporator. Optionally the impeller is arranged parallel to the longitudinal axis of the heat pump, the impeller located within the curved perimeter of the evaporator.

[0052] Optionally comprising a compressor and a divider configured to separate an impeller portion of the heat pump from a compressor portion of the heat pump. Optionally the divider comprises a metal sheet. Optionally the divider comprises multiple portions, each portion configured at a different angle. Optionally comprising at least one handle, optionally wherein the handles are located at or near the base of the heat pump.

[0053] Optionally comprising a controller, the controller configured to receive user inputs and control the operation of the heat pump. Optionally the controller is configured to determine if a compressor is operating and transmit a signal. Optionally comprising a flange configured to secure the heat pump on a hot water system. Optionally the heat pump comprises a mount configured to secure the heat pump to one or more of the hot water systems, a bracket and/or a level surface. Optionally comprising a removable cover, the removeable cover preventing access to the internal components of the heat pump. Optionally comprising water inlet and water outlet conduits, the conduits extending from the heat pump and configured to be connectable to the storage portion.

[0054] In a further aspect the invention may be said to broadly consist in a control system for a hot water system comprising a heat pump with a controller and a storage portion with a heating element, the control system comprising: A relay operatively controlled by the heat pump controller and connected to a heating element controller, Wherein the heat pump controller is configured to operate the relay to prevent operation of the heating element controller when electrically connected.

[0055] Optionally the relay is normally closed, and the heat pump controller is configured to open the relay when the heat pump is electrically connected. Optionally the relay automatically opens when no signal is received from the heat pump controller. Optionally the relay is connected between the power line and the heating element controller. Optionally comprising a second relay, the second relay configured to allow power to flow from the heat pump to the heating element controller, the second relay controlled by the heat pump controller. Optionally the heat pump controller is configured to monitor the power flow to the heating element controller. Optionally the heat pump controller is configured to activate the heating element controller in a defrost mode and/or wherein the ambient temperature is below a threshold. Optionally comprising a temperature sensor to provide an ambient temperature measurement to the heat pump controller. Optionally the control system is configured to only allow one of the heat pumps and/or the heating element to operate at any given time. Optionally the heat element controller comprises a thermostat.

[0056] In a further aspect the invention may be said to broadly consist in a method for con-

trolling a modular hot water system comprising a heat pump and a storage portion comprising a heating element, the heating element coupled to input power through a normally closed relay: Opening the relay based on an on a signal from the heat pump, wherein the on signal is activated when the heat pump receives power, and Closing the relay based on the lack of a signal from the heat pump. Optionally the heat pump and the heating element cannot operate concurrently. In some cases, a dual module configuration allows standalone operation of the storage module without any manual operation. Simply mounting and connecting the heat pump module to the storage module, ensures de-energization of the electric heating element and automatic operation of the heat pump. In other cases, the heat pump can be used in a remote configuration with a standard hot water system.

[0057] Optionally the heating element is an electric immersion heater. Optionally the system comprises an alternative power source for the heating element through the heat pump, the method comprising the step of providing power to the heating element through the heat pump and monitoring the power supplied. Optionally comprising the step of comparing a measured temperature to a threshold temperature and supplying power to the heating element when the temperature is below a threshold temperature. Optionally the measured temperature is an ambient temperature.

[0058] Features from one or more embodiments or configurations may be combined with features of one or more other embodiments or configurations. Additionally, more than one embodiment or configuration may be used together in a heat pump during a process of heating water in a hot water system.

[0059] As used herein the term “(s)” following a noun means the plural and/or singular form of that noun.

[0060] As used herein the term “and/or” means “and” or “or”, or where the context allows both.

[0061] The term “comprising” as used in this specification means “consisting at least in part of”. When interpreting each statement in this specification that includes the term “comprising”, features other than that or those prefaced by the term may also be present. Related terms such as “comprise” and “comprises” are to be interpreted in the same manner.

[0062] It is intended that reference to a range of numbers disclosed herein (for example, 1 to 10) also incorporates reference to all rational numbers within that range (for example, 1, 1.1, 2, 3, 3.9, 4, 5, 6, 6.5, 7, 8, 9 and 10) and also any range of rational numbers within that range (for example, 2 to 8, 1.5 to 5.5 and 3.1 to 4.7) and, therefore, all sub-ranges of all ranges expressly disclosed herein are hereby expressly disclosed. These are only examples of what is specifically intended and all possible combinations of numerical values between the lowest value and the highest value enumerated are to be

considered to be expressly stated in this application in a similar manner.

[0063] This disclosure may also be said broadly to consist in the parts, elements and features referred to or indicated in the specification of the application, individually or collectively, and any or all combinations of any two or more said parts, elements or features.

[0064] Where specific integers are mentioned herein which have known equivalents in the art to which this disclosure relates, such known equivalents are deemed to be incorporated herein as if individually set forth.

[0065] The disclosure consists in the foregoing and also envisages constructions of which the following gives examples only.

Brief Description of Drawings

[0066] Specific embodiments and modifications thereof will become apparent to those skilled in the art from the detailed description herein having reference to the figures that follow, of which:

[0067] Fig. 1 shows a diagrammatic view of the hot water system.

[0068] Fig. 2 shows a modular hot water system with a heat pump with hot water storage portion.

[0069] Fig. 3 shows the heat pump module from Fig. 2.

[0070] Fig. 4a, 4b and 4c show a base of a heat pump module in a) plan view and b) isometric view and c) an impeller mount for the base of Fig. 4a and 4b.

[0071] Fig. 5 shows the heat pump module from Fig. 2 with the cover removed.

[0072] Fig. 6 shows the heat pump module from Fig. 2 in an exploded view showing the insulation and the heat transfer tube.

[0073] Fig. 7 shows the heat pump module from Fig. 2 in an exploded view showing the control panel.

[0074] Fig. 8 shows detail of the electrical harnesses and water conduits of Fig. 7.

[0075] Fig. 9 shows the detail of the water flow path of the heat pump of Fig. 7.

[0076] Fig. 10 shows a 3D view of a first side of the heat pump.

[0077] Fig. 11 shows a side view of the heat pump of Fig. 2 with a cut away to show the impeller.

[0078] Fig. 12a shows a storage portion with a dashed line showing a tube inside the tank.

[0079] Fig. 12b shows an upper element mount on the storage portion of Fig. 12a.

[0080] Fig. 12c shows an upper element mount on the storage portion of Fig. 12a.

[0081] Fig. 12d shows a lower element mount on the storage portion of Fig. 12a.

[0082] Fig. 12e shows an opening with a lid on the upper surface of the storage potion of Fig. 12a.

[0083] Fig. 12f shows the openings and lid of Fig. 12e with the electrical harnesses

connected.

[0084] Fig. 13 shows elements of the heat pump of Fig. 2 in connection with a tank connector.

[0085] Fig. 14 shows an exploded view of the tank connector.

[0086] Fig. 15a shows an attachment of a water conduit to the tank connector.

[0087] Fig. 15b shows the installed water connector to the tank connector with a cut away to show the connection.

[0088] Fig. 16 shows an integrated heat pump and storage portion.

[0089] Fig. 17a and 17b shows alternative arrangements for the insulation around the heat exchanger between the heat pump and the storage portion for a) a modular system and b) a unitary system.

[0090] Fig. 18a and 18b show the airflow through a top venting heat pump.

[0091] Fig. 19a and 19b show an integrated and modular side flow variant heat pump hot water system.

[0092] Fig. 20a and 20b show the airflow through a side venting heat pump.

[0093] Fig. 21a and 21b show an integrated and modular ducted flow variant heat pump hot water system.

[0094] Fig. 22a and 22b show the airflow through a ducted flow heat pump.

[0095] Fig. 23a and 23b show a wiring schematic for a) a heat pump-storage portion modular version and b) a unitary version.

Description of Embodiments

[0096] Overview

Heat pumps have previously been used to heat water for hot water tanks or cylinders. An overview of an example heat pump 2 and storage portion 3 is shown in Fig. 1. A hot water heat pump 2 has a water flow path that draws water from the storage portion 3 using a water pump 261 and passes the water through a heat exchanger 270 to heat it, it then discharges the water through an outlet back into the tank 451. The heat pump 2 has a refrigerant flow path that passes the refrigerant to an evaporator 280 to transfer heat to the refrigerant, a compressor 290 to compress the refrigerant, increasing its temperature, through the heat exchanger 270 to transfer the energy to the water, and through an expansion valve 262 to expand and lower the temperature of the refrigerant. Heat pumps 2 can provide very efficient heating. However, it is difficult to effectively connect them to a storage portion 3.

[0097] Heat pumps 2 operate with a refrigerant compressor 290. A refrigerant compressor 290 raises the temperature and pressure of the refrigerant in the system from low pressure, cool state to high pressure, gaseous refrigerant. Several types of compressor 290 are known, including fixed speed and variable speed, and compressors 290 with or

without an inverter to control the speed. Mechanisms include reciprocating, rotary, twin rotary and scroll. A particular compressor 290 may be selected or designed to suit the refrigerant used.

[0098] Refrigerant or refrigerant gas is circulated by the action of the compressor 290. The refrigerant gas used may be commonly known know refrigerants, synthetic or natural, single component or blends. In some cases, the refrigerant gas used may be an A3 flammable type refrigerant (such as R290 or propane). Alternatively, the refrigerant gas used may be a low GWP synthetic HFO blend. Using R290 or HFO the refrigerant cycle will be subcritical (two phase condensing type). In further alternatives, the refrigerant may be carbon dioxide, with a transcritical operating principle and single-phase gas cooler for the hot end of the heat pump. Other refrigerants may be used. Optionally the amount of refrigerant may be minimized, for instance by using less than 152 grams of propane.

[0099] The heat pump hot water system 1 has a heat exchanger 270 configured to exchange heat between water from the tank 451 and the refrigerant (a refrigerant to water heat exchanger - RTWHX). In some cases, the heat exchanger 270 is located directly below the compressor 290 and immediately above the storage portion 3. The heat exchanger 270 may receive hot refrigerant gas from the compressor 290 and transfer the heat to the water, to be returned to the tank 451. Various heat exchangers 270 may be used, including those that operate on a gas cooler principle or a condenser principle.

[0100] In some cases, the heat exchanger 270 may be a tubular heat exchanger. The tubular heat exchanger may form a spiral layout. The spiral layout can provide a required heat exchanger length in the least possible space. The spiral may have a single layer, or two or more layers. At least two, three or four turns of the tubular heat exchanger may be used in the spiral. The turns help to extend the length of the exchanger to maximise the heat transfer coefficient between the water to the refrigerant and maximise the available area within the height of the single tube for water to flow. The spiral may be annular so as the inlet and outlet are near the outer part of the heat pump.

[0101] The heat exchanger 270 may be substantially flat because of the spiral winding of a heat transfer tube. The winding may be wound in a spiral coil from an interior inlet to an exterior outlet, or vice versa. The spiral may have four windings. Other winding numbers are possible. In some cases, a single layer of windings is used. However, multiple layers of windings are also possible. In a multilayer example there may be two layers of four windings with the windings spiraling inwards and then outwards to make the connections simpler. The windings may be separated by a gap to reduce thermal connection between adjacent windings. Insulative material may be in the gap to prevent contact between adjacent windings. In some cases, a heat transfer assembly may be used. This may include a heat transfer tube or a non-coaxial arrangement for

the tubular heat exchanger, which does not form a tube, but allows suitable heat exchange.

[0102] The flat arrangement of the heat transfer tube of the heat exchanger 270 reduces the space required for the heat exchanger. This provides maximum space for the evaporator 280, compressor 290 and other components. In some cases, the heat exchanger 270 has a diameter substantially equal or near to the diameter of the heat pump 2. For example, it may be at least 80% or 90% of the diameter of the heat-pump. The heat exchanger 270 may be arranged perpendicular to the central axis of the heat pump 2 (so as to be horizontal in a heat pump that extends vertically). In some cases, the heat exchanger 270 is arranged at the top or bottom of the heat pump 2. For example, the heat exchanger 270 may be located at the bottom of the heat pump 2 where, when positioned on the storage portion 3, the heat exchanger 270 will sit just above the top of the storage portion 3.

[0103] The heat exchanger 270 may be surrounded by and/or secured in place by insulation. The insulation may extend from the insulated housing of the storage portion in an integrated construction. In some cases, the insulation is formed by a plurality of interlocking panel. The insulating panels may comprise upper panels and lower panels that sandwich the heat exchanger 270. Each insulation panel may form a quarter (or more, if desired) of the heat exchanger. Mounting brackets may attach the insulation and/or the heat exchanger to the base of the heat pump. The brackets may be attached to the heat exchanger and/or the insulation panels.

[0104] A single wall tubular heat tube may be used for some heat exchangers 270, including tube-in-tube types. In some cases, the heat exchanger may be a double wall heat exchanger (where there are two walls between the refrigerant and the water, to make three overall walls once the outer wall containing the refrigerant is included. In some cases, this may be referred to as a triple wall tube). For example, the groove may be required by standards bodies to provide a vent to atmosphere. The double wall heat exchanger provides two walls between the water and the refrigerant which provides additional protection. It may be used for drinking water applications. Alternatively, a single wall heat exchanger may be used, for example in non -potable water applications. The heat transfer tube comprises a tube which is configured to bring the water and the refrigerant into proximity to transfer heat from the refrigerant to the water.

[0105] The connections to the heat exchanger 270 may be configured to facilitate ease of connection to the water pump 261, inlet water conduit 211 and/or outlet water conduit 212. The refrigerant entry may be through an inlet pipe. The refrigerant outlet may be through outlet pipe. The inlet and/or the outlet pipe may extend vertically from the heat exchanger 270. This may orientate them towards the heat compressor 290, or reduce

the space required to position the heat exchanger 270. Similarly, the water inlet and water outlet conduits 211, 212 may be formed vertically (for example at or near substantially 90 degrees from the plane of the heat exchanger). This facilitates easy connection to the water pump 261.

[0106] The heat pump 2 may comprise a base. The base may separate the heat exchanger 270, or at least the heat transfer tube, from other components of the heat pump 2. For example, the heat exchanger 270 may be mounted below the base, for example by brackets, while the compressor 290, water pump 261 and impeller 207 are mounted on top of the base. The base may be plastic. The base may be moulded. Optionally the base has a plurality of mounts or attachment points for the various equipment, including the compressor and/or impeller, impeller driver or motor. A moulded plastic base provides for ease of assembly as well as corrosion resistance. The moulded plastic base optionally has attachment points for the heat exchanger 270 beneath so as the heat exchanger 270 can be secured beneath the compressor 290 and impeller portion 207. The attachment points may be configured to secure the heat exchanger 270 directly, the insulation panels secured around the heat exchanger 270 or clips or brackets may be used to support the bottom of the heat exchanger 270 and attach to the base through fastener locations. The fasteners may be, for example, screws or clips. Alternatively, for a unitary example, the attachment points may not be required because the heat exchanger 270 can be positioned during manufacture. In a unitary system the heat pump 2 and storage portion 3 can be factory fitted as a single assembly. This simplifies the electrical connections and reduces site assembly time, while still retaining the benefits of ease of servicing due to, for example, the location of the connections and the ease of access to these.

[0107] In some cases, the system 1 uses a tank connector 330 to allow water connections to and from the tank 451, through the tank wall. The tank connector 330 may be a flange. The tank connector 330 may improve functionality of the system. For example, a flanged tank connector 330 facilitates connection to a standard tank, because a standard 4-bolt flange fitting may be used. Connectors on each side of the tank connector 330 are fluidly coupled to provide for the required water connections between the tank and the heat pump. The tank connector 330 may have an element seal to ensure water tightness between the tank and the tank connector 330. The tank connector 330 may be suitable for mounting of a standard square flange resistance element and element seal. When the inlet and outlet conduits are connected the tank, connector provides an inlet flow path for water to the heat pump and an outlet flow path for water from the heat pump, passing the same opening in the tank wall.

[0108] The tank connector 330 may have a plurality of openings. The openings may be configured to allow water connections and/or sensor connections to be made to the

tank 451. The water connections allow water to pass to and from the tank 451. Openings may be machined through the tank connector 330, which may be a tank connection plate. A first opening may be configured to fluidly connect a water conduit 211, 212 to the water tank 451. The first opening may have a conduit 340, such as a tube, connected within the tank, such as a dip tube 340. The opening may be threaded, for example on the internal connection, to engage with the dip tube 340. The dip tube 340 may also be threaded to allow for a secure attachment. The threads may have a flat to allow torque tightening. The tank connector 330 may have a second opening configured to act as an inlet to the tank 451. The second opening may have an external fitting or connector configured to attach to a water conduit and/or an internal fitting configured to connect to a tube or conduit within the tank 451. There may be no internal fitting, with water flowing directly into the tank 451. In some cases, the dip tube 340 may extend towards the top of the tank 451. For example, the dip tube 340 may attach to the inlet to the tank and directing water to the top of the tank reduces mixing. In some cases, two dip tubes 340 are present, one on the inlet and one on the outlet to the tank. A second conduit or dip tube 341 may be attached to the second opening to guide water to or from a particular part of the tank 451.

[0109] The tank connector 330 may have an opening or recess that is not fluidly coupled to the water tank 451. For example, a connection may provide a sensor pocket. The sensor pocket provides a space or cavity within the tank in which a sensor can be placed, for example a thermistor to measure the temperature of the tank 451. In some cases, a seal may prevent water from entering the sensor pocket. The seal may be an o-ring. The o-ring may be captured between the sensor pocket and the connector. The sensor pocket and the connector may be attached via a threaded connection. The o-ring may be located in a machined sliding seal in the connector. A sensor may be placed in the sensor pocket by removing the optional cover (not shown) and inserting the sensor. The pocket may be replicable to allow alternative pockets, for example with different shapes or thicknesses, for different sensors to be used. The sensor pocket may be a housing attached inside the tank to avoid contact between the sensor and the water and/or leakage. An opening in the tank connector 330 allows a user to move a sensor through the connector plate and place the sensor in the housing. The housing or pocket may enable temperature sensing within the tank 451.

[0110] The openings preferably have connectors 321, 323 to allow for connection to suitable water conduits 211, 212. The connectors 321, 323 may be threaded. The inlet and outlet may extend in different directions. The directions may be separated by approximately 90 degrees. A first connection, such as the outlet, may extend perpendicular to the wall of the tank, while the second connection, such as the inlet may comprise an elbow to extend parallel to the wall of the tank. The inlet and outlet may

be reversed. Machined internal bores in both connectors 321, 323 may be designed to allow a sliding o-ring seal with water conduits. The openings may have an internal connector configured to connect to the inside of the water tank. The internal connector may comprise an internal thread configured to engage, for example an external thread of the dip tube. The connectors 321, 323 on the tank connector may have differences to ensure the appropriate connections are made. The differences may include opposite handed threads, or the direction of the connectors 321, 323.

[0111] In some case the openings are provided with covers, such as sealing caps. Seals may be provided to reduce leakage, such as sealing washers. The covers may be used in modular configurations, where the tank is shipped, during installation, or during maintenance where the heat pump module is not required and/or installed. In some cases, the covers are easily removed by hand, to simplify the installation process.

[0112] In one embodiment of the invention, two water conduits 211, 212 such as flexible hoses allow a hand tight sealed connection between the flanged tank connector and the refrigerant - water heat exchanger and inlet of the water pump respectively. Alternatively, the water conduits can be colour coded. In another example rigid or semi-rigid pipes can be used, particular in unitary constructions. The water conduits 211, 212 may have o-rings that seal to the main part after being tightened by hand. The inlet and outlet connectors 321, 323 and or the water conduits 211, 212 may be different to prevent incorrect assembly. For example, the thread direction may be reversed. The water conduits, 211, 212 may be handed so that it is impossible to connect them the wrong way around. Other indicators, such as size, shape or colour may be used to indicate to a user the correct hose.

[0113] In some cases, the system comprises a dip tube 340 which extends inside the water tank. The dip tube 340 allows water from at or near the bottom of the storage tank (which is normally colder than water at or near the top of the tank) to be drawn or siphoned to the exit point of the storage tank. The dip tube 340 may be constructed from a polymer that is suitably flexible and compatible with the temperatures and the water being heated (for example, potable/ non potable).

[0114] The dip tube 340 is fluidly connected or connectable to the outlet. The dip tube 340 may be attachable to a dip tube connection pipe which attaches to a tank connector 330. The dip tube 340 may be fitted to the dip tube water pipe by heating the tube to expand it while pushing it on to the dip tube connection pipe. Alternatively, the dip tube 340 may be directly attached to the connector. The dip tube 340, in combination with the tank connector 330 allows the easy connection of the heat pump 2 because the dip tube 340 may be installed on the tank connector 330 and inserted into the tank 451. The water conduits 211, 212 may then be attached separately to the tank connector 330. This means that there is no forces rotation of the dip tube 340, or misalignment of

the dip tube 340 when the water conduits 211, 212 are attached. The dip tube 340 is then in fluidly connection with the water inlet conduit.

[0115] The water pump 261 may be configured to circulate water (i.e., a water circulating pump) from the storage portion 3 through the heat exchanger 270, returning the heated water to the tank 451. In some cases, the water pump 261 is a variable speed pump. Alternatively, the water pump 261 can be speed controlled by an external controller. Optionally the water pump 261 is a brushless DC or electronically commutated pump. In some cases, the water pump 261 has connectors to allow connections to mating parts. The connectors may be flange / clip connectors. The connectors may use seals, such as o-ring seals. In some cases, the orientation of the water pump 261 is configured to improve flow. The water pump 261 may have a substantially horizontal rotational axis. The inlet to the water pump 261 may also be horizontal while the outlet of the water pump 261 may be vertical. The water pump 261 may be connected between the water tank 451 and the heat exchanger 270.

[0116] The pump inlet may have an inlet adaptor. The inlet adaptor may have a male thread to allow connection to a water conduit from the tank. The inlet adaptor may have an outlet connector to allow connection to the pump. The outlet connector may have an o-ring seal. The outlet connector may allow a sliding insertion to the heat exchanger connection. This may use a flange and/or be retained, for example using a spring clip. In some cases, the water conduit connects directly to the pump via a flanged connection that is a part of the inlet pipe. Other means of connecting to the water pump 261 may be used.

[0117] The pump outlet may have a pump outlet adaptor. The inlet of the outlet adaptor may have a slidable connection with the outlet of the pump. The inlet may have an o-ring seal. The adaptor may be retained on the pump with a flange integrated to the outlet adaptor. The outlet of the outlet adaptor connects to the heat exchanger. The connection may use a sliding fit. Seals such as two o-ring seals and may be used. In some cases, the pump outlet adaptor allows for misalignment of the pump because it can rotate about the axis of the inlet fitting. The pump outlet adaptor may be retained by an external clip that sits in a mating groove on the inlet of the heat exchanger.

[0118] In some cases, an air vent is connected to the system. The air vent may be connected to the high point of the piping system. The air vent removes excess air in the system, on startup and/or during normal operation. In some cases, the air vent is attached to the inlet fitting of the heat exchanger. The attachment may use a parallel thread and/or may be sealed via use of an o-ring. The o-ring may be positioned at the base of the thread to seal against a sliding face near the top of inlet fitting. Alternatively, the air vent may be held in place by a retaining clip. Various types of air vent can be used.

[0119] In some cases, (for example subcritical systems) a temperature sensor is retained to

the heat exchanger. The sensor may be located at or near the condensing phase of the refrigerant side of the heat exchanger. The sensor may be retained in an opening such as a pocket, which is attached to or part of the heat exchanger. The sensor may be retained by a retainer, such as a clip. The sensor may be a temperature sensor and/or a pressure sensor. In other cases, the sensor and/or retainer may be located at the refrigerant inlet or outlet, for example to sense the pressure of the refrigerant in the heat exchanger.

[0120] The sensor measurements may be relayed to a control system, such as a controller 253. The control system may control the operation or speed of the water pump 261 and/or compressor 290. For example, the speed may be controlled to maintain a constant outlet temperature at the sensor location. Further sensors may also be used. For example, a temperature sensor in the tank and/or on the water connection may be used. The control system may use an algorithm combining the temperature and/or pressure of the heat exchanger as well as the water temperature. The control system may be configured to control the water pump 261 to provide sufficient flow for a single pass of the water flow to achieve a constant outlet temperature.

[0121] The water is discharged from the heat exchanger 270 through water conduit 212. This may be a flexible conduit, such as flexible hose. Alternatively, a semiflexible or rigid conduit may be used. The water conduit 212 may be connected to a threaded outlet connection on the heat exchanger. The water conduit 212 is connected to the tank connector 330 so that the heated water leaving the heat exchanger 270 exits back into the tank 451. The tank inlet may have an internal pipe to direct the water reentering the tank 451.

[0122] The tank connector 330 may be fitted relatively high up on the storage portion 3 to minimise mixing of the hot water reentering the tank 451 with the cold water remaining in the tank 451 when draw off is high. Alternatively, the hot water inlet to the tank 451 may have a conduit mounted within the tank to transfer or direct the hot water towards the top of the tank. The tank connector 330, or the internal outlet of the heated water, may be at least halfway up the storage portion 3, at least three quarters of the way up the tank 451, or within the top 30 percent, 20 percent, or 10 percent of the tank.

[0123] On leaving the heat exchanger 270 the refrigerant may be in subcooled liquid or in cool gaseous form, depending on the operating principle of the heat exchanger 270. The refrigerant passes into an expansion valve. Various types of expansion valve may be used. The expansion valve may be controlled by a stepper motor. Alternatively, a thermostatic expansion valve may be used.

[0124] In some cases, the heat exchanger 270 may use a reversing valve such as a four-way reversing valve. For example, if a subcritical condensing type of heat exchanger 270 is

used. This allows the reversal of the flow of refrigerant, that may be required at several steps of the cycle. The reversing valve allows equalization of pressure between high and low sides of the system and defrosting of the evaporator 280 under frosting conditions. In some cases, a hot gas solenoid valve may be used to divert hot gas from the heat exchanger 270 to the evaporator 280. The selection of the hot gas solenoid valve or four way reversing valve may depend on the specific design and requirements of the system.

[0125] In some cases, the refrigerant is conveyed to a refrigerant distributor after expansion. The distributor divides the refrigerant into a plurality of circuits. The design of the distributor, number of circuits, diameter can be optimized to suit the requirements of the particular refrigerant gas, required duty cycle of the system and/or operating conditions. The distributor tubes carry the refrigerant into the evaporator. The performance of the evaporator 280 can be improved by increasing face area and surface area. The face area and related surface area of the evaporator 280 may be maximized by wrapping the evaporator 280 in a semi-circular arrangement around the periphery of the heat pump portion. The diameter of the wrapping may extend substantially to the diameter of the external casing of the system 1 (which may be circular).

[0126] The evaporator 280 may form a portion of the perimeter of the heat pump 2, such as a segment of a circular heat pump. In some cases, the evaporator 280 extends over more than 180 degrees of the cylindrical heat pump and may be substantially the greater part of 360 degrees. The evaporator 280 may extend over at least, 234 and/or 270 degrees. The wrap around evaporator 280 provides the largest possible face area. Optionally the wrap around evaporator 280 covers at least 180 degrees of the circumference of the heat pump 2. The greater portion of the periphery covered allows a lower overall height of the heat pump 2 for the same base diameter and/or evaporator area. The large area for the impeller 207 and evaporator 280 also reduces system noise and can provide higher performance relative to input power. The divider 281 also reduces noise by placing a separation between the compressor 290 and the impeller 207 area, which is open to the air.

[0127] A divider creates a separation between an impeller portion containing the impeller 207 and a compressor portion containing the compressor 290. The divider or separator may be a single sheet of material, such as metal or plastic, extending across the space between the ends, or near the ends, of the evaporator. The divider or dividing wall creates a compressor cavity. The compressor portion is bounded by the heat pump base, the front cover or outer wall portion, the divider, the ends/flanges of the evaporator and the upper surface of the housing. Alternative walls or surfaces may be used to define the compressor cavity in some cases. The compressor portion forms a semi-sealed box around the compressor 290, associated control valves, pump, and

electronics. In some cases, venting holes are present to allow the exit of flammable gas in the event of a leak. The compressor portion is sealed to prevent ingress of water and egress of noise from the compressor and pump. The divider may have a 90 degree return at the top so that a seal can be made with the top lid. Alternative top sealing arrangements are possible.

[0128] The divider is designed to maximise the available space for the impeller, while also accommodating the required heat pump components. As shown the divider forms a "W" shape this provides a maximum diameter for the impeller, which can extend into the central fold, while provides sufficient space for componentry. The divider forms a compressor portion as an annular segment of the heat pump 2.

[0129] The divider may be constructed from folded steel. Alternatively, the divider can be moulded from various polymers, or stamped from metal. The divider may have a plurality of bends or folds, forming a plurality of sections in the divider, to achieve the required shape. The folds in the divider can be formed with a small or large radius. The arrangement of the folds enables the heat pump components to be contained within housing while ensuring a large evaporator length and air flow and around the evaporator. Compressor 290 requires a reasonable space behind divider due to its dimensions. The outer angle may be required to fit the compressor. The divider may bend inwards towards the centre of the heat pump to allow for the largest possible impeller for the space available. Divider sections may comprise outer portions extending inwards from the evaporator 280, or edge of the heat pump 2 and inner portions curving or bent around the impeller blades. The divider may be substantially vertical. In other cases, the divider may be curved or shaped in the vertical direction. For instance, the base of the divider may be flared into or away from the impeller portion to change the available space on each side of the evaporator. In particular, any shaping may be below or under the impeller so as not to restrict movement of the impeller or air around the impeller.

[0130] The heat pump 2 may have a plurality of sensors arranged around the components. Sensors such as thermistors may be arranged on the inlet and/or outlet of or on the heat exchanger. Sensors such as thermistors may be arranged on the inlet and/or outlet of or on of the water conduits. Sensors such as thermistors may be arranged to detect ambient temperature. Sensors such as thermistors may be arranged on the inlet and/or outlet of or on of the compressor.

[0131] The heat pump 2 may have a control housing to house the controller 253. The control housing has electrical harnesses to the controller 253, such as a PCB, and heating or high-power connection to provide power to the heat pump 2. The controller 253 is configured to receive and/or send signals. The signals may be sent on the control connections. The controller 253 is configured to operate the heat pump 2 dependent on the

received signals. The control housing may comprise a power converter configured to convert or regulate the high-power connections and/or signal connections to provide power and/or signals to the heat pump (referred to as "electrical connections"). The control housing may be mounted at or near an outer perimeter of the heat pump 2 to allow straightforward access. The control housing can be mounted in front of the heat pump components on compressor portion. This allows the electrical and water connections to pass and/or be connectable just beneath the controller 253 or control housing. The control housing may be sealed via the use of a peripheral rubber seal and compliant seals that substantially seal the gap between the electrical harnesses or harnesses (typically two) and the housing. The housing may be configured to pass the requirements for leakage of refrigerant specified in typical electrical safety codes (such as for A3 and A2L refrigerants). The housing may be explosion proof to safety shut down the heat pump in emergencies. Alternatively, the control housing 250 (in a different shape) may be mounted at the top of the compressor housing, for example above the pump/reversing valve. This has an advantage of freeing space at the front of the compressor housing, however the overall height of the heat pump portion of the product may increase and the attendant assembly costs.

[0132] The control housing 250 may comprise a control panel 203 such as a user interface 252. Alternatively, the user interface 252 may be located elsewhere on the heat pump, or remotely and connectable to the heat pump (e.g., on a personal electronic device). The user interface 252 may comprise at least one, or a plurality of buttons or other user inputs. The buttons may be several different types for example, membrane, pushbutton, or capacitance sensing type. In some cases, a screen, such as an LCD, LED or OLED screen, or a touch screen may also be provided. The user interface 252 is configured to send and/or receive signals to/from the controller. The control housing 250 optionally has a removeable front cover to allow access within the control housing, in particular access to the controller or PCB. Optionally the screen is mounted behind a clear portion of the front cover so that water ingress is eliminated. The front cover may have recesses, screens, openings, or mechanical connections to enable a user to see and/or operate the user interface 252.

[0133] In some cases, the heat pump 2 has variants. For example, the heat pump may have different air flow options. A top venting arrangement expels air vertically. Side venting arrangements expel air horizontally, Ducted arrangements use ducts to direct the airflow. The ducts may be arranged on the top or side of the heat pump 2. Ducted arrangements may comprise spigots to facilitate inlet and outlet ducting to be attached. The spigots may be arranged on the top or side of the heat pump 2. Further arrangements of air flow are also possible depending on the desired installation configuration of the heat pump 2.

[0134] The heat pump 2 may be provided in one of several airflow configurations. For example, the airflow may be discharged vertically from the heat pump portion of the product. Alternatively, the airflow may be discharged from the side of the heat pump portion. Alternatively, the airflow is inducted and discharged through openings in the outer wall of the heat pump. The openings may be connected to ducting, if required, when installed. Alternative airflow patterns can be used.

[0135] A vertical air discharge configuration may comprise an impeller 207 such as a fan blade that is located eccentrically in relation to the evaporator and/or casing assembly. The impeller 207 may be directly connected to an axial fan motor, which would then also be eccentrically located in the heat pump 2. In the vertical arrangement the axial fan blade moves air through the periphery of the evaporator 280 by induction and discharges the air out of the casing vertically. In some cases, the diameter of the impeller blade is maximised to fill the available space. This allows the rotational speed of the impeller 207 to be decreased. The impeller 207 may have a motor or actuator positioned beneath or in mechanical connection with the impeller to drive it. The motor may be a brushless DC motor with speed control capability. In other embodiments, the impeller motor may be an induction type, or electrically commutated (EC) type. Alternatively, air flow in the heat pump 2 may be generated through other means, such as an air curtain. The evaporator 280 may have a flange or frame at least one, or both, ends to attach to the heat pump 2 housing and/or the divider.

[0136] In some cases, the heat pump 2 comprises a single-row evaporator (such as a finned heat exchanger) and a large diameter, slow turning axial fan. This combination allows a high air volume over the evaporator coil and a low temperature difference (TD) between the refrigerant in the coil and the air. Overall, this combination may low delta T performance (high SCOP) with low noise.

[0137] Heat pump hot water systems 1 may be unitary systems or modular systems Modular systems allow the heat pump 2 and the storage portion 3 or water cylinder to be reversibly connected. The present heat pump water heater systems 1 may be modular, for example with two modules, a heat pump 2 and a storage portion 3. Such modular systems may be easily assembled or disabled during installation or maintenance to allow flexibility of use. In some cases, a mount on the storage portion (such as upper surface 310 and/or lip 32) lip and a corresponding mounting portion (such as lower surface 210 and flange 216) of the heat pump 2 allow for suitable connection. The mount may be a lip, and the mounting portion a flange. The modular system allows an installer to quickly and easily connect the two modules, in contrast to prior art systems that may have multiple sections but require complex assembly and/or wiring to be completed on site. Alternatively, the systems can be assembled as unitary or integrated systems.

[0138] When used as a modular system the connections (water 211, 212 and electrical 444, 445) may be provided in easy to reach locations. In some cases, there are at least two access panels providing access to the connections. These may be located on the heat pump portion 2 and the storage portion 3 respectively. The connections may be made by hand and/or without the use of tools. The modular system may allow for easy lifting of each module and for simple connection/disconnection between the modules. The modular system also allows for a range of module installations. In some cases, the storage portion is installed without the heat pump module and may operate as a normal hot water cylinder. In some cases, when the heat pump 2 is installed and connected electrically to the storage portion 3, the heating element 311 of the storage portion 3 is de-energized so as the heat pump 2 acts independently.

[0139] The heat pump 2 may be configured to facilitate installation of the modular system. The heat pump 2 may have a mounting portion, such as flange or skirt to better secure to the storage portion and/or engage with a recess or lip on the storage portion. To enable the heat pump 2 to be easily and safely lifted and installed at least one, and preferably at least 2, at least 3 or at least 4 handles. The handles may be arranged on the outer periphery of the heat-pump housing. The handles may be recessed to provide a cleaner look to the system. In some cases, only some of the handles are recessed. The handles may be positioned to allow the heat pump to be located in a corner without the handles contacting the wall. In some cases, the outer casing may need to be removed before the handles are accessible.

[0140] The heat pump 2 may have a lower surface configured to sit on and/or engage with the upper surface of the storage portion. The heat pump 2 optionally has substantially the same diameter as the corresponding storage portion 3, although changes in diameter and/or shape are possible. In some cases, the diameter of the heat pump 2 is slightly smaller than the storage portion 3 to provide clearance for ease of installation. A control panel 203 may be located on the heat-pump. Optionally the control panel 203 is located on the outer wall, and as a user accessible panel.

[0141] When placing the heat pump 2 on the storage portion 3 the installer simply has to connect the water conduits 211, 212 to the tank connector and connect the electrical harnesses 444, 445 between the units. In some cases, the water conduits 211, 212 may pass through an opening in the upper surface of the storage portion. The water conduits 211, 212 may extend through a passageway in the insulated housing surrounding the tank (for example, in a moulded insulation cavity) to appear at the upper element. Alternatively, the water conduits 211, 212 may be disconnectable from both heat pump 2 and storage portion 3. Alternatively, the conduits 211, 212 may be attached to the storage portion 3 and be pushed up through the opening. The insulation housing may be moulded to allow ease of passage of the conduits through the passageway.

[0142] When the heat pump 2 is connected to the storage portion 3 the water conduits 211, 212 can be fluidly connected to the storage portion 3 to allow cold water to be drawn from the tank 451 and hot water returned to the tank 451. Because the water pump 261 is located in the heat pump 2 the only connections required are the water connections and the electrical connectors, if required. The heat pump 2 may function separately from the storage portion 3 and similarly the storage portion 3 can operate without the heat pump 2. This modular approach allows multiple uses for the heat pump storage portion combination, as well as making ease of install easier as two independent parts reduces the weight required to be lifted by the installer. In some cases, the heat pump 2 is remote from the storage portion 3, with extended cables running between them. This may reduce the height of the system or provide further flexibility.

[0143] The modular arrangement allows an installer to place the heat pump on top of the hot water storage portion. The heat pump 2 may be turned so as a bottom opening aligns with the opening in the storage portion 3 so that the corresponding cabling can be connected. Alternatively, the connections may be made externally, optionally with a cover. In some cases, guides or orientation devices may ensure the heat pump is correctly aligned on top of the storage portion or guide the heat pump 2 into a correct alignment. For instance, corresponding protrusions and recesses on each part may be configured to engage only when the parts are correctly aligned. The recesses or protrusions may be shaped so that, when approximately aligned the heat pump is brought into expected alignment. An example is where the recess narrows or tapers. The installer then merely has to pull the electrical harnesses up from the storage portion and connect them and pass the water conduits to the upper electrical mount and attach them to the tank connector. In some cases, the different shapes, or styles of the connections and/or hoses or tubes distinguishes the correct connections to be made to avoid incorrect attachment.

[0144] The storage portion 3 may have a controller 312. The controller 312 may be in the lower element mount 302. The lower element mount 302 may also connect to the heating element. The electrical connections 350 may extend from the lower element mount to the heat pump 2 to provide power and/or control signals to the heat pump 2. The electrical connections 350 may extend within the insulated housing 450 of the storage portion 3. The electrical connections 350 may pass through the upper element mount 301 and through the same, or a parallel passageway as water conduits 211, 212. In some cases, the element mounts 302, 301 may be referred to as penetrations, as they provide openings through the wall of the tank 451 in the storage portion 3.

[0145] Fig. 2 shows an exploded view of an example of a hot water system 1. The hot water system 1 is modular, having two modules, a heat pump module 2 and a storage portion 3. The heat pump 2 is mounted on the storage portion 3. A heat pump mount may be

used to facilitate the mounting. The mount comprises the lip 320 on the storage portion 3 and engages with a flange 216 on a heat pump mount. Although the heat pump 2 may be permanently attached or mounted to the storage portion 3 there are benefits from having both its physical connections and water connections and/or electrical harnesses removably connectable to storage portion 3 to allow the components to be carried and installed separately, as well as being easily removed for servicing. When mounted the heat pump 2 and storage portion 3 may appear from the outside similar to a unitary system. The modules are indicatively shown as cylindrical, but other shapes may be also be used.

[0146] Fig. 3 shows the heat pump 2 of Fig. 2. The heat pump 2 having a vertical air flow (top vent) arrangement with inlet vents 204 arranged in the outer wall 205 of the heat pump housing and an outlet vent 202 arranged through an upper surface 221. In the heat pump 2 air is drawn in through inlet vents 204 over the evaporator on at least one portion of the outer wall, and optionally a majority of the outer wall. As shown, the outlet vent 202 has a large radius to minimise flow disturbance and is located on the upper surface 221. The outlet vent 202 may be substantially the same diameter as the impeller. Alternative air flow configurations are possible and will be discussed below. A control panel 203 is visible through the outer wall 205 to allow user to adjust settings on the heat pump 2. The lower surface 210 is configured to sit on the storage portion 3 and may have a mounting portion such as skirt 216 as well as a guide portion to ensure correct alignment.

[0147] Fig. 4a shows a base 470 of the vertical airflow variant in plan view. A 3D view is shown in Fig. 4b. Variations to the layout may be used to enable different air flow variants. The base 470, as shown, may be moulded in plastic. The base 470 is configured to facilitate ease of assembly of the heat pump 2 and optional easy mounting/dismounting of the heat pump 2 onto the storage portion 3. A protrusion, such as a wall, shown as upstand 490 is used to guide assembly of the divider panel. The upstand 490 may seal against the divider panel. Fastener locations, such as recessed bosses 491, are designed to receive screws to facilitate attachment of a divider panel. The upstand 490 can be used to control the dimensions of the divider.

[0148] The evaporator is located by a number of protrusions and/or recess, such as features 492, 493 and 495. For example, protrusions 495 around the circumference of the base 470 may clip to the base of the evaporator 280, or otherwise fasten thereto. Protrusions 495 may press against the evaporator fins and locate the evaporator around its periphery. Protrusions, for example tabs 492, 493 at the end of the divider may assist with alignment of the ends 282 of the evaporator, for example by locating the flange of the evaporator 280. The location is in the radial and circumferential directions.

[0149] In some cases, a plurality of handles 201 are located around the periphery of the base

470 to facilitate ease of handling of the heat pump 2. These may be internal handles or external ones or a mix of both. There may be at least two handles 201. The base 470 may have a number of openings such as penetrations through its surface 496. Penetrations 422 and 423 are provided to allow ease of assembly of the condenser into the base 470 and allow the water inlet, water outlet, refrigerant inlet, water outlet to pass through. A cavity 510, optionally in the front of the product, allows water inlet and water outlet conduits to pass through from the storage portion 3 up to the heat pump 2, through the base 470. Cavity 510 also allows electrical connections (with or without connectors) to pass through. A condensate channel 432 may be used to collect condensate generated from the evaporator 280 which exits the base 470 at a drain 433. The drain 433 may be a single point. Drain 433 optionally incorporates a spout which allows a flexible hose to be attached for drainage to a remote point. A protrusion such as wall 440, in this case intermittent, allows location of the compressor. Optionally through the use of a mounting flange (not shown). The compressor and/or the flange can be held in place by fasteners, such as mounting screws, at fastener locations 441. A further boss or fastener location 441 allows a mounting bracket to be affixed to hold the water pump 252. The fastener location 441 can incorporate a boss to support the mounting bracket.

[0150] Fig. 4b shows a mount 430 for the impeller 207, with fastener locations 431. The impeller 207 may be mounted on a removable mount 630 as shown in Fig. 4c which mates to the base 470 via a locational flange 641 with fastener locations 642. The removable mount 630 allows the impeller 207 to be positioned at the desired height/ location in the heat pump. Fasteners, such as screws, may be used to retain the removable mount 430 to the base 470. The fasteners may attach between the respective flanges 641 and 430. Mounts, such as castellations 643, are provided on the top of the mount 630. The mounts have locational 645 and/or securing 644 mounting points to facilitate ease of connection of a fan motor.

[0151] Fig. 5 shows the heat pump 2 of Fig. 3 with the outer wall 205 removed. All, or a portion of, the outer wall 205 may act as a removeable cover, allowing access to the heat pump 2 during installation or maintenance. The heat pump 2 has a horizontal base 470. The heat exchanger (not shown in Fig. 5) is located below the base with other components located on or above the base. A divider 281 divides the space above the base into two portions, an impeller portion 404 containing the impeller 207 and a compressor portion 405 containing the compressor 290. This seals the compressor. The divider 281 extends in a 'W' shape formed by sections across a portion of the heat pump. It extends to the ends of the evaporator 280. The middle of the divider curves inwards to maximise the space available for the impeller 207. The divider 281 has a folded edge 281a at the top to form a seal with the cover or upper surface of the heat

pump 2.

[0152] The impeller, such as fan 207, is configured to encourage or urge air through the evaporator 280 and through the outlet vent 202 shown in Fig. 2. The evaporator forms part of the refrigerant flow circuit. After heat is transferred to the refrigerant in the evaporator it moves to the compressor 290, then to the heat exchanger where heat is transferred to the water, before passing through an expansion valve 262 and through the refrigerant distributor 260 and through a plurality of refrigerant paths 214 through the evaporator. Fig. 5 shows a reversing valve 264 that may be present in the heat pump to allow heating and cooling.

[0153] The heat pump has a water flow path for water to flow through the heat pump 2. Although we refer to water throughout it is understood an alternative fluid could similarly be used. The water flow path includes the water inlet conduit 211 and water outlet conduit 212. The conduits are shown as tubes, but may be pipes, flexible hoses or flexible pipes or other suitable conduits. The conduits 211, 212 allow water to travel between a storage portion 3 the heat pump 2 for heating. The water then travels through a water pump 261 and through the heat exchanger 270 to be heater by the refrigerant. As shown the connectors 213 on the water inlet conduit 211 and water outlet conduit 212 may be different, to avoid incorrect installation. The connectors 213 may have seals or o-rings to allow sealing with the storage potion 3. The connectors 213 may have sliding o- ring seals and knurled nuts to allow finger-tight sealed connections to be made, without the use of tools, Other connectors may also be used.

[0154] As shown in Fig. 2, the inlet and outlet water conduits 211, 212 are configured to pass through an opening 4 in the water storage portion 3. An opening 510 in the base of the heat pump allows the conduits 211, 212 to pass through the base and into the opening 4. Locating the conduits 211, 212 at the bottom front of the heat pump 2 near the edge of the heat pump outer wall 205 allows the connectors 213 to be easily grasped by the assembler/ installer and passed through the opening 4. The water conduits may then pass along a passageway inside the storage portion 3 to allow connection with the tank connector 330. Alternatively, the water conduits 211, 213 could pass outside of the storage portion. A cover could be used to conceal the connections. Further alternative arrangements are possible, an external connection may be made between the heat pump 2 and storage portion 3, or the opening 4 may be elsewhere on the upper surface of the storage portion 3, with the water inlet and outlet conduits 211, 212 configured to meet the opening

[0155] Fig. 5 shows the front perspective view of the heat pump 2 with the control housing 250 removed. This view shows multiple of sensors arranged around the components. In some cases, not all sensors will be present, or additional sensors may also be used. A thermistor 291 is arranged on an inlet or outlet of the heat exchanger. A thermistor 293

is arranged in connection with the outlet water, or outlet water conduit 211 to detect the outlet water temperature. An optional thermistor 292 is arranged on or in connection with the RTWHX condenser at the condensing phase of the refrigerant (for subcrictical versions). On transcritical systems, or if elected by the designer on sub-critical systems, a pressure sensor may be used in lieu of a temperature sensor. A thermistor 294 is arranged to detect an ambient temperature, this may be configured to pass out of the heat pump 2 housing. A thermistor 295 is arranged on the inlet water tube 212, or to detect the inlet water temperature. A thermistor 296 is arranged on or to detect a temperature at the outlet of the compressor 290.

[0156] The heat pump has a lower surface 210 configured to mount to the storage portion. Handle 210 extends from heat pump to provide a lifting option. Handle 201a is instead recessed in the front of the heat pump 2. This allows it to be covered, providing a clean face for the heat pump 2. Alternatively, or in combination, the heat pump may comprise mounts, such as feet, for mounting the heat pump to alternative surfaces. For instance, the feet may be arranged to mount the heat pump any level surface.

[0157] Fig. 6 shows an exploded view of the heat pump 2 where the insulation 272 and the heat exchanger 270 have been removed from below the base 470 of the heat pump 2. A lower wall portion 461 of the heat pump extends past the base to cover the heat exchanger when assembled. The heat exchanger 270, or at least the heat transfer tube 271 is secured in insulation 272. The insulation 2 reduces heat loss in the exchanger. The insulation of Fig. 6 is formed by insulation panels 273, with four panels forming each of the top and bottom sections of insulation. The insulation panels are interlocking to form a secure layer. The insulation panels 273 may be moulded to tightly surround the heat transfer tube. Mounting brackets 279 support the insulation 272 and the heat exchanger within the insulation 272. The mounting brackets 279 are fastened to the base 470 at fastener locations 2791.

[0158] The heat exchanger 270 may comprise a double tube. Other configurations are possible, such as a shotgun arrangement where the refrigerant and water tubes are bonded together side by side, or where the refrigerant tube is spirally wound around the outside of a fluted inner tube. The double tube has an inner tube in which the water is conveyed and an outer tube through which refrigerant flows to heat the water. In such cases the heat exchanger 270 has a water inlet 274 and water outlet 275 as well as refrigerant inlet 276 and refrigerant outlet 277. The inner tube may be corrugated to reduce the length of the refrigerant flow path and improve heat transfer. Fig. 6 shows the spiral winding from the inlet 274 toward the middle of the heat pump 2 and the outlet 275 towards the perimeter of the heat pump. Four windings of the heat transfer tube are shown, although this may vary. A single layer of the heat exchanger is used as this has been found to provide sufficient heating while reducing the height of the

system. The inlets 274, 275, 276, 277 extend vertically, so as to pass through openings in the base 470 and/or insulation 272 and connect to components or conduits in the heat pump 2.

[0159] The compressor 290 has also been removed, so that optional vents 391 in the divider wall are visible. In some cases, the vents 391 will be not be used to improve the sealing of the compressor portion. The removal of the compressor 290 also allows the ends 282 of the evaporator 280 to be visible. The refrigerant paths 214 extend through the evaporator ends 282, that may have a flange, while the divider 281 is connected to them to separate the compressor and impeller portions.

[0160] Fig. 7 shows the heat pump 2 of Fig. 6 with the control housing 250 in place at the front of the heat pump 2. The front cover 281 of the control housing 250 is shown in exploded form. The control housing 250 has electrical harnesses for control 444 which are configured to connect to control connections from the storage portion and -power connection 445 configured to supply power to the heat pump 2. A single combined electrical connection may be used alternatively. A controller 253, such as a PCB, in the control housing 250 is configured to receive and/or send signals on control connections 444. The controller is configured to operate the heat pump 2 dependent on the sent/ received signals. The control housing 250 may comprise a power converter configured to convert or regulate the high-power connections 445 to the required signal connections for the heat pump 2. The control housing 250 is shown mounted at or near an outer perimeter of the heat pump 2 to allow straightforward access. In particular, the control housing 250 is mounted in front of the heat pump 2 on the side of divider 281 away from impeller 207. This also allows the electrical 244, 245 and water conduits 211, 212 to pass and/or be connectable just beneath the control housing 250.

[0161] The control housing 250 is sealed via the use of a peripheral rubber seal and compliant seals that substantially seal the gap between the wiring bundles (shown as control connection 444 and heating connection 445) and the control housing 250. When correctly assembled, the housing will pass the requirements for leakage of refrigerant specified in typical electrical safety codes. (required for A3 and A2L refrigerants). A user interface 252 may be provided. The user interface is shown as part of the control housing 250. The user interface 252 may have a plurality of buttons or switches 258 to allow control of the device. These may be appropriately sealed as shown.

[0162] Fig. 8 shows the detail of the connections below the control housing. As shown, they are arranged above an opening 510 in the base 470 of the heat pump 2 to allow them to be connected to a storage portion 3. The water conduits 211, 212 may be of a sufficient length to reach the storage portion 3 while being able to be coiled within the space below the control housing 250. Connectors 213 are shown as threaded connectors

suitable for hand tightening. The electrical harnesses 444, 445 have connectors to allow connection to mating connectors extending from the storage portion.

[0163] Fig. 9 shows detail of the water pump 261 and heat exchanger tube 271. An exploded view is shown of the pump connections, where the water pump 261 would sit on the base 470 (not shown) and the heat exchanger tube 471 below the base. In some case the position of the heat exchanger tube 271 may be moved, for instance to the top of the heat pump 2. The water flow path is driven by water pump 261 through water inlet 274. A non-return valve such as a check valve 415 may be used to prevent water returning to the water pump 261 at the outlet, depending on the type of pump used. The water pump 261 urges the water into the heat exchanger through a water inlet tube 274. An air release valve 414 in fluid connection with the water pump is configured to avoid air being introduced into the heat exchanger. A thermistor or temperature sensor may be provided to measure the temperature of the water entering the heat exchanger. Openings through the base 470 of the heat pump 2 allows connections to be made to the heat exchanger 270 below.

[0164] Typically, sensors are provided on the water inlet 274, and outlet 275 of the heat exchanger 270 to allow water to flow through heat exchanger pipe 271. The sensors may allow sensing of the water inlet and outlet temperature. The sensors be attached through supports, such as brackets 419, provided on the water inlet and/or the outlet. The connectors on the fitting of the inlet 274 can be a parallel thread with a toleranced inside dimension to receive a connector 126 such as a mating part with a seal such as o-ring 127. Other means of sealing can be provided. The water pump 261 may be connected to the heat exchanger tube 271 by an adaptor 385. The use of adaptors allows the unassembled heat exchanger 270 to be inserted into the base 470 easily. When assembled the adaptor 385 fits together with the connectors to the pump 261 and inlet 274. Adaptor 385 seals onto connector 126 via the use of O-ring 127. Additionally, adaptor 385 is cross drilled to allow flow from the water pump 261 into the heat exchanger regardless of the orientation of adaptor 385. Adaptor 385 may have a large internal bore to receive a check valve 415 to prevent reverse flow of water when the water pump 261 is not running. Adaptor 385 may be retained in place by a fastener, such as clip 388, to fit into a mating groove in connector 126. Alternatively, adaptor 385 can be retained using a spacer that holds it in place when vent 414 is installed. Automatic air vent 414 allows venting of excess air in the water circuit upon startup and during operation of the heat exchanger 270, as required. Typically, vent 414 is retained with a thread, however other securing devices may be used. For example, a clip can also be used.

[0165] The water pump 261 may have flanged connections to allow o-ring seal and clip retention by clips 362. This allows reliable and fast connection to the inlets and outlets

(outlet adaptor 385 and inlet adaptor 361). In some cases, the water conduit 274 can be directly connected to the water pump 261 with a mating flange and/or o-ring assembly. This would remove the need for inlet adaptor 361. Inlet adaptor 361 allows connection of the water pump 261 to a mating conduit with a swivel nut and allows standardization of the water conduit connections used. Other known methods of connecting the water pump 261 and heat exchanger 270 may be used.

[0166] Fig. 10 shows a rear view of the heat pump of Fig. 5. The impeller 207 is off centre in the impeller portion 404 so as to maximise the size of the blades used and therefore airflow. The impeller is mounted on a motor or drive 217, but variations are possible. The divider is visible separating the compressor portion from the impeller portion. The central curve or recess of the divider is shown as allowing the larger impeller to rotate freely. The evaporator edge 282 is shown as flange which extends outwards to meet the outer housing. A condensate channel 432 in the base removed condensate from the evaporator (as discussed in Fig. 3). As shown here the channel 432 runs along the bottom edge of the evaporator and draws condensation to exit the heat pump near handle 201. A continuous fall is provided from either end to the termination point. A single drain point allows easy connection of a flexible hose to allow the condensate to drain and not cause any issues during operation. The position or structure of the condensate drain may be configured as required.

[0167] Fig. 11 shows a heat pump 2 with a cut-away portion of the evaporator 280 to show the impeller portion 404 of the internal space. The impeller portion 404 contains impeller 207 and the motor 217 driving the impeller. The impeller 207 is shown extending above the upper surface 221 of the heat pump 2 with grill 406 providing protection while allowing air flow. This helps to increase the air flow above the heat pump 2 and push air sideways. A cross section of the evaporator 280 shows the refrigerant paths 214 passing therethrough which are configured to carry the refrigerant through the evaporator 280. The inlet vent 204 (forming an outer evaporator casing) surrounding the evaporator 280 has a plurality of holes or openings 424 to allow air to pass freely through the evaporator and associated refrigerant paths 214.

[0168] Fig. 12a shows the storage portion 3 separately. The storage portion 3 is similar to known hot water storage portions, such as hot water cylinders, comprising an internal tank (not visible) configured to hold water (to be heated) and an insulated housing 303 configured to retain the heat within the tank to reduce energy loss. Although cylindrical shaped storage portions are typical the cross-section does not have to be circular. Square, oval, or other shapes may be used as required. Typically, a storage portion comprises top and bottom ends with a continuous side wall located between them. However, the side wall may have a plurality of sections.

[0169] In the modular system shown without heat pump 2 the storage portion 3 can act as a

typical hot water system, particularly in arrangements where a heat pump 2 is not connected. Water enters the tank through cold water inlet 304 and hot water may be drawn out through hot water outlet 306. Further inlets and/or outlets may be available, for external heating or multiple connection systems. At least one, and preferably two, or at least two element mounts 301, 302 are located on the tank, typically on the side wall of the tank. In prior systems these are configured to allow heating elements, such as electric immersion elements, to be inserted into the tank. A suitable heating element may include a four-bolt flange that can be attached to the element mounts.

[0170] As shown in Fig. 12a one of the element mounts (in this case upper element mount 301) is repurposed as a tank connector mount. The tank connector 330 provides connections for the transfer of water to and from the tank. For example, to an associated heat pump 2. The connection through the element mount provides access to within the tank without altering the structure of the tank and is easily installable. The required electrical harnesses can also be arranged between the lower element mount 302 and the heat pump.

[0171] An opening 4, optionally with a lid 41 is located on the upper surface 310 of the storage portion 3. The opening 4 is may be at, adjacent or near the outer perimeter of the storage portion 3, although other positions are possible. The opening 4 is preferably aligned with the position of the upper element mount 301. The opening 4 may be configured to allow electrical and/or water connections between the storage portion 3 and the heat pump 2. However, it is also possible that other heating devices could be similarly connected through opening 4, such as a hydraulic heat transfer module. The opening allows 4 the water conduits and/or the electrical conduits to pass thought the insulation surrounding the tank, reducing heat loss and preventing damage.

[0172] Fig. 12a shows the storage portion 3 having an upper surface 310 which is suitable (i.e., structurally able) to support a heat pump 2, allowing a modular system. Alternative locations for the heat pump 2 are possible including remote monitoring. The upper surface 310 has a mount, such as lip 320, to secure the heat pump 2 on the storage portion 3. The upper surface 310 may also have a guide to align the heat pump 2 relative to the storage portion 3. The guide may be a separate feature the mount, or they may be combined. In some case the guide has a tolerance, to allow provide some flexibility in the alignment of the heat pump 2 for installation. The heat pump 2 may be secured in place with fasteners, such as screws, self-drilling screws, or bolts. For example, fasteners may secure the heat pump 2 against the lip 320. The guide may alternatively be provided by alignment features located on the upper surface 310, such as protrusions or recesses configured to engage with corresponding protrusions or recesses on the heat-pump 2 when properly aligned. Fig. 12a shows a dip tube 340 extending from upper element mount 301, this allows water to be drawn from the

bottom of the tank to the heat pump.

[0173] Figs. 12b to 12f shows aspects of the storage portion 3 in more detail. In particular, the upper element mount 301 and lower element mount 302 are shown with covers removed and the opening 4 has the lid in the open position and with connections.

[0174] Fig. 12b shows the upper element mount 301 which has been replaced with a tank connector 330. In this example the hot water system 1 is operating with a heat pump connected, so the water connectors 321, 323 are closed with caps or covers 324. The tank connector 330 is bolted to the upper element mount 301 by bolts 601. Other methods of securing the tank connection flange are also possible. The tank connector 330 may have an alternative shape if required to mate with a different element mount 301. The tank connector 330 may be a flange. It may be moulded, forged, or machined from brass, stainless steel or reinforced plastic or other suitable material to resist the pressure of water from the tank. The tank connector 330 provides a fluid connection for the inlet and outlet flow paths to heat pump 2. The dip tube 340 is shown extending from the tank connector 330.

[0175] Fig. 12c shows the tank connection 330 with water conduits 211, 212 connected. Fig. 12c shows the inlet conduit 212 attaches horizontally while the outlet conduit 211 attaches vertically, this helps avoid misconnection as well as providing additional space in the constrained area of the tank connector 330.

[0176] Fig. 12c also shows the electrical harnesses 350, such as cabling or electrical connections, passing through the upper element mount 301. The electrical harnesses may extend from the lower element mount 302. This allows a single point of electrical connection to be made to the combined hot water system, while enabling power to pass to the heat pump 2. The electrical harnesses 350 may pass through a conduit between lower element mount 302 and the upper element mount 301 mounts. The tank connector 330 is shown secured to the upper element mount 301 by four bolts such as the four bolts 335.

[0177] Fig. 12d shows a lower element mount 302 and the associated wiring layout and control equipment. In some cases, the lower element mount 302 provides a back-up heating element 311, for situations where there is an issue with the heat pump 2. The heating element 311 may be a typical electrical immersion element, or other heating element attached in the known way. A controller 312 may be arranged in the lower element mount 302 to control the operation of the hot water system 1, or at least storage portion 3. The controller 312 may comprise a small PCB. The controller 312 may be configured to allow local or remote operation of the heating element and/or the heat pump 2.

[0178] Electrical connections 314, 315 are arranged between the controller 312 and the element 311. These include power (live) 314 and neutral 315. Power source 318

supplies power to the system. The control wires 44 and heating wires 45 are connected to the controller 312 and/or the power source 318. These combine as electrical harnesses 350 then extend between the tank and housing (i.e., through or around the insulation) to the upper element connection 301 and/or the heat pump 2. The controller 312 may also be in connection with at least one thermostat or temperature sensor to determine a temperature of the water in one or more positions in the tank. Power may be received through power connection 820.

[0179] Fig. 12e shows the opening 4 with lid 41 open in detail. Alternative openings may be used, but advantageously the lid 41 opens upwards and the heat pump 2 is configured to have a space in the area of the opening 4 wherein the lid 41 can remain open with the heat pump 2 attached to the water storage portion 3. The lid may have a clip or securing means 42 such as the protrusion and hole as shown. In some cases, the opening 4 is divided or split into two, or more, sections. This may form two sections of the housing. The two sections may be separated, for example by a protrusion 43 configured to separate water conduits from the electrical harnesses. The protrusion 43 may also be configured to allow the electrical connectors to fold over it (for example, in a 180-degree U shape) as shown in Fig. 12e. The means that, when the top cover is secured for shipping, the electrical harnesses are secured to the top of the housing, so they do not fall back into the cavity below., Arranging the opening 4 on the upper surface 310 near the outer edge enables an installer to have easy access to the opening when installing and/or removing the heat pump 2 on top of the storage portion 3. This reduces the complexity and time taken to install the heat pump module.

[0180] Fig. 12f shows the opening 4 when the heat pump 2 is sitting on, or attached to, storage portion 3 (when the outer wall 205 is removed). The electrical harnesses 44, 45, 444, 445 are shown connected, electrically connecting the heat pump 2 and the storage portion 3. The water connections are not shown. In some cases, the electrical harnesses have connectors 443 such as plugs on either end to allow ease of connection without the use of tools. Fig. 12f shows two harnesses may be used, one at low voltage for control wiring (control wires 44) and the other at mains voltage to supply power 45 to and from the heat pump 2. Alternatively, a single electrical connection or harness may be used to reduce the number of connections. The power wires 45 may be at a relatively high voltage (e.g., mains voltage). Plugging the electrical harnesses 44, 45 through opening 4 permits a simple, fast connection to me made without the use of tools. This provides additional modularity because once the storage portion 3 is connected the electrical harnesses of the heat pump 2, for example by the two sets of connecting plugs as shown. Alternatively, in a single electrical harness and connector set is used to make the electrical connection. This modified embodiment requires all of the conductors and associated control equipment to be designed for AC power.

[0181] Fig. 13 shows the heat pump 2 of Fig. 3 with the water conduits 211, 212 connected to the tank connector 330 and the dip tube 340 extended into the tank. The storage portion is not shown, and parts of the heat pump have been removed for visibility. The water flow path in the heat pump 2 was described above with respect to Fig. 7. The water flow path in storage portion 3 is now visible as water is drawn in through the dip tube 340, passes through the tank connector 330 into the water inlet conduit 211 passes into water pump 261 through a horizontal connection, is passed downwards, through the base of the heat pump 2 into the heat exchanger 270, before leaving the heat exchanger vertically and passing through water outlet conduit 212 back to the tank through the connection 330. This routing means a single entry to the tank is required (tank connector 330) with both inlet and outlet passing through. The arrangement and direction of connection of the pump also provides a short water flow path and allows the heat exchanger 270 to be positioned in the base of the heat pump 2. Fig. 13 also shows the conduits 289 for carrying refrigerant through the heat pump 2.

[0182] Fig. 14 is an exploded view of a tank connector 330. The tank connector 330 has connections on both sides. Outside of the tank there are connections for an inlet and outlet water conduits 211, 212. The outside may have a further connection to allow a sensor to be placed in the tank. The inside of the tank connector may have tubes for controlling the flow of water into or out of the tank, such as a dip tube to draw water from the bottom of the tank.

[0183] The external connectors are configured to connect to the water conduits as shown previously, so that the water conduits are connected to openings through the tank connector 330. The connectors 321, 323 are threaded to allow connection, although other connection types may be used. The connectors 321, 323 may be opposite threaded to avoid incorrect assembly. The connectors are shown with caps or covers 324 which, with o-rings 723 may seal the connectors when not in use. The o-rings 723 may also be used when the water conduits are connected. The internal side of the tank connector 330 may be simple openings but, as shown, may have fittings to improve water flow. Dip tube 340 may be used to extend the inlet towards the bottom of the tank so as to drawer colder water. The dip tube is shown connecting to a dip tube connection pipe 750 which extends between the tank connection 330 and the dip tube 340. This straight pipe allows for simpler connection. The outlet may also have an outlet pipe (341, shown in Fig. 1). This may guide or direct the water reentering toward the top of the tank.

[0184] Sensor housing 770 or sensor pocket extends into the tank on the internal side of the tank connector 330. An o-ring 771 may be used to seal this appropriately. A sensor may be passed through opening 710 to sit inside the sensor housing 770 and, for example, measure temperature. The tank connection 330 may use a seal 731 which is

compressed between the tank connector 330 and the side of the tank when the tank connector is in mounted. As shown the inlet and outlet connectors 323, 321 extend in different directions, with an elbow on the inlet connector to change its direction.

[0185] Fig. 15a shows the connection of one type of a water conduit 211 to the tank connector 330. The water conduit is a braided water house with a fitting comprising a connector 322. The connector has a loose knurled nut to make finger tightening easy. Other configurations are possible.

[0186] Fig. 15b shows detail of the connector when installed. The cut-away view shows an inner wall of the water conduit connector 322 sliding inside the connector 323 and the knurled nut having an inner thread which engages the thread on the outside of the connector 323. Other connector types may be used.

[0187] The heat transfer tube 271 may be a double walled heat transfer tube (i.e., having two walls between the refrigerant and water). The heat transfer tube has an inner tube which is corrugated or grooved or has raised ribs to increase the turbulence of the flow and increase the water side heat transfer coefficient. The intermediate wall is a tube with at least a smooth inner wall which may be reduced or crushed onto to the inner tube. The grooved outer wall of the inner tube and the smooth inner wall of the intermediate tube form a spiral or helix path or drainage groove along the outside surface of the inner tube. The drainage groove exits at both ends of the heat exchanger, thus forming a vent pathway for leaked refrigerant or water to escape depending on where a failure may have occurred. An outer tube is then placed around the intermediate tube to form the heat exchanger cross section assembly.

[0188] A variety of types of intermediate tube can be used. In the simplest embodiment a smooth tube is used. Where enhanced performance is desired, an intermediate tube with a smooth exterior and a roughened exterior may be used to increase the refrigerant side heat exchange. Tubes that have an enhanced surface can be used. The outer tube may be a smooth tube. Performance may be enhanced by dimpling or placing grooves in the exterior after assembly as desired. In use the water flows within the inner tube and the refrigerant flows between the intermediate tube and the outer tube.

[0189] Fig. 16 shows an integrated version of the heat pump 2 and storage portion 3. Externally this appears similar to the modular version as shown in Fig. 2. In some cases, the heat pump 2 is factory assembled to the storage portion 3 and can be disconnected by a technician for service and/or at end of life. This may result in considerable cost savings by reducing the need for additional electrical connectors and controls. In other cases, the heat pump 2 is no longer removable from the storage portion 3. Handles 201 may optionally be present to allow movement of the unitary system. The heat pump 2 and storage portion 3 may be permanently connected. The insulation surrounding the tank in the storage portion may extend up to the heat pump 2 and, for example,

surround the heat exchanger. This may prevent heat loss. Optionally the modularity is retained by the use of the modular heat exchanger/insulation concept. The water conduits may pass through a passageway in the insulation between the tank connector in the upper element mount 301 and the heat pump 2. Similarly, to the modular version the water conduits are able to transfer water to the heat pump and allow disconnection at the tank connector and/or the heat pump 2. The connections may be hand adjustable. This allows the heat pump 2 to be easily connected if desired. The heat pump 2 may have any of the features as describes previously.

[0190] Fig. 17a and 17b shows differences in heat exchanger 270 insulation 272 that may be present in modular and unitary system. Fig. 17a shows, through a cutaway in the wall 205 of the heat pump 2 the boundary between the heat pump 2 and storage portion 3. The insulation 272 is formed below the base 470 of the heat pump. The insulation 272 of interlocking panels 273 surrounding the heat transfer tube 271. They may be supported by brackets (not shown). A lower surface 801 may protect the insulation or provide a mating surface with the storage portion. This arrangement may be used in a unitary system. However, Fig. 17b shows an alternative arrangement that simplifies a unitary system, because it is not necessary to separate the heat pump 2. The insulation 272 surrounding the heat transfer tube 271 is an extension of the insulation 450 surrounding the water tank 451. This removes any gap or reduces any leakage at or between the insulation border. The heat exchanger tubing 271 is still located below the heat pump base 470, but may now sit in, and be supported by, the insulation moulds, instead of requiring brackets.

[0191] Top Vent: Figs. 18a and 18b show the airflow through the top venting heat pump as shown in Figs. 2 and 16. The air flow to the evaporator enters through the side wall 205 of the heat pump and exits through the upper surface 221, past grill 406. The impeller 207 is arranged vertically in the impeller portion 404 of the heat pump with the divider 281 arranged to allow a maximum impeller 207 diameter while providing space for the compressor 290 and other components in the compressor portion 405.

[0192] Side Vent: Fig. 19a and 19b show unitary and modular versions of a side venting heat pump. The overall shape and connectivity may have the features as described with respect to the top venting heat pump. However, Figs. 20a and 20b show variations in the air flow through the system. Air still enters through side wall 205, however it now exits through the side wall 205 on the opposite side of the heat pump 2. The evaporator 280a is planar. The evaporator 280a arrange at or near the central diameter of the heat pump 2. This provides a maximum area for the evaporator 280a in this air flow configuration. In some cases, the evaporator 280a may be curved. The planar evaporator 280a may be located near or substantially at the central axis (or along a diameter) of the heat pump 2. The impeller 207 may be an axial fan configured to allow airflow to

flow from one side to the other

[0193] The planar evaporator 280a is mounted perpendicular to the airflow direction. A suction header, distributor tube and tubes may be arranged in the compressor portion 405, separated by divider 281. To accommodate the end of the evaporator 280a the divider 281 may be formed by two pieces or may have a slot to allow the evaporator end 282 to pass therethrough. The heat pump base 470 may provide support to the evaporator 280a. The heat pump wall 205 may also provide support at the distal end of the evaporator 280a. The base 470 may be sloped slightly away from the evaporator 280a to facilitate draining of excess condensate or other water.

[0194] The evaporator portion 404 forms a plenum surrounding by the side wall 205, base 470 and upper surface 221 that enables impeller 207 to pull air through the evaporator and push it out the outlet of the heat pump. The evaporator portion may have an inner wall 410 configured to direct or improve this air flow. The inner wall 410 forms a perimeter of the evaporator portion 404.

[0195] As with the top venting heat pump various impeller types and impeller assembly types may be used such as: eternal rotor AC, External rotor EC, Brushless DC, standard induction AC type. In some cases, the impeller 207 is separate part that is assembled on to the motor shaft. With the others, the fan assembly is integrated, and may be supported by an integral flat or basket type grill. The side vent heat pump has reduced volume compared to an equivalent top venting heat pump. However, side venting minimizes ingress of unwanted materials into the fan - evaporator assembly when mounted outdoors. For example, snow ingress.

[0196] Ducted: Another variant uses an impeller 207a to force air flow more through at least one duct. The side wall 205 no longer air flow through it. Instead, inlet pass through the side wall 205 or upper surface 221. As shown in Fig. 21a and 21b inlet leads to the impeller portion 404 where It is pulled through the evaporator. The impeller 207 may be centrifugal fan that draws air through the inlet and through the outlet. In some cases, the inlet and outlet may instead be arranged on the upper surface 221 and or the side wall 205. The evaporator 280a is planar and may be similar to the side venting heat pump. The outlet is shown at the upper surface 221 of the heat pump the opposite side of the evaporator from the inlet. The airflow could be reversed, entering through the upper surface 221 and exiting through the side walls 205, or the airflow could enter and exit through opposing sides of the side wall, with the impeller 207a arranged horizontally within.

[0197] This variant is adapted for connecting to ducting for installations. This variant is typically installed indoors and allows ducting to be attached to the inlet or outlet on the upper surface 223. The outer wall 205 is solid and thus impermeable to air or water. An inner wall 410 surrounds the impeller 207a connecting to the impeller and to the

divider 281 and/or the evaporator. The impeller 207a is typically a centrifugal type, however various impeller designs may be used, including forward or backward curved types. The impeller 207a may be housed in a volute 411 which may be separate or integrated with the inner wall 410. A motor 217 is incorporated to drive the impeller 207a. The motor may be integrated with the impeller (typically ac or EC types are used) or may be separate from the impeller. If the fan motor is separate from the impeller it may be mounted on the base, the casing or into the volute or inner wall 410. The inlet and/or outlet may have ducts, or ducts may be attachable to the inlet or outlet ducts.

[0198] Other airflow variants are possible, for example variants of the ducted airflow option that allow for side or top entry / inlet of the ducts, or variants of the side vent that have differing evaporator and/ or inner wall configurations that direct the airflow in different directions to those shown

[0199] Alternative Fluids: An alternative fluid may be used as the heat source instead of air. In some cases, a fluid such as water, glycol or alcohol is used for the heat source. The heat source water may form a heat source, and enter pass into the heat pump 2, then be circulated through the refrigerant flow path. The pump and/or evaporator and/or heat exchanger may be modified to suit the alternative water. In some cases, heat sources include, but are not limited to, hydronic heating/cooling systems and fan coil units. The net cooling effect may be used or discarded to waste, in accordance with the needs of the user.

[0200] In some cases, power is provided to controller 312 at screw terminals clearly marked on the controller 312 at the lower element mount. However, the power may be supplied elsewhere in the storage portion 3, or separate power could be supplied to the heat pump 2. Electrical harnesses 350 (formed by 444, 445) form the electrical connection from the controller 312 to the upper surface 310 of the storage portion 3. Typically, one harness 45 is used for mains voltage (power) and another for low voltage (12/ 3.3V) or control 44. Alternatively, all of the power and controls or communications are combined into one harness. The single harness may be designed to operate at mains voltage. The controllers could be designed to operate at mains voltage for both communications and power

[0201] Where a modular system is used it may be advantageous to ensure the heat pump and the electrical heating element do not operate independently, or at the same time. A switch, such as a relay, may be provided. The relay may have a default closed state. The relay may be integrated with the storage portion controller 312. The relay may be configured to ensure priority is always given to ensuring the end user will have a hot water supply regardless of whether a heat pump 2 is attached to storage portion 3, or not.

[0202] Fig. 23a shows an electrical schematic for a hot water system with a relay 900. The relay 900 is arranged between the electrical power connection 445 and the heating element controller 312. As shown, it interrupts the phase connection to the controller 312. The relay switch 930 is controlled by a signal on the electrical control connection 444. As shown the switch 930 is in a closed state, allowing power to move to the heating element. However, when the heat pump is activated the heat pump controller 253 is configured to send a control signal to open the relay 900 - i.e., move it to the control line. This prevents dual operation of the heat pump and the heating element, unless specifically desired.

[0203] In some cases, further inputs to the relay, or control system may be used - such as a thermostat to determine if temperatures are too low for the heat pump to operate. As such the relay 900 allows the electrical connection of the heat pump (i.e., through connections 901, 902) to automatically allow control of the heating element in the tank 451. Possible temperatures include tank temperature upper 905 and tank temperature lower 904 which may be in communication with the heat pump controller 253 as shown.

[0204] A second switch, such as a relay 940 may be included on the heat pump controller 253. Where the controller 253 determines to operate the heating element 311 (i.e., where the temperature is too low for efficient operation, or the ambient temperature is below a predefined threshold) the controller 253 may return power from the heat pump to the storage portion to allow operation of the heating element (i.e., connecting wires 3 and 2 of electrical connection 445). This allows the heat pump controller 253 to measure the full current and/or power draw of both the heat pump and the heating element. It also allows the heat pump to provide permission to the heating element to operate. For example, permission may be granted during a heat pump defrosting cycle. This current and/or power measurement may be used to determine operation, or correct operation, of the heat pump 2 and/or the heating element. Although described as a relay other switches or circuit configurations which are normally closed but opens (or prevent use of the electric element) may alternatively be used. The current and/or power determination may be made by monitoring the power drawn through the heat pump controller 253 by the element controller 312. The heat pump controller 253 may monitor the electrical draw signals of the element controller to confirm expected operation, for instance by determining one or more thresholds that indicate different operational states of the heating element. Similarly, the element controller may detect, for example through relay 900, when electric or energy consumption of the heap pump is low and allow operation of the heating element.

[0205] In some cases, heat pump 2 and storage portion 3 may be configured to ensure only one heating system (i.e., heat pump or heating element) is operable at one time. This

ensures that the water is not over-heated and/or avoids overlap between the controller 312 in the storage portion 3 and controller 253 of the heat pump 2. A switch may be used to control or limit the operation of the heating element 311 when the heat pump is not connected. For instance, the switch could be located on the top of the storage portion 3 so that it is only activated when the heat pump is in place.

[0206] Fig. 23b shows an integrated version of the invention (i.e., with a combined storage and heat pump). In this case, the normally closed relay 900 is not required since the storage portion 3 is not designed to be operative without the heat pump 2 connected. Since the heat pump 2 is always present in this embodiment, the second relay 940 can be used to ensure power is transmitted to the element when required. Alternatively, the relay 900 may also be present to allow for end-of-life modifications, for example.

[0207] Although certain embodiments and examples are disclosed herein, inventive subject matter extends beyond the specifically disclosed embodiments to other alternative embodiments and/or uses, and to modifications and equivalents thereof. Thus, the scope of the claims or embodiments appended hereto is not limited by any of the particular embodiments described herein. For example, in any method or process disclosed herein, the acts or operations of the method or process may be performed in any suitable sequence and are not necessarily limited to any particular disclosed sequence. Various operations may be described as multiple discrete operations in turn, in a manner that may be helpful in understanding certain embodiments; however, the order of description should not be construed to imply that these operations are order dependent. Additionally, some structures described herein may be embodied as integrated components or as separate components. For purposes of comparing various embodiments, certain aspects and advantages of these embodiments are described. Not necessarily all such aspects or advantages are achieved by any particular embodiment. Thus, for example, various embodiments may be carried out in a manner that achieves or optimizes one advantage or group of advantages as taught herein without necessarily achieving other aspects or advantages as may also be taught or suggested herein.

[0208] It should be emphasized that many variations and modifications may be made to the embodiments described herein, the elements of which are to be understood as being among other acceptable examples. All such modifications and variations are intended to be included herein within the scope of this disclosure and protected by the following claims. Further, nothing in the foregoing disclosure is intended to imply that any particular component, characteristic or process step is necessary or essential.

Claims

[Claim 1] A hot water system comprising:
A storage portion (3) comprising:
A tank (451) configured to hold water, with at least two water connectors (321,323),
An insulated housing (303) configured to surround the tank (451), and
A heat pump mount on an upper surface (310) of the storage portion (3)
A heat pump (2) comprising:
A heat exchanger (270) configured to transfer heat between a refrigerant and water,
A water flow path comprising:
A water inlet (274),
A water outlet (275), and
A water pump (261) configured to circulate water between the water inlet (274), the heat exchanger (270) and the water outlet (275),
A refrigerant flow path comprising:
A compressor (290),
An expansion valve (262), and
An evaporator (280),
Wherein the refrigerant flow path is configured to heat the refrigerant and transfer the heated refrigerant to the heat exchanger (270), and
A mounting portion configured to reversibly mount the heat pump to the heat pump mount of the storage portion (3),
Water conduits (211, 212) configured to extend between the at least two water connectors (321, 323) of the tank (451) and the inlet (274) and outlet (275) of the water flow path of the heat pump (2), the water conduits (211, 212) each comprising at least one reversibly connectable water conduit connector (213).

[Claim 2] A hot water system as claimed in Claim 1 wherein the water conduit connectors (213) are located between the upper surface (310) of the storage portion (3) and the base (470) of the heat exchanger (270) and/or disposed above the upper surface (310) of the storage portion (3) and outside the outer wall (205) of the heat pump (2).

[Claim 3] A hot water system as claimed in Claim 1 wherein the water conduit connectors (213) is located beside an upper portion of storage portion (3) and below the base (470) of the heat exchanger (270).

[Claim 4] A hot water system as claimed in Claim 3 wherein the water conduits

(211, 212) extend through a base (470) of the heat pump (2), and the storage portion (3) further comprises:
An opening (4) on the upper surface (310) of the storage portion (3)
A passageway extending between the opening (4) and the water connectors (321,323), the opening (4) and the passageway configured to allow the water conduits (211, 212) to pass therethrough,
Wherein the water connectors (321,323) are accessible from the side of the insulated housing storage portion (3).

[Claim 5] A hot water system as claimed in Claim 4 wherein the opening (4) comprises a lid (41).

[Claim 6] A hot water system as claimed in any one of Claims 1 to 5 wherein the water conduit connectors (213) are configured to connect to a tank connector (330) in or mounted to the storage portion (3).

[Claim 7] A hot water system as claimed in any one of Claims 1 to 5 wherein the heat pump (2) further comprises a heat pump controller (253), wherein the controller (253) is configured to control the refrigerant flow path and the water flow path,
Wherein the storage portion (3) further comprises an electrical element (311) and an element controller (312), wherein the element controller (312) is configured to control activation of the electrical element (311),
Wherein the heat pump controller and the element controller are configured to be electrically connectable by at least one electrical connection (44,45), the electrical connection comprising at least one reversibly connectable electrical connector (444, 445).

[Claim 8] A hot water system as claimed in Claim 7 wherein the element controller (312) is configured to connect to mains electricity, and wherein the element controller (312) is configured to heat the water in the tank (451) independently when the element controller (312) is disconnected from the heat pump controller (253).

[Claim 9] A hot water system as claimed in Claim 7 wherein the storage portion (3) further comprises:
An opening (4) on the upper surface (310) of the storage portion (3) and
A lid (41) to cover the opening (4),
Wherein in a disconnected position a portion of the electrical connection including at least one reversibly connectable electrical connector (444, 445) is configured to be storable below the lid (41) of the opening (4), and

in a connected position at least one of the reversibly connectable electrical connector (444, 445) are located above the opening (4) and are electrically connectable to the heat pump controller.

[Claim 10] A hot water system as claimed in Claim 1 wherein the heat pump (2) further comprises at least one handle (201), wherein the at least one handle (201) is accessible when the heat pump (2) is mounted on the storage portion (3).

[Claim 11] A hot water system as claimed in Claim 10 wherein the heat pump (2) further comprises:
A base (470), and
An outer wall (205) that surrounds the refrigerant flow path, the heat exchanger (270) and the water flow path,
wherein the evaporator (280) is disposed above the base (470), the evaporator extending up outer wall (205) and extending around an inner surface of the outer wall (205) to cover a first portion of the outer wall,
wherein the outer wall (205) further comprises plurality of apertures on the first portion of the outer wall,
wherein the handle (201) is disposed below the plurality of apertures and is configured to support the base (470).

[Claim 12] A hot water system as claimed in Claim 1 wherein the heat pump (2) further comprises:
A base (470),
An outer wall (205) that surrounds the refrigerant flow path, the heat exchanger (270) and the water flow path, and
An impeller (404),
wherein at least the evaporator (280) and the impeller (404) are disposed above the base (470),
Wherein the evaporator extends up outer wall (205) and extends around at least a portion of an inner surface of the outer wall (205), and
Wherein the impeller (404) comprises rotation shaft extending in an upwards direction relative to the base(470) and is at least partially surrounded by the evaporator (280).

[Claim 13] A hot water system as claimed in Claim 1 wherein the storage portion (3) and the heat pump (2) further comprise a guide portion, the guide portion configured to align the heat pump mounting portion and the heat pump mount in use.

[Claim 14] A hot water system as claimed in Claim 13 wherein the guide portion

comprises:
A lip (320) along at least part of peripheral of the upper surface of the storage portion (3), and
A flange (216) along at least part of the periphery of the heat pump (2), the flange (216) configured to mate with the lip (320).

[Claim 15] A hot water system as claimed in Claim 1 wherein the storage portion (3) and the heat pump (2) have substantially the same outline in horizontal cross-section.

[Claim 16] A hot water system comprising:
A storage portion comprising:
A tank configured to hold water, the tank comprising a wall and an opening through the inner wall; and
An insulated housing surrounding the tank, and
A heat pump configured to heat the stored water,
The heat pump comprising a water inlet conduit and a water outlet conduit,
wherein the water inlet conduit and water outlet conduit reversibly connectable to the storage portion at the opening through the wall.

[Claim 17] A hot water system as claimed in claim 16 wherein the inlet flow path and outlet flow path pass through the opening through the inner wall.

[Claim 18] A hot water system as claimed in claim 16 or claim 17 comprising a tank connector configured to mount in the opening of the storage portion and fluidly connect the water inlet conduit and the water outlet conduit to the tank.

[Fig. 1]

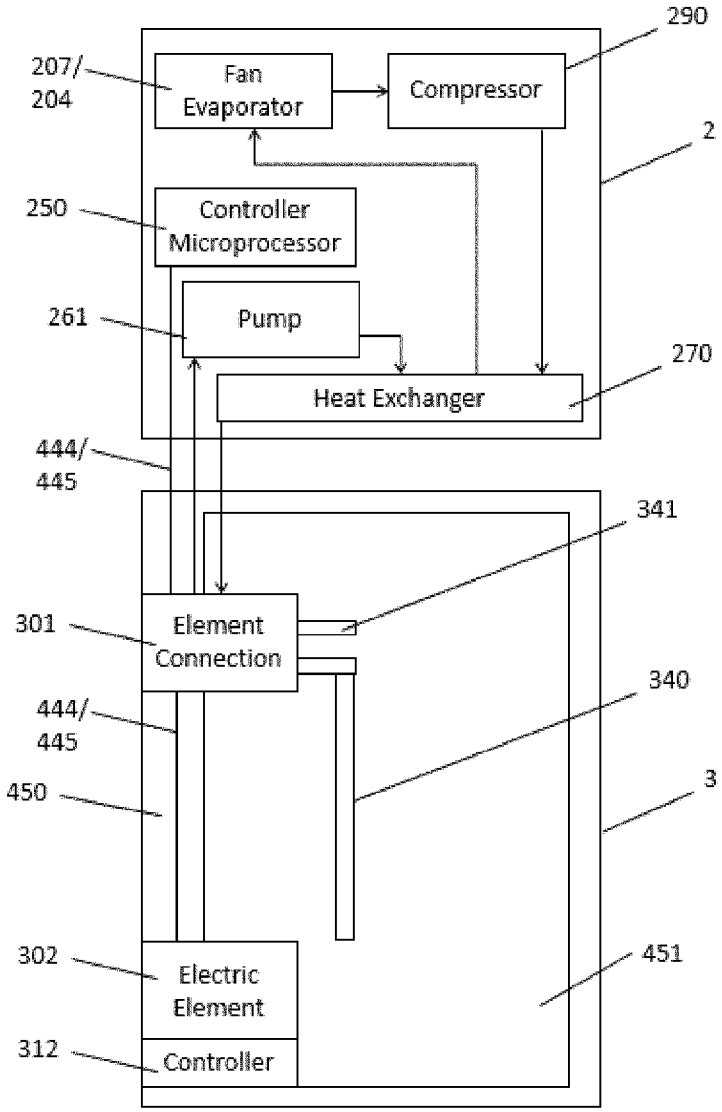
290
207/
204
Fan
Evaporator
Compressor
2
250
Controller
Microprocessor
261
Pump
270
Heat Exchanger
444/
445
341
301
Element
Connection
340
444/
445
450
3
302
Electric
Element
451
312
Controller

[Fig. 2]

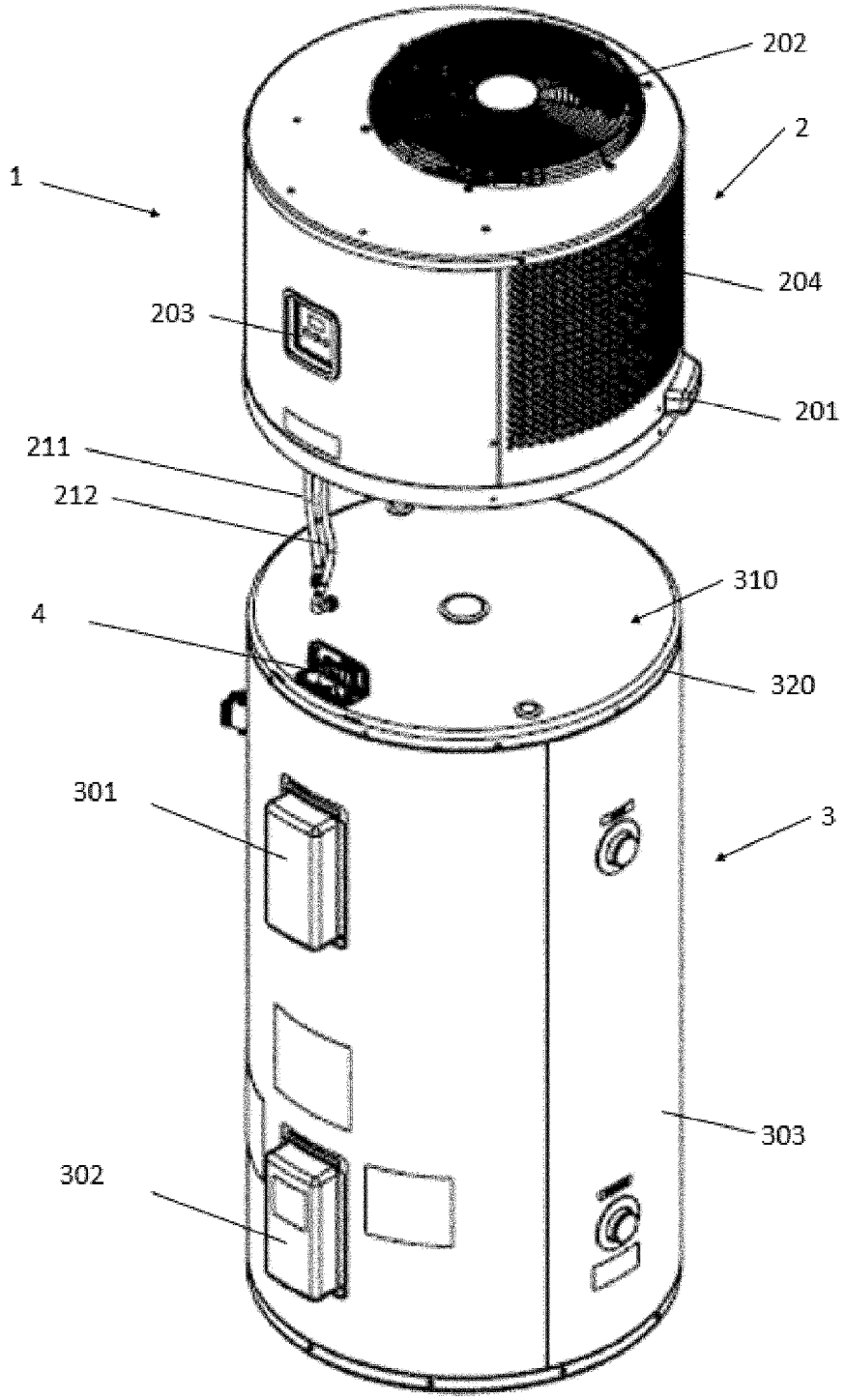

[Fig. 3]

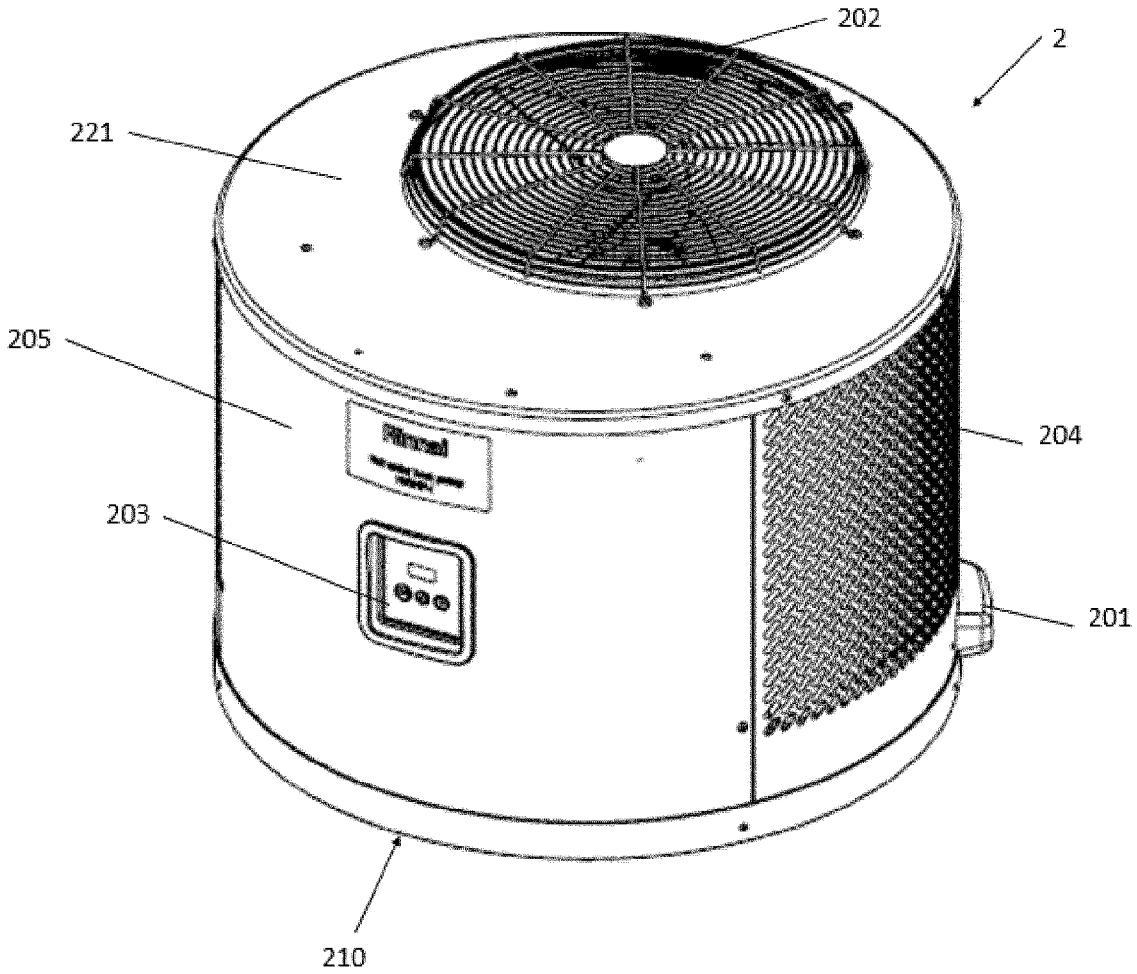

[Fig. 4a]

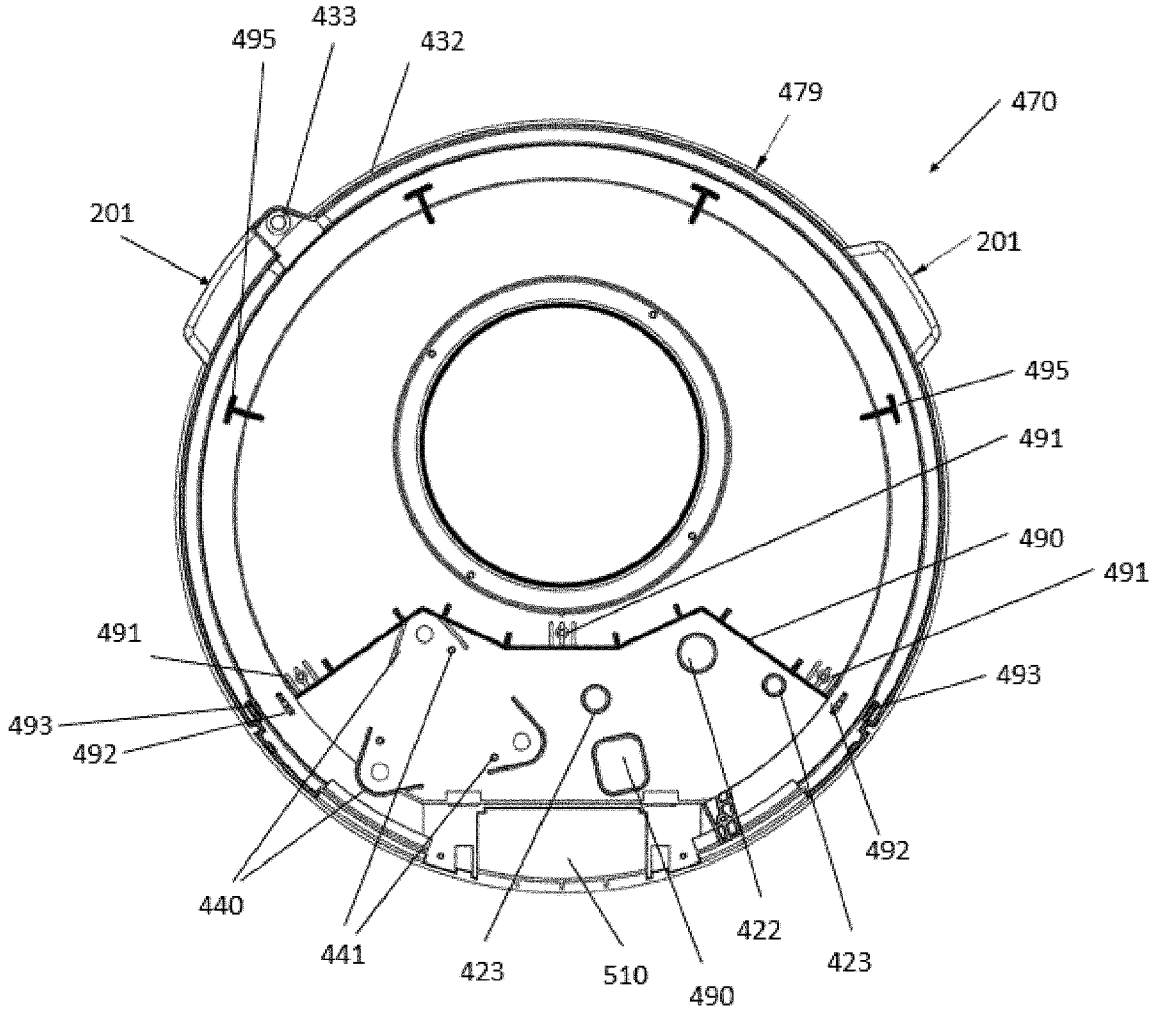
495
433
432
479
470
201
201
495
491
490
491
491
493
493
492
492
440
441
423
510
490
422
423

[Fig. 4b]

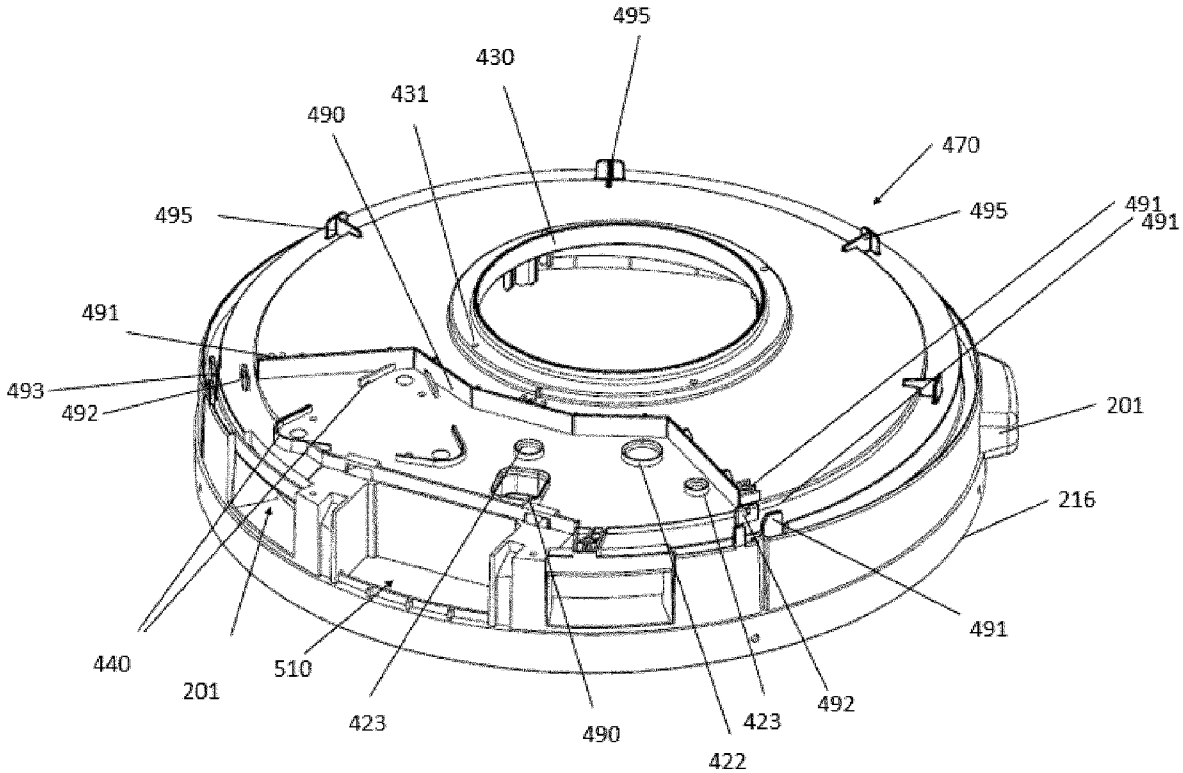
495
430
431
490
470
495
495
491
491
491
493
492
201
216
491
440
201
510
423
490
423
422
492

[Fig. 4c]

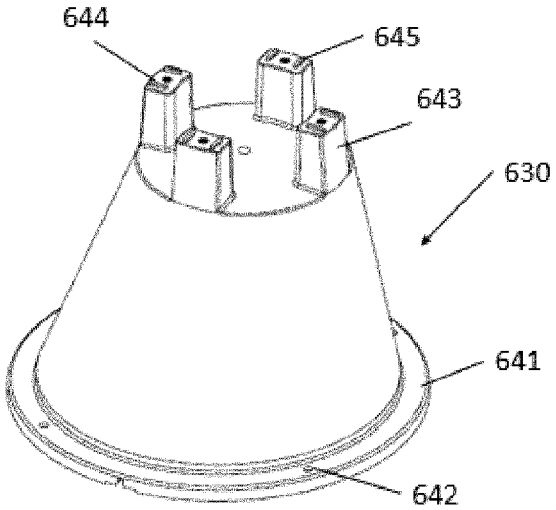
644
645
643
630
641
642

[Fig. 5]

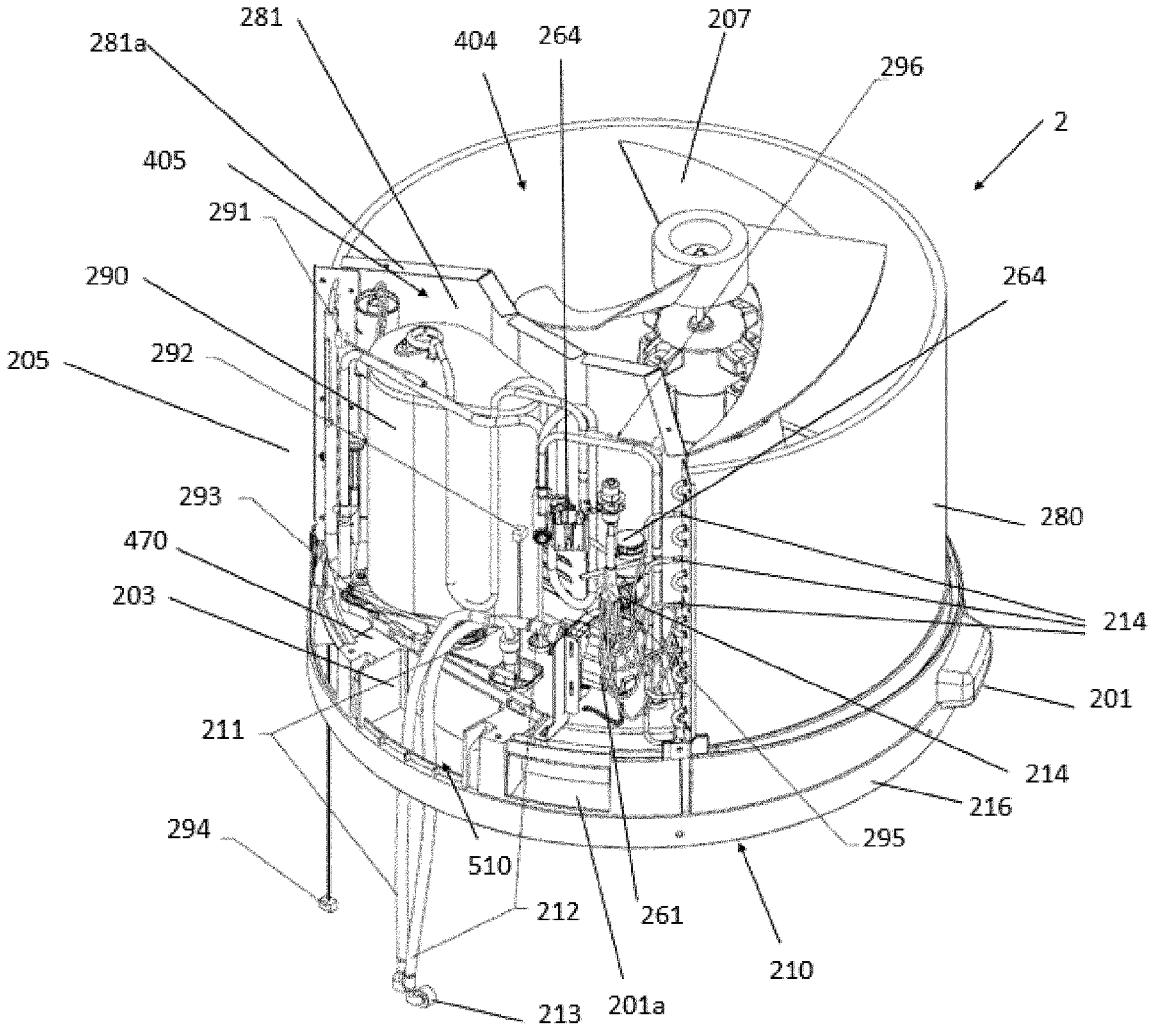
281
281a
404
264
207
296
2
405
291
290
264
205
292
293
280
470
203
214
201
211
214
216
294
510
295
212
261
210
213
201a

[Fig. 6]

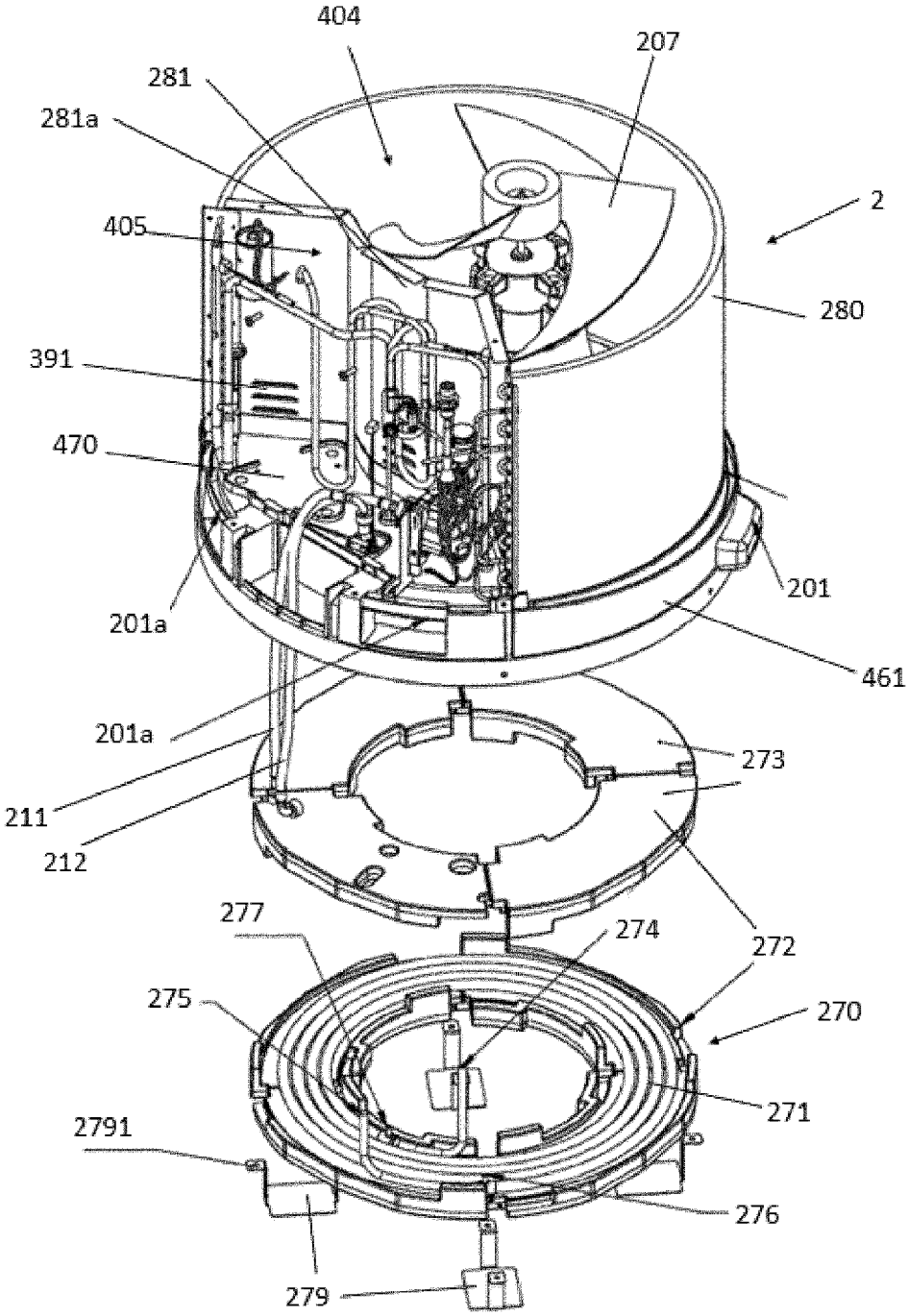
404
207
281
281a
2
405
280
391
470
201
201a
461
201a
273
211
212
277
274
272
275
270
271
2791
276
279

[Fig. 7]

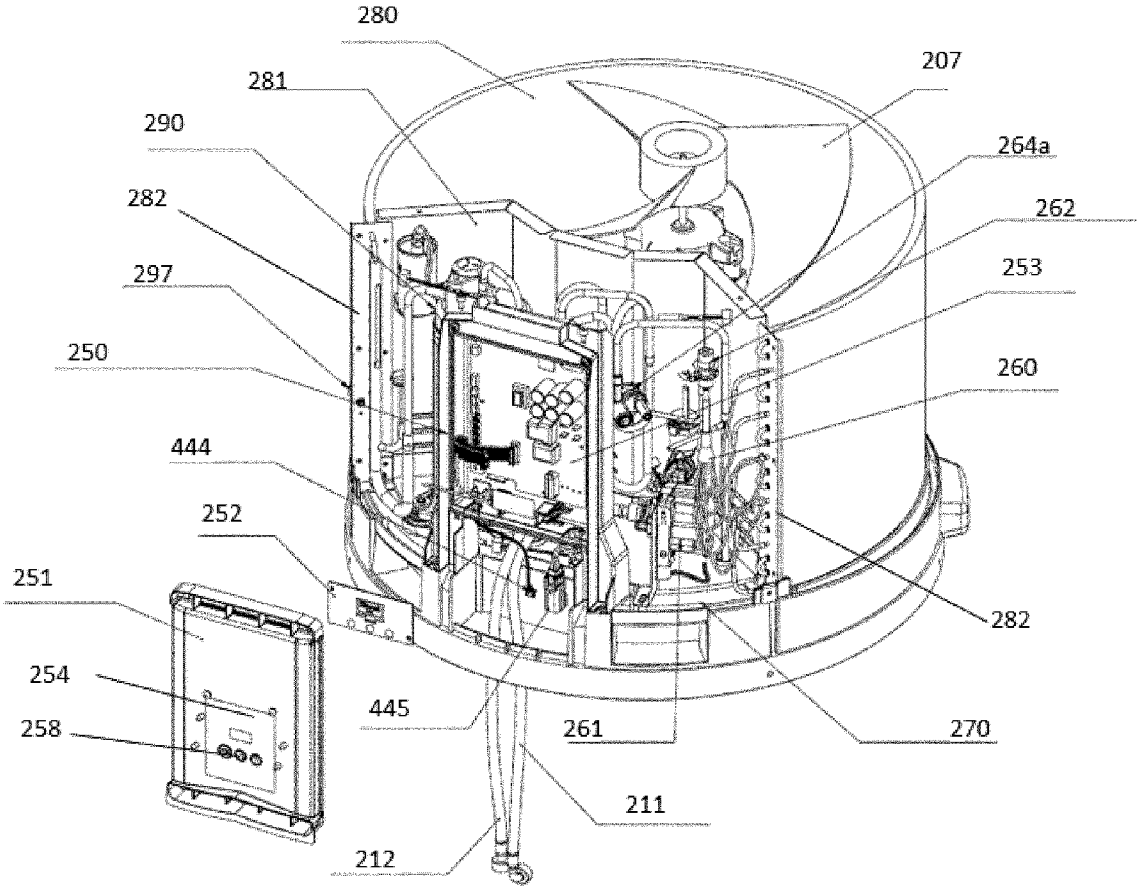
280
281
290
282
297
250
444
252
251
254
258
207
264a
262
253
260
282
445
261
270
211
212

[Fig. 8]

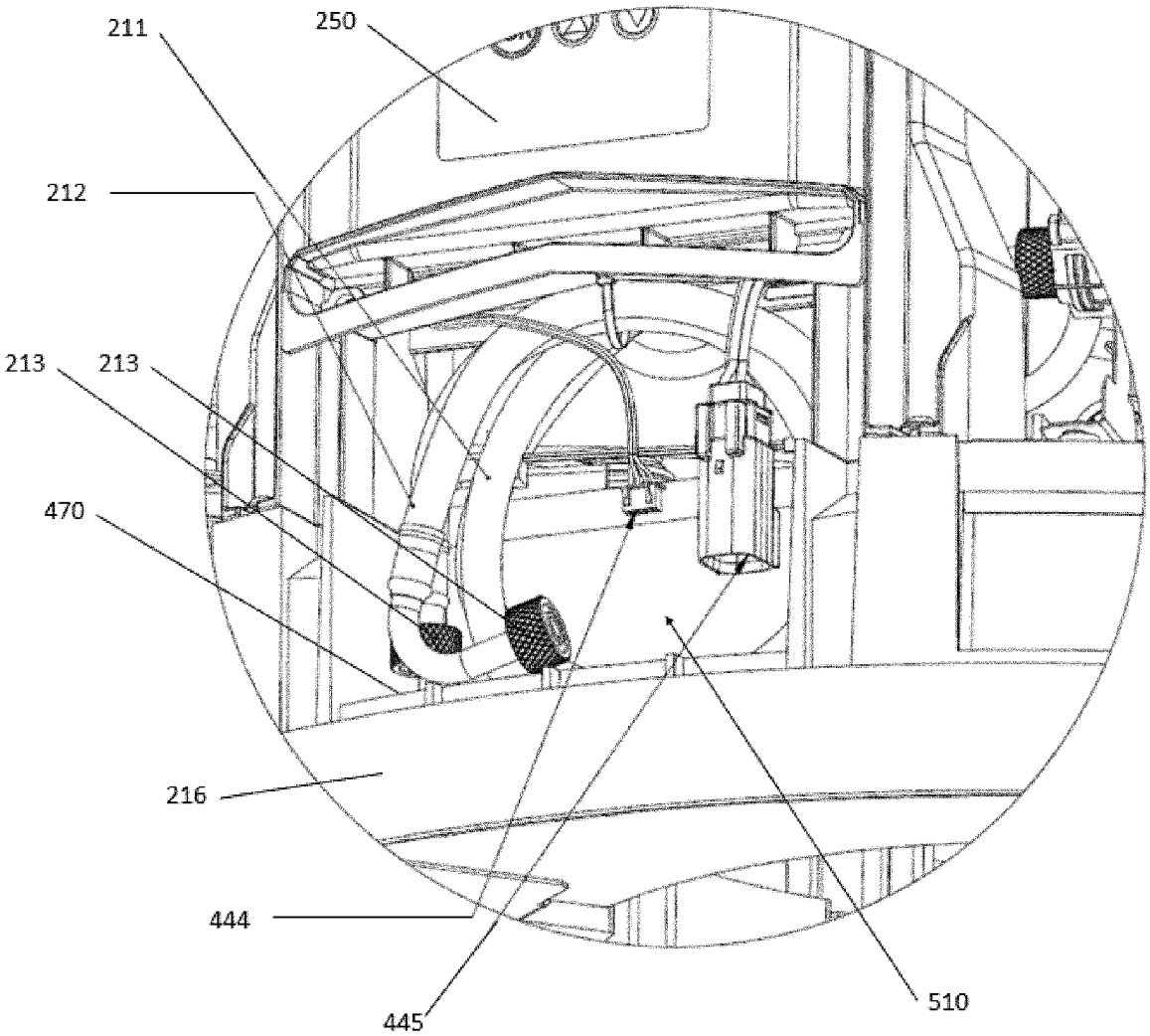
211
250
212
213
213
470
216
444
445
510

[Fig. 9]

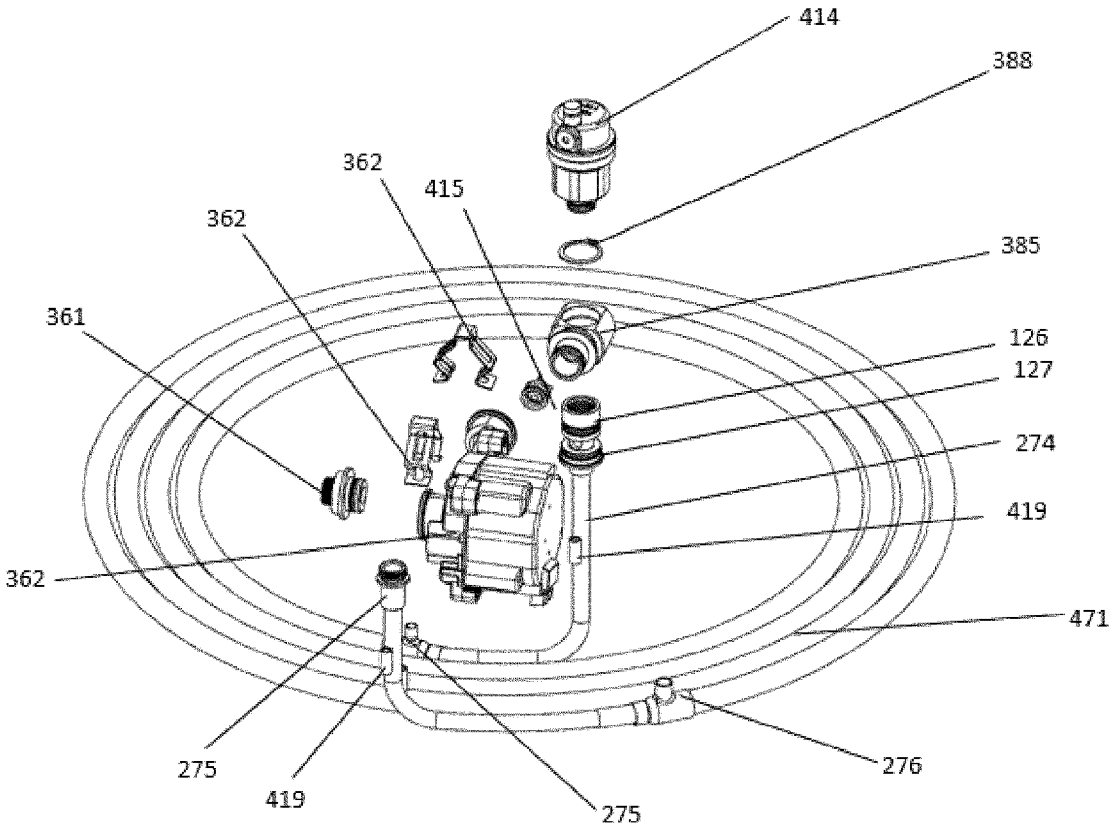
414
388
362
415
362
385
361
126
127
274
419
362
471
275
419
275
276

[Fig. 10]

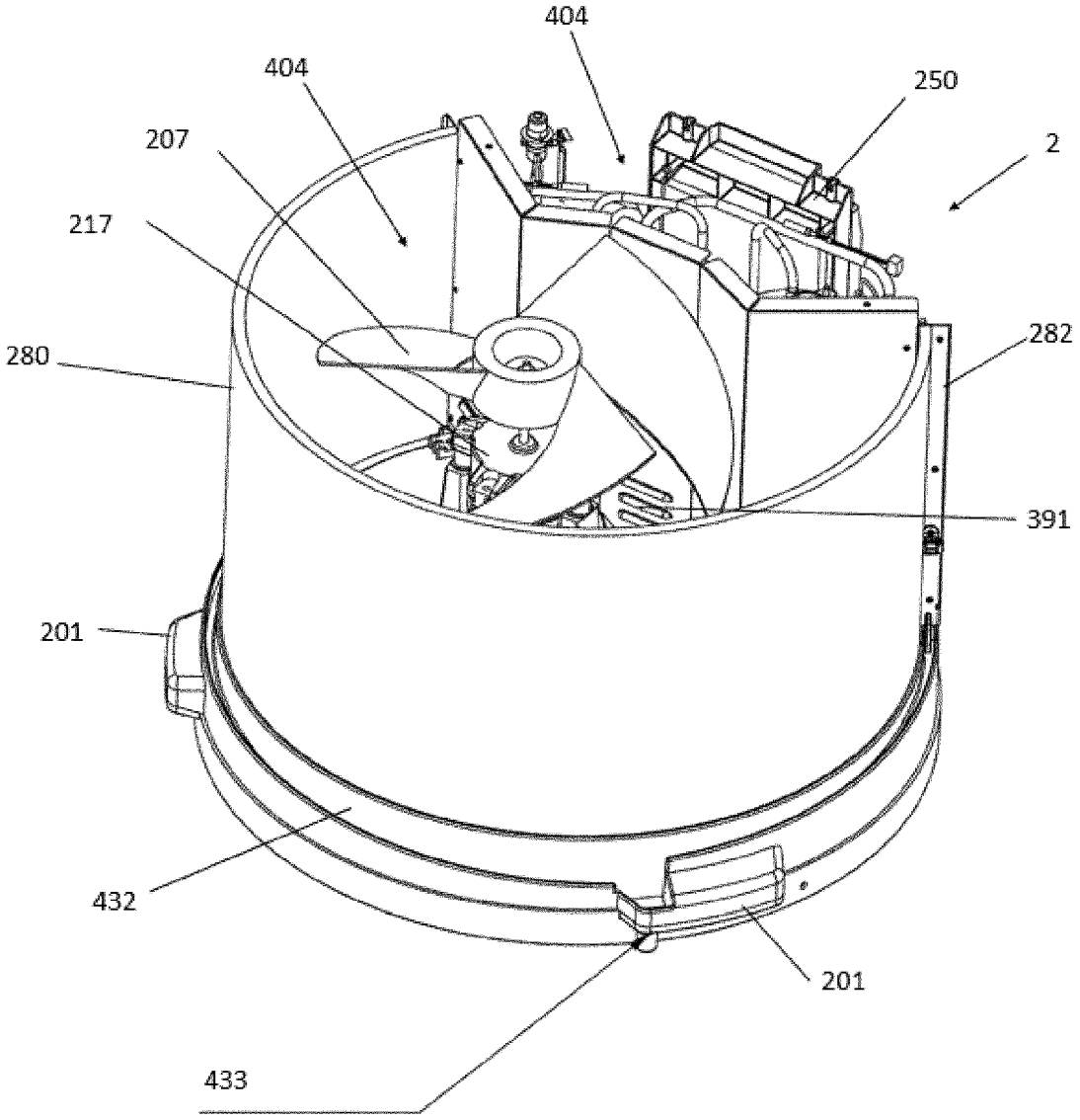

[Fig. 11]

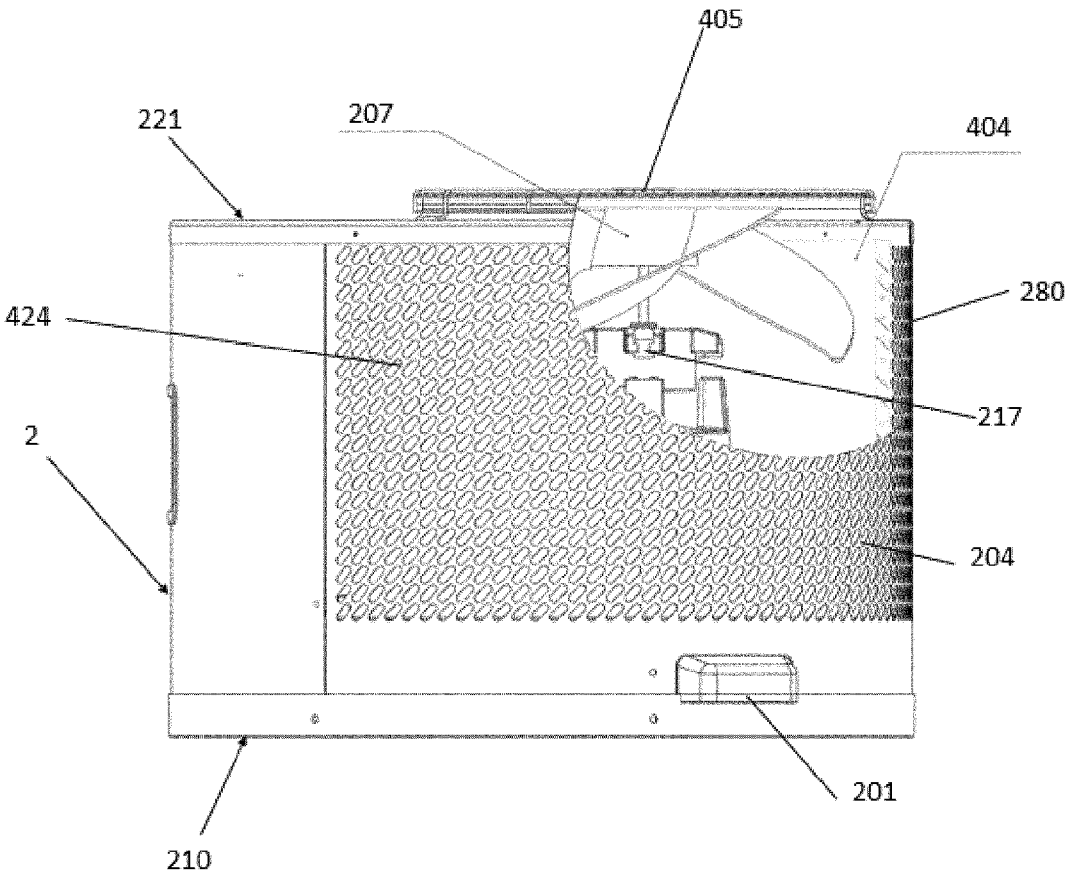

[Fig. 12a]

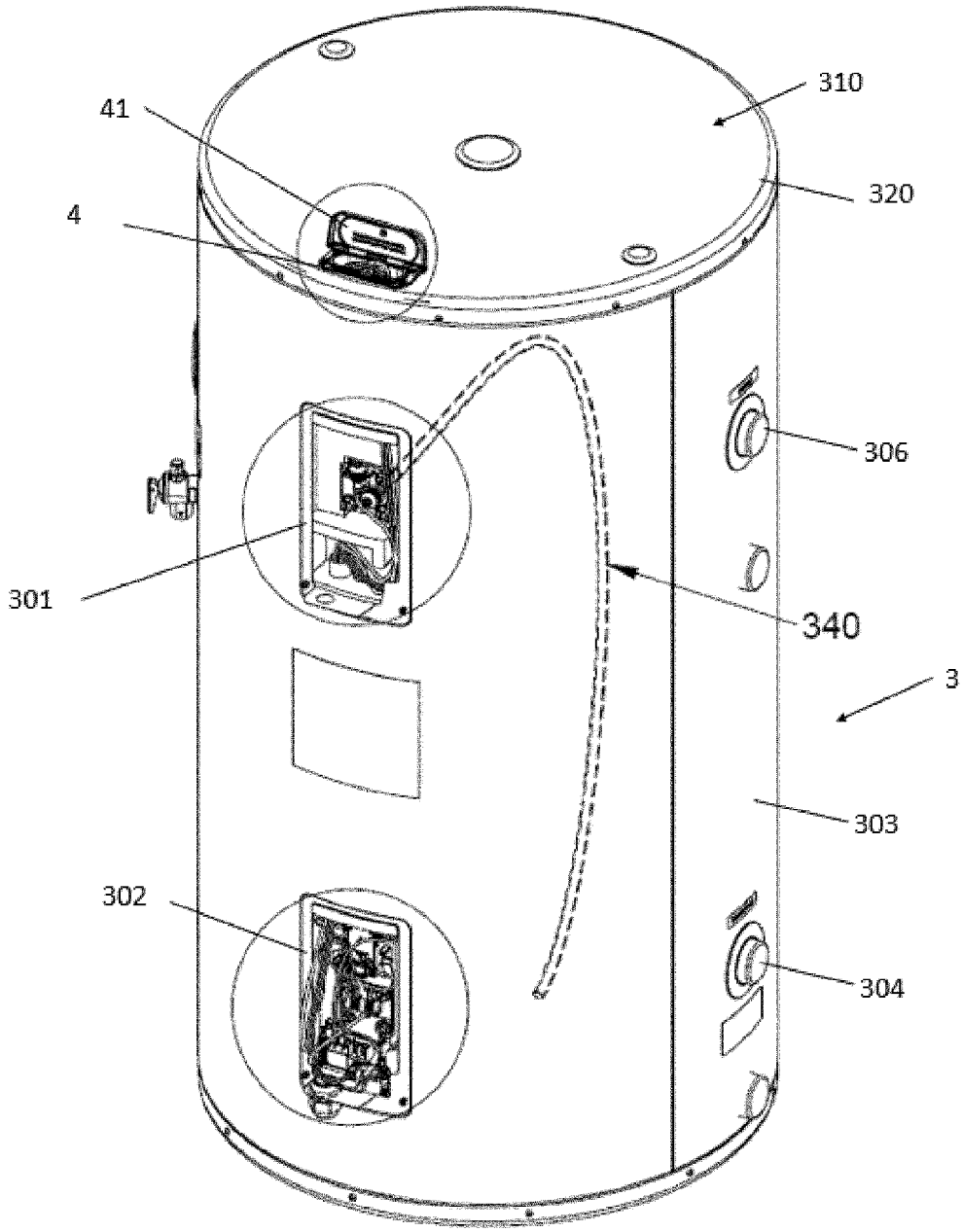

[Fig. 12b]

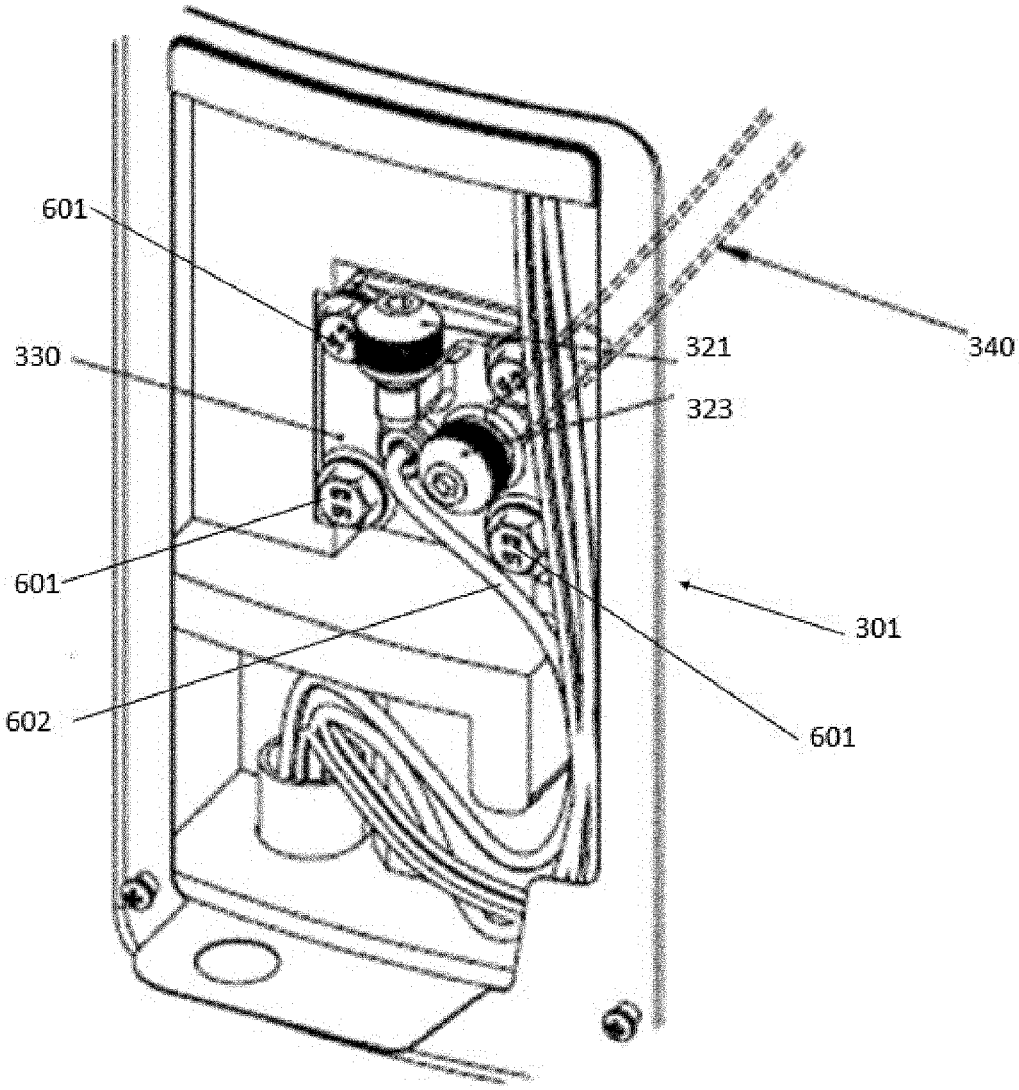

[Fig. 12c]

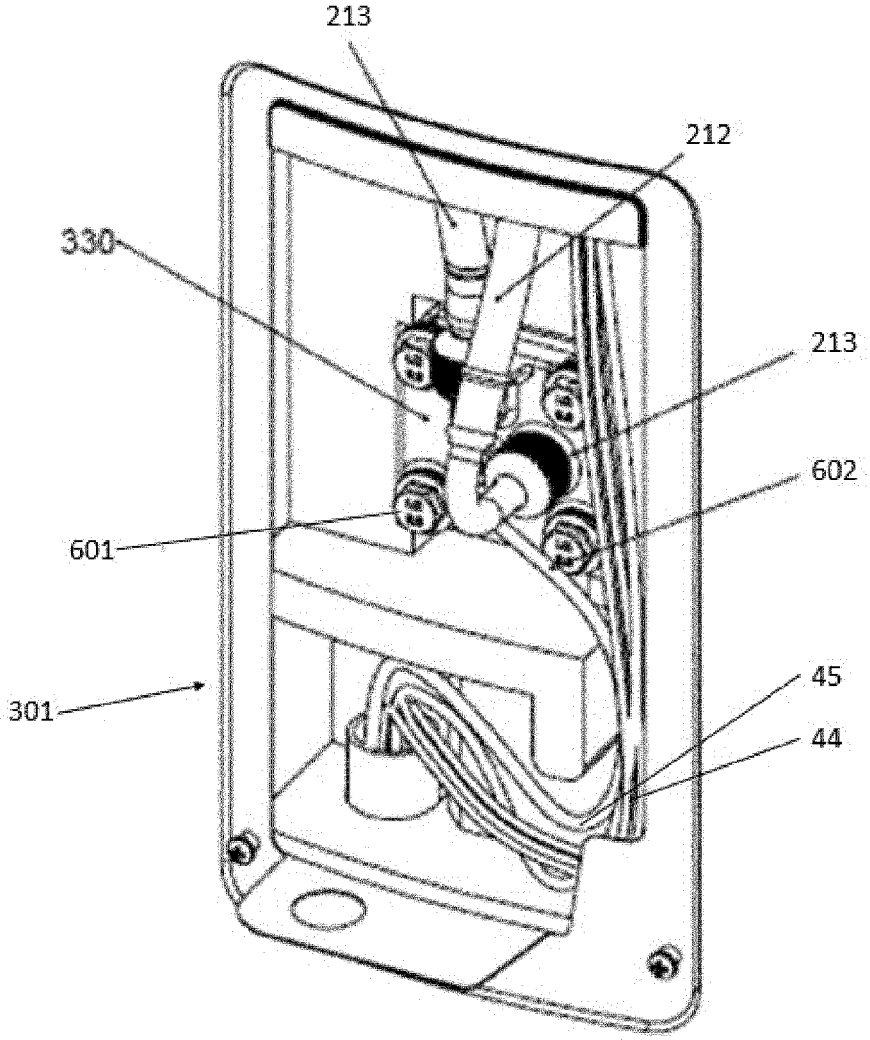

[Fig. 12d]

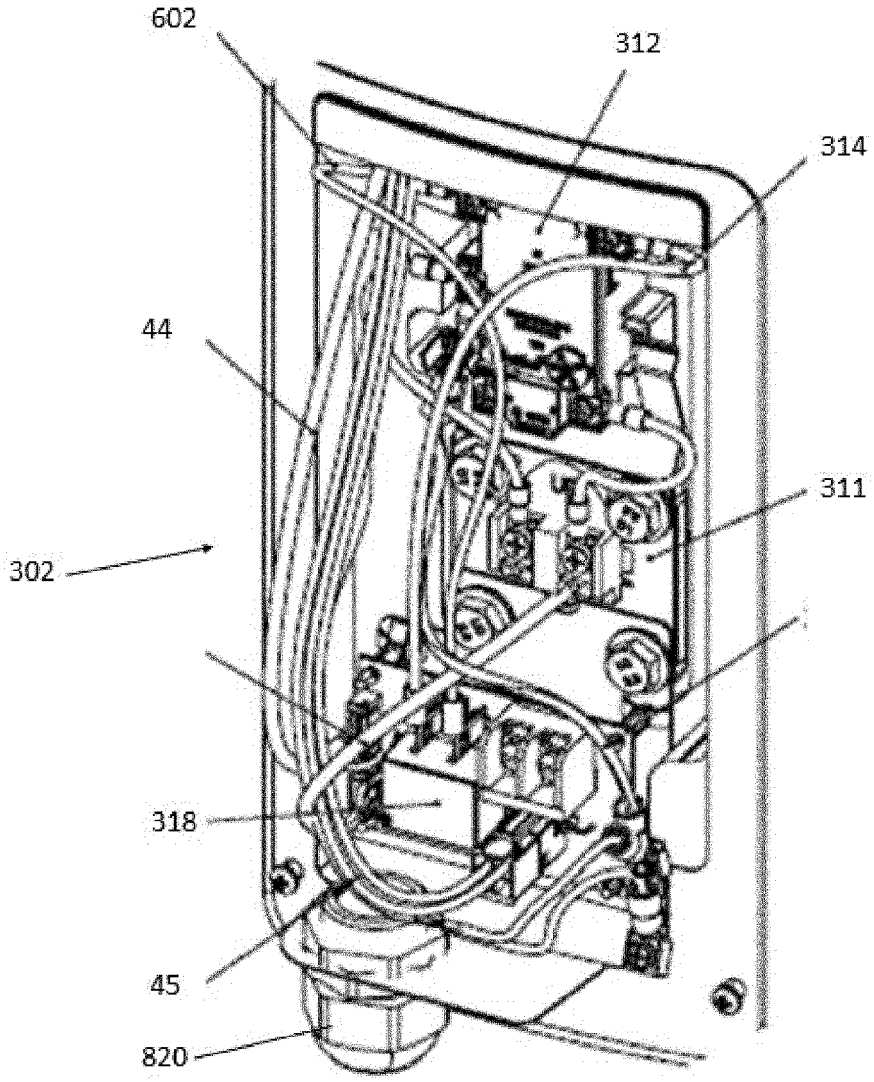

[Fig. 12e]

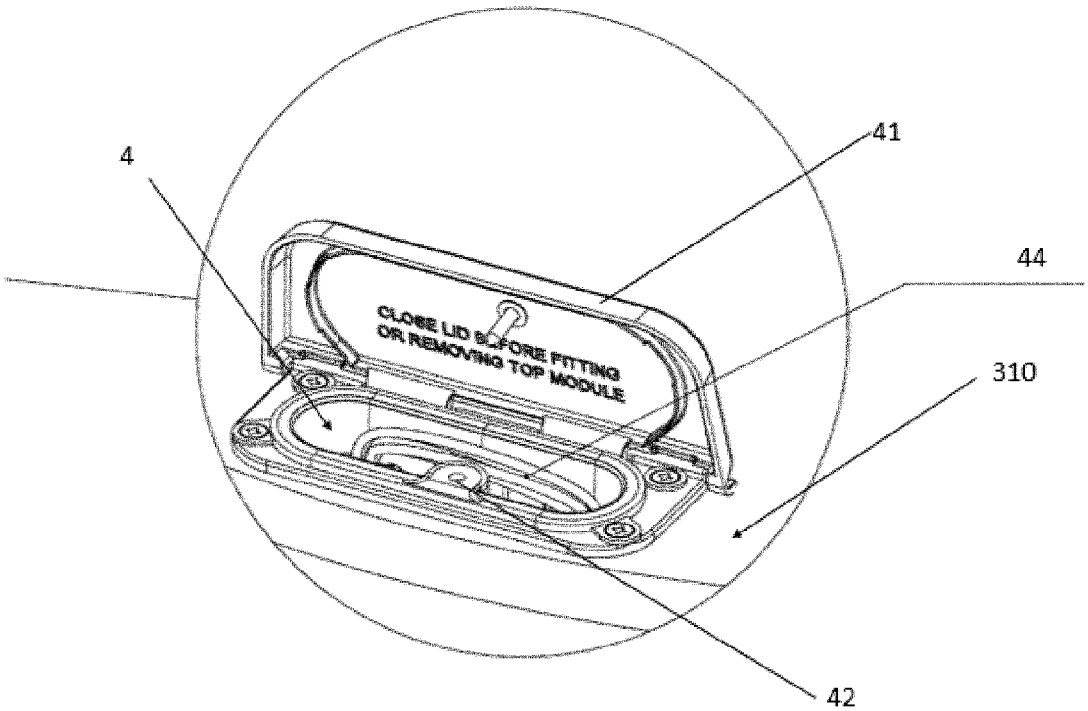

[Fig. 12f]

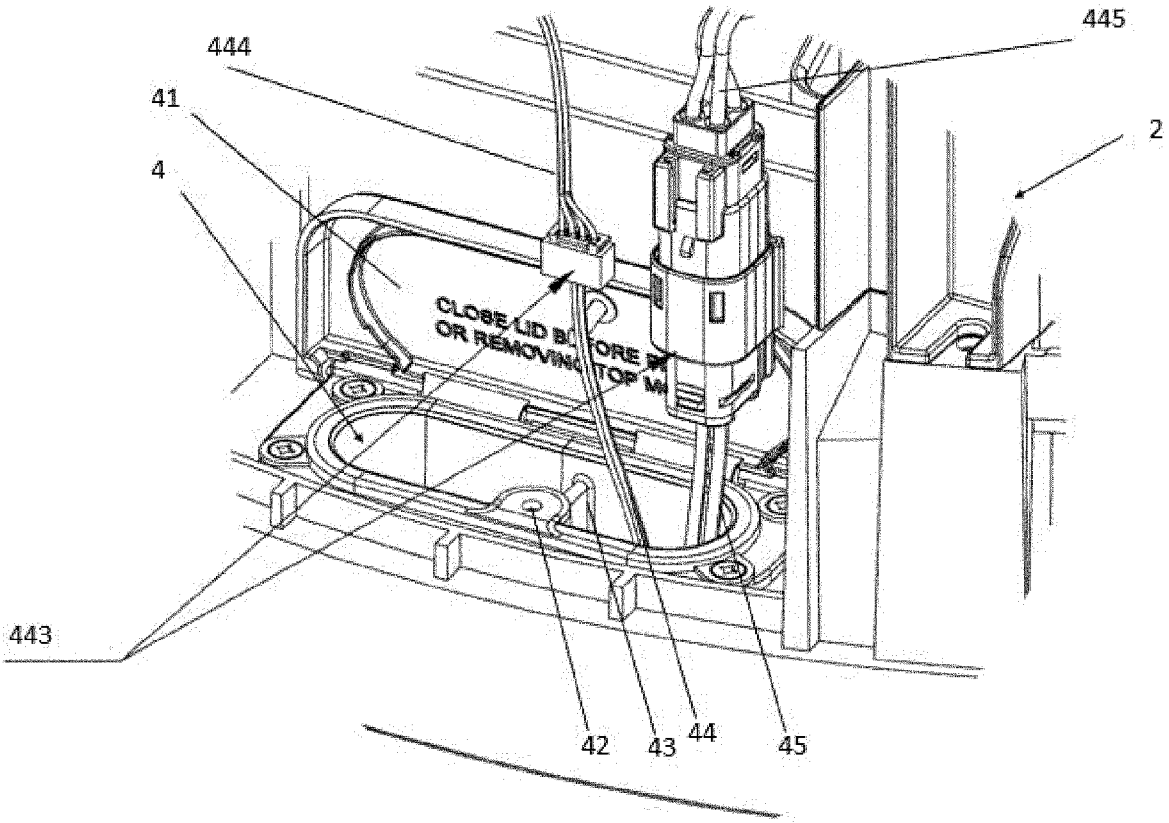

[Fig. 13]

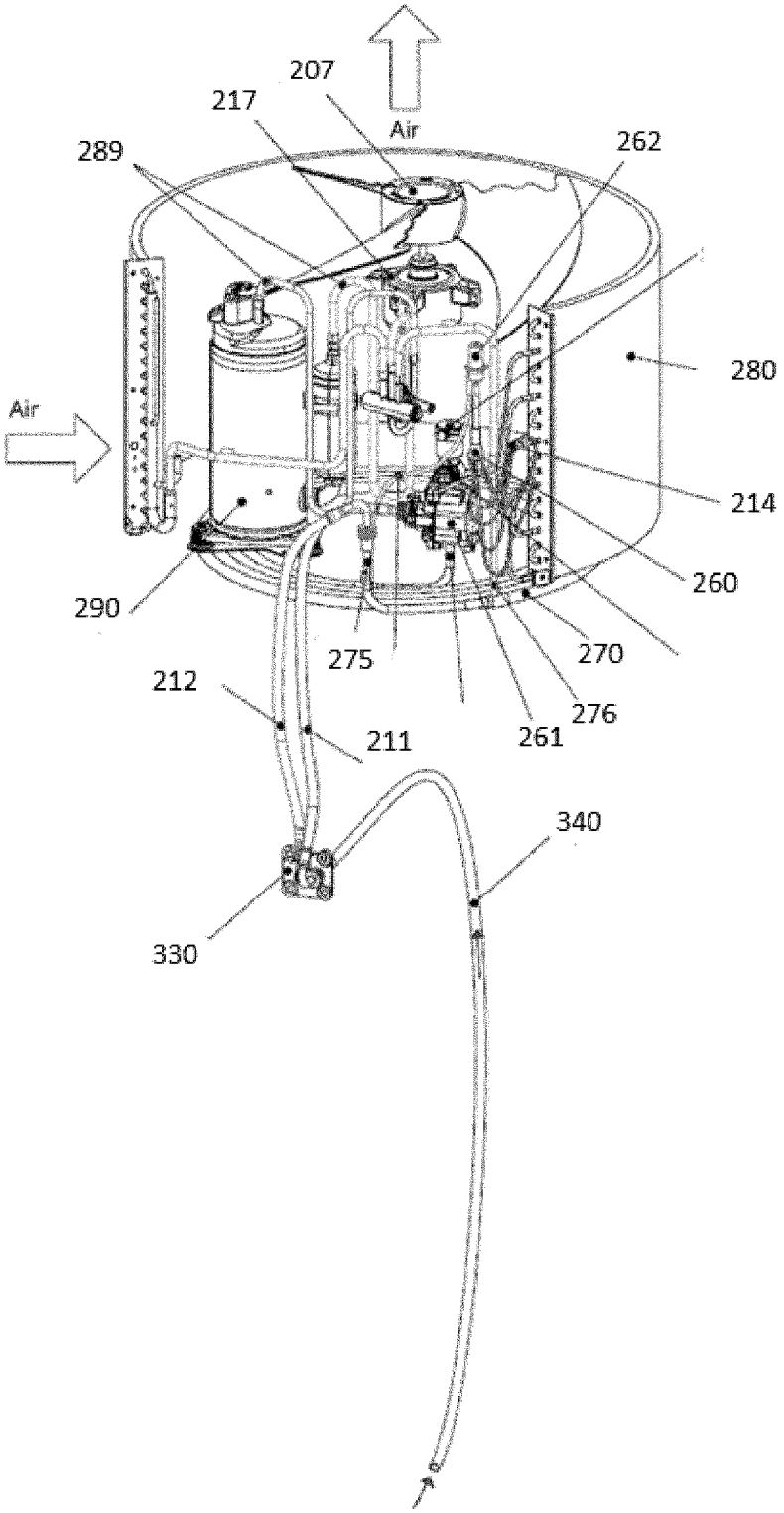
Air
207
217
289
262
280
Air
214
260
290
275
270
212
276
211
261
340
330

[Fig. 14]

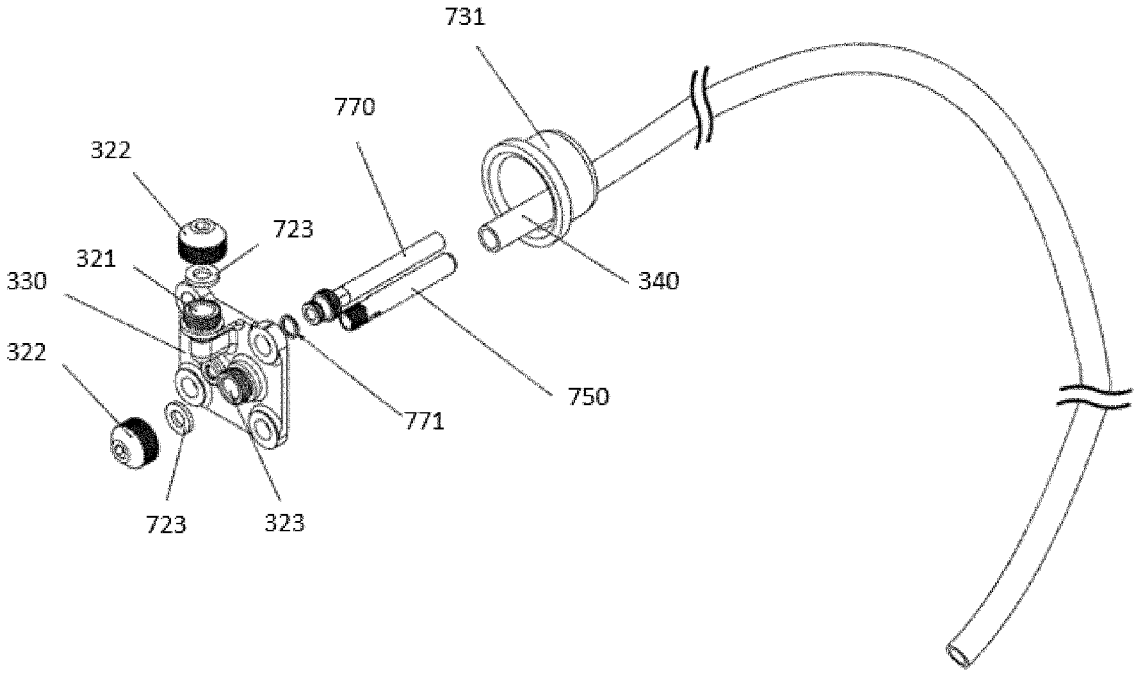

[Fig. 15a]

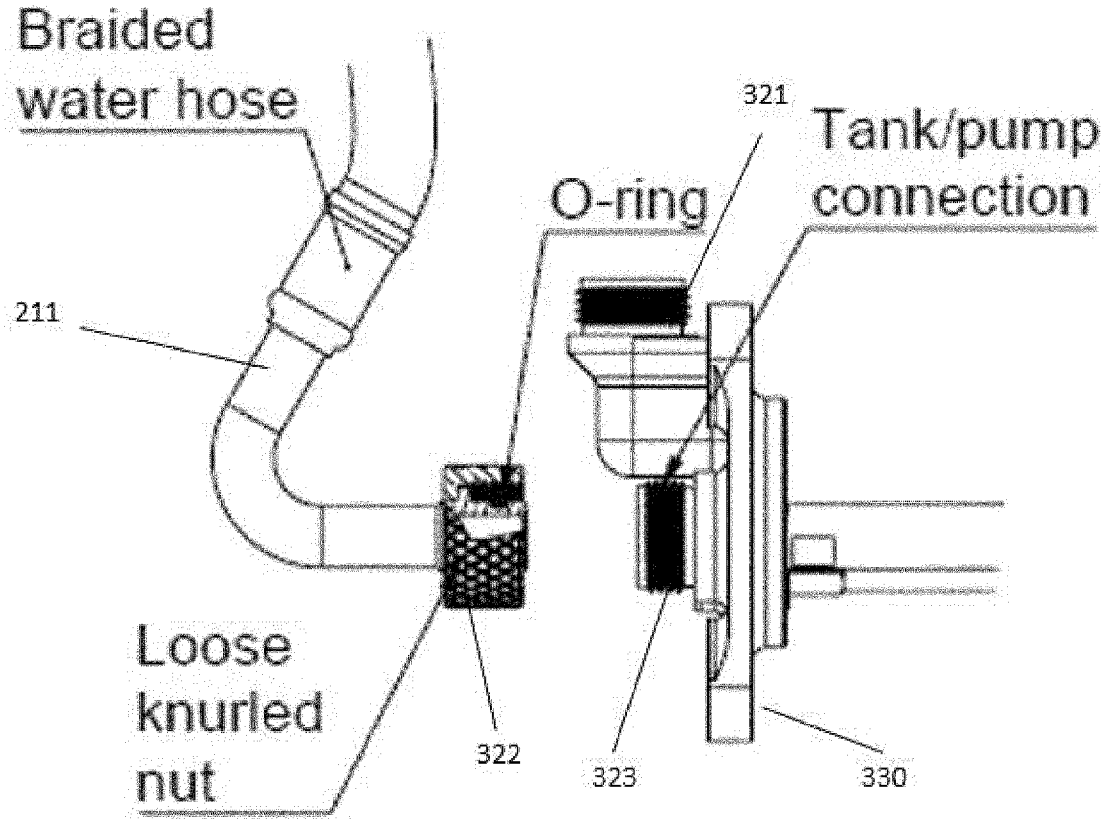

[Fig. 15b]

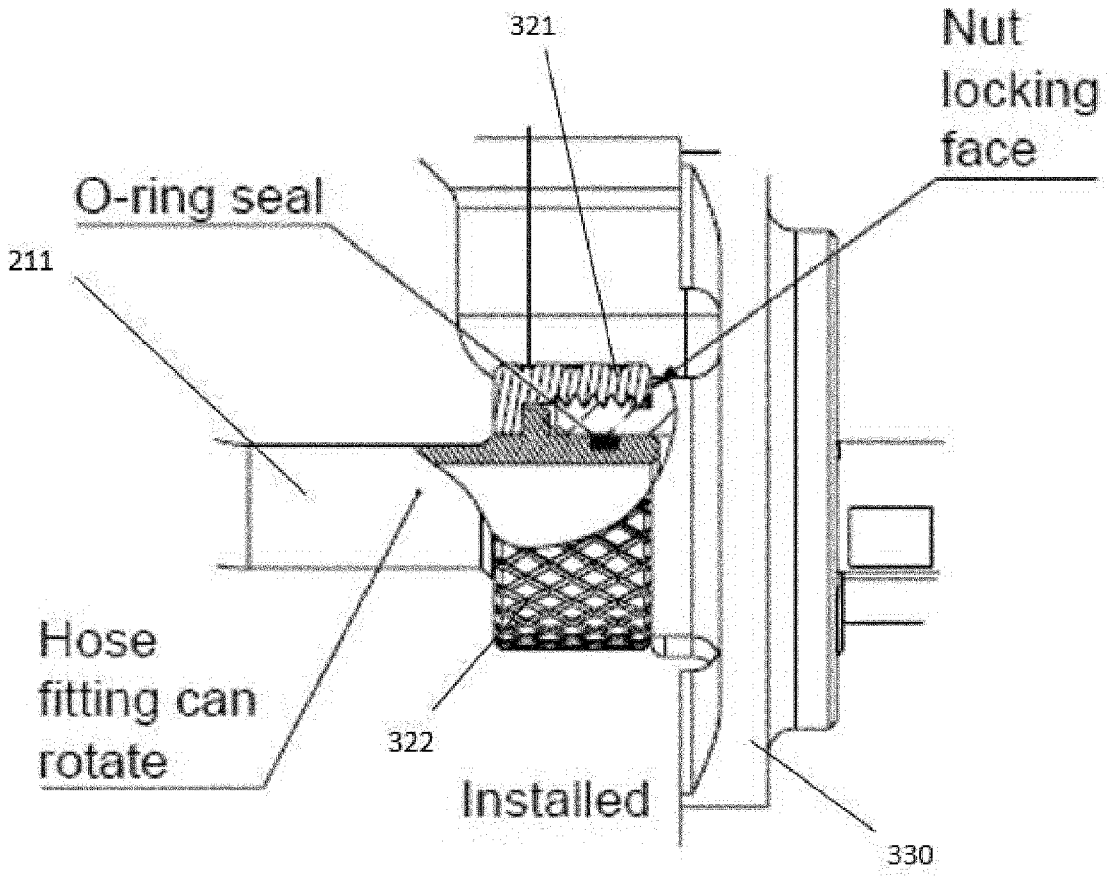
321
Nut
locking
face
O-ring seal
211
Hose
fitting can
rotate
322
Installed
330

[Fig. 16]

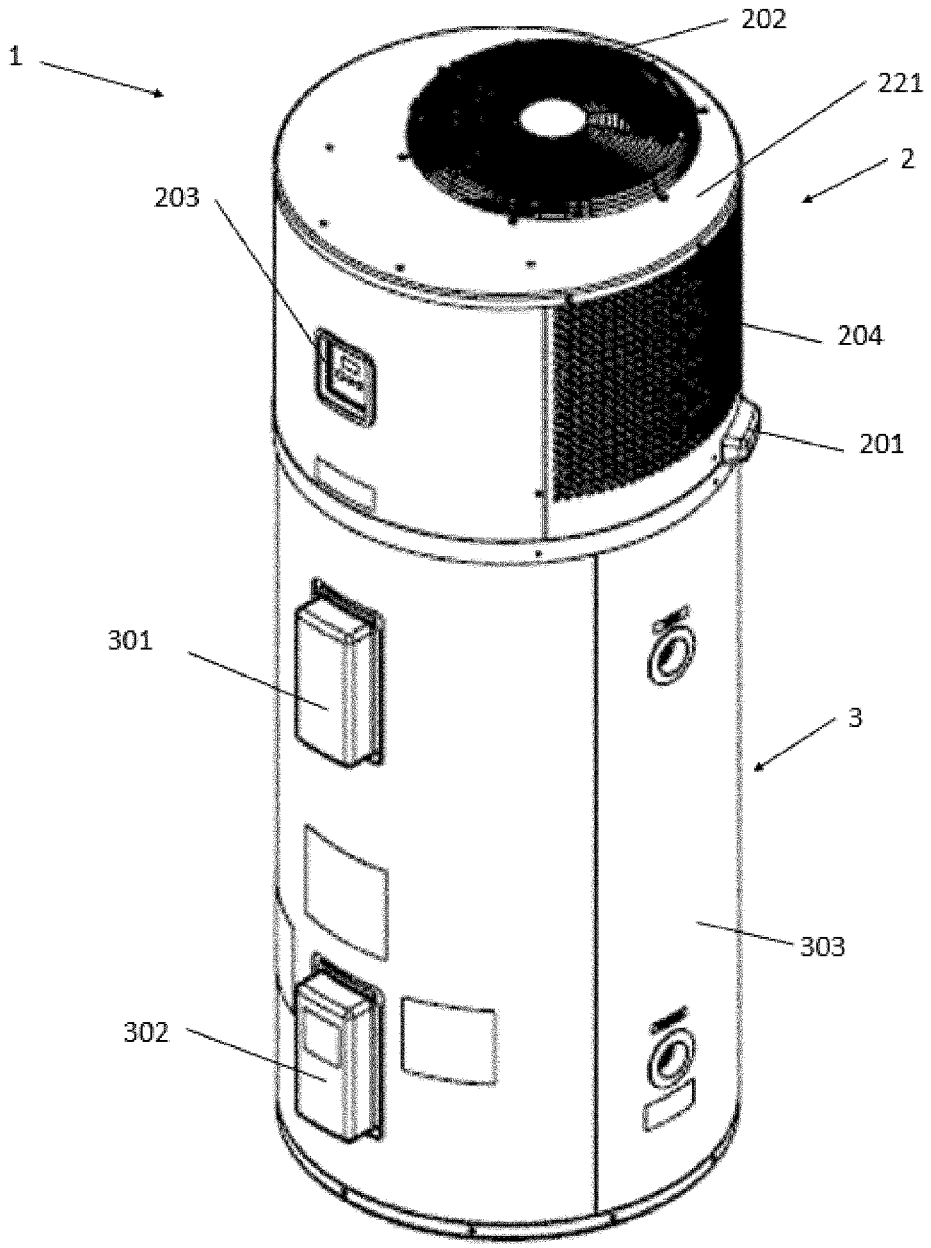

[Fig. 17a]

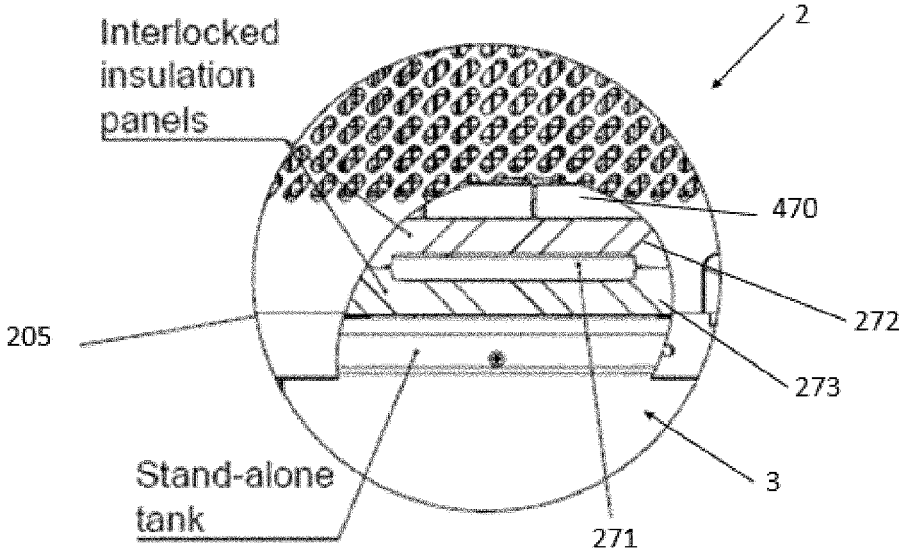

[Fig. 17b]

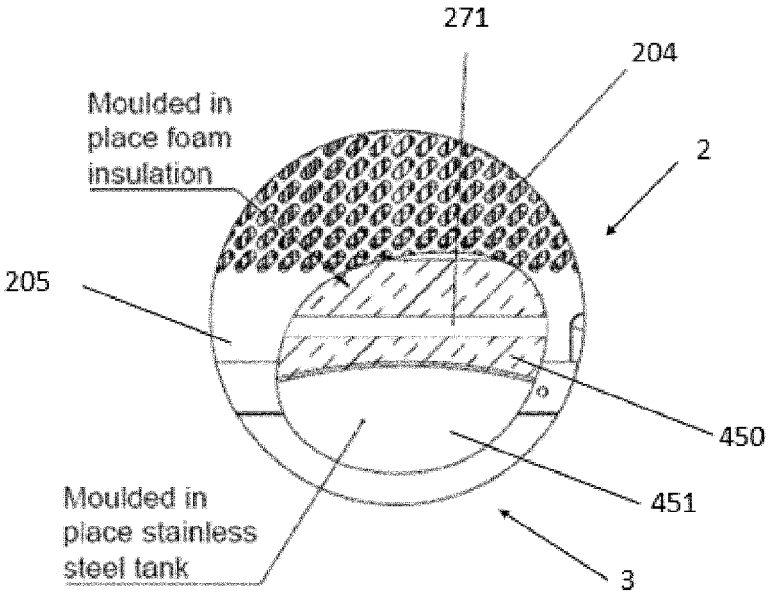

[Fig. 18a]

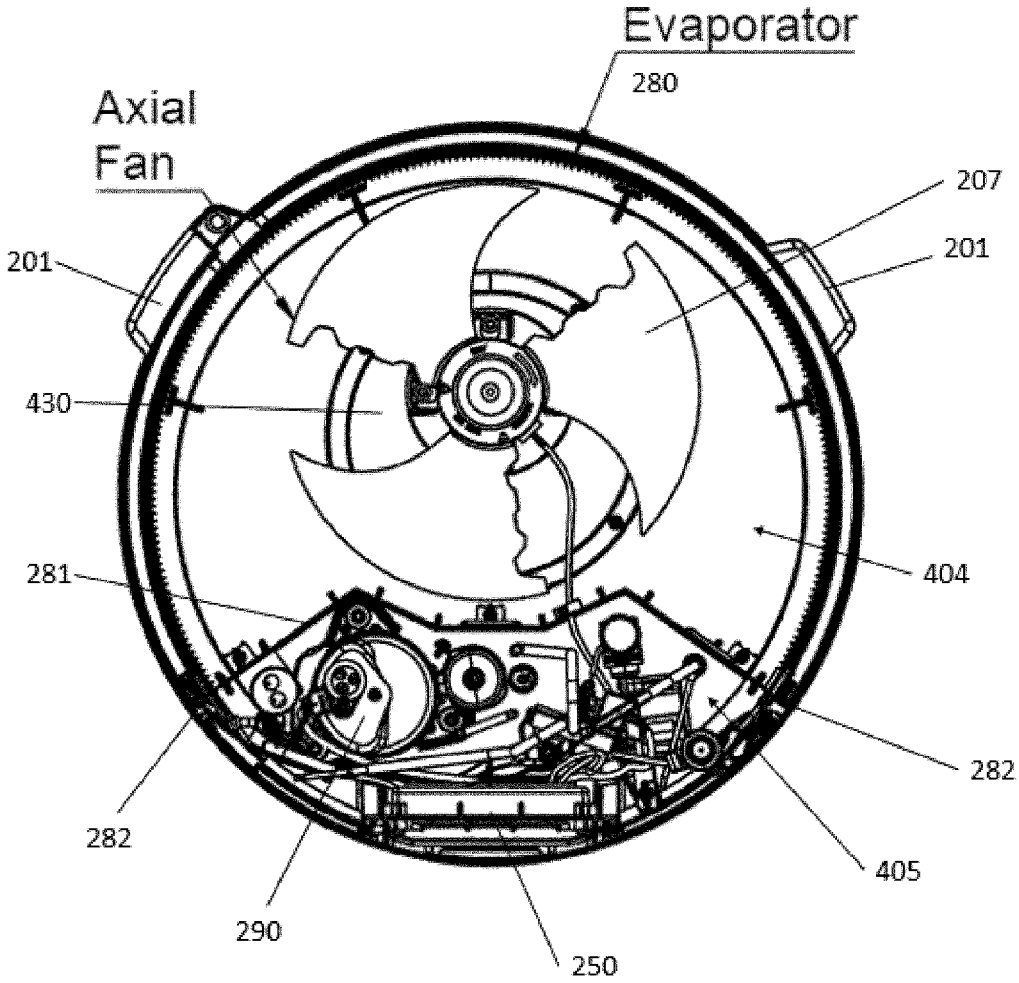
Evaporator
280
Axial
Fan
207
201
201
430
404
281
282
282
405
290
250

[Fig. 18b]

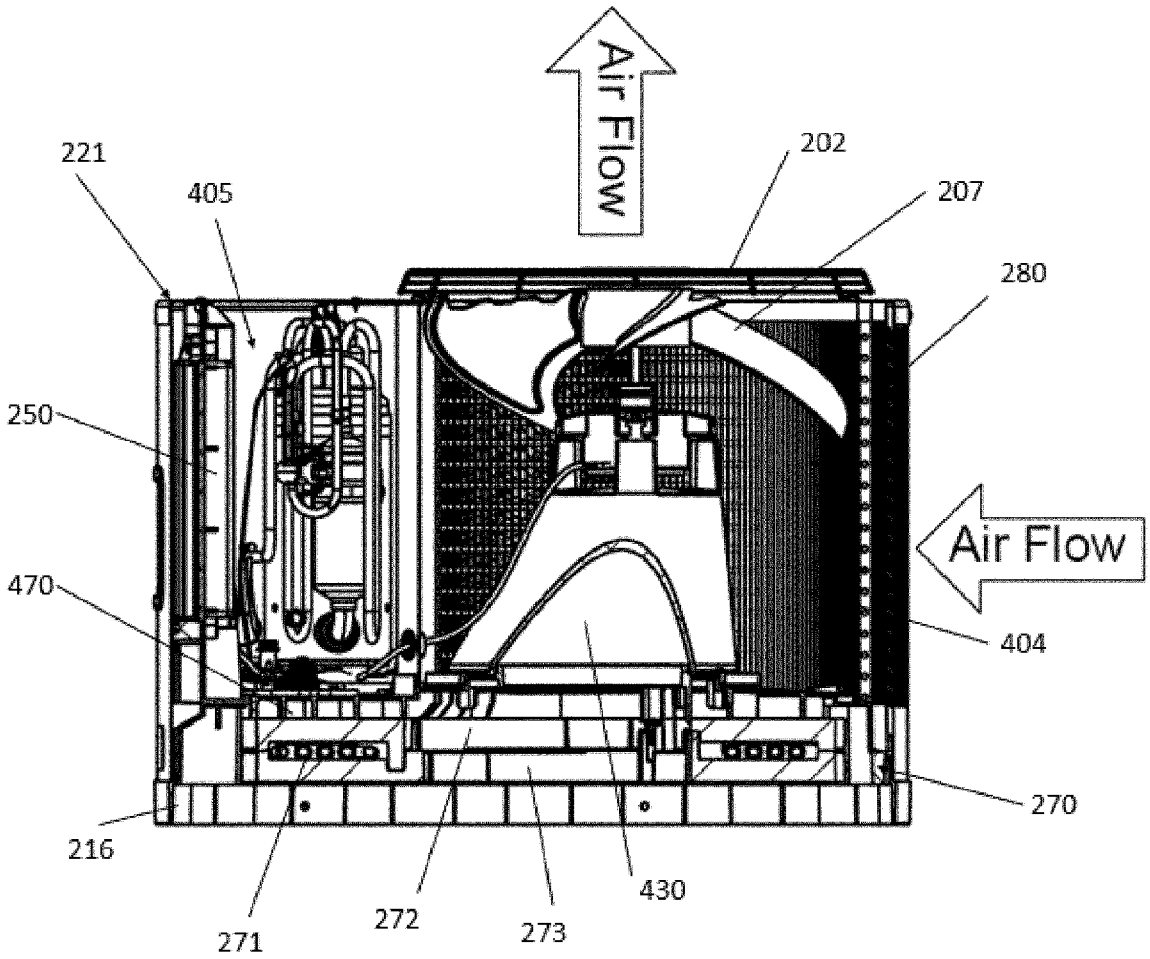
Air Flow
221
405
202
207
280
250
Air Flow
470
404
270
216
430
271
272
273

[Fig. 19a]

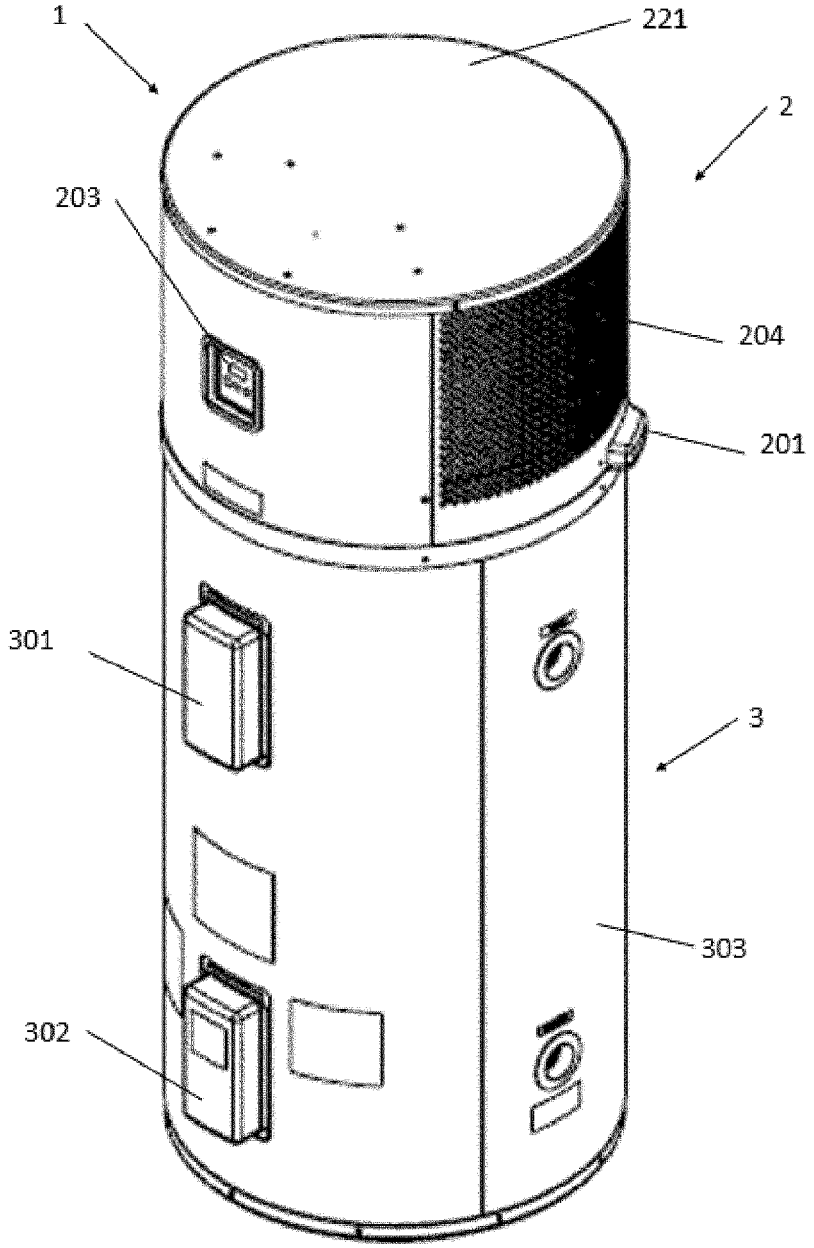

[Fig. 19b]

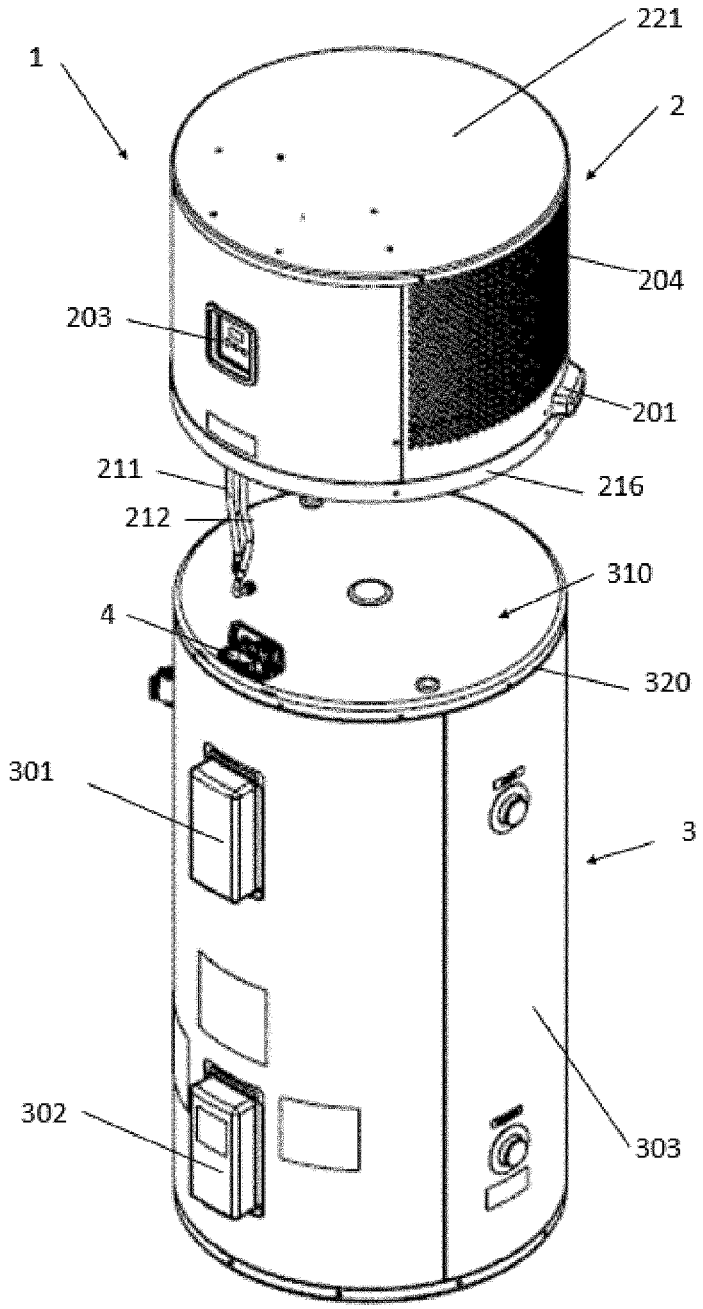

[Fig. 20a]

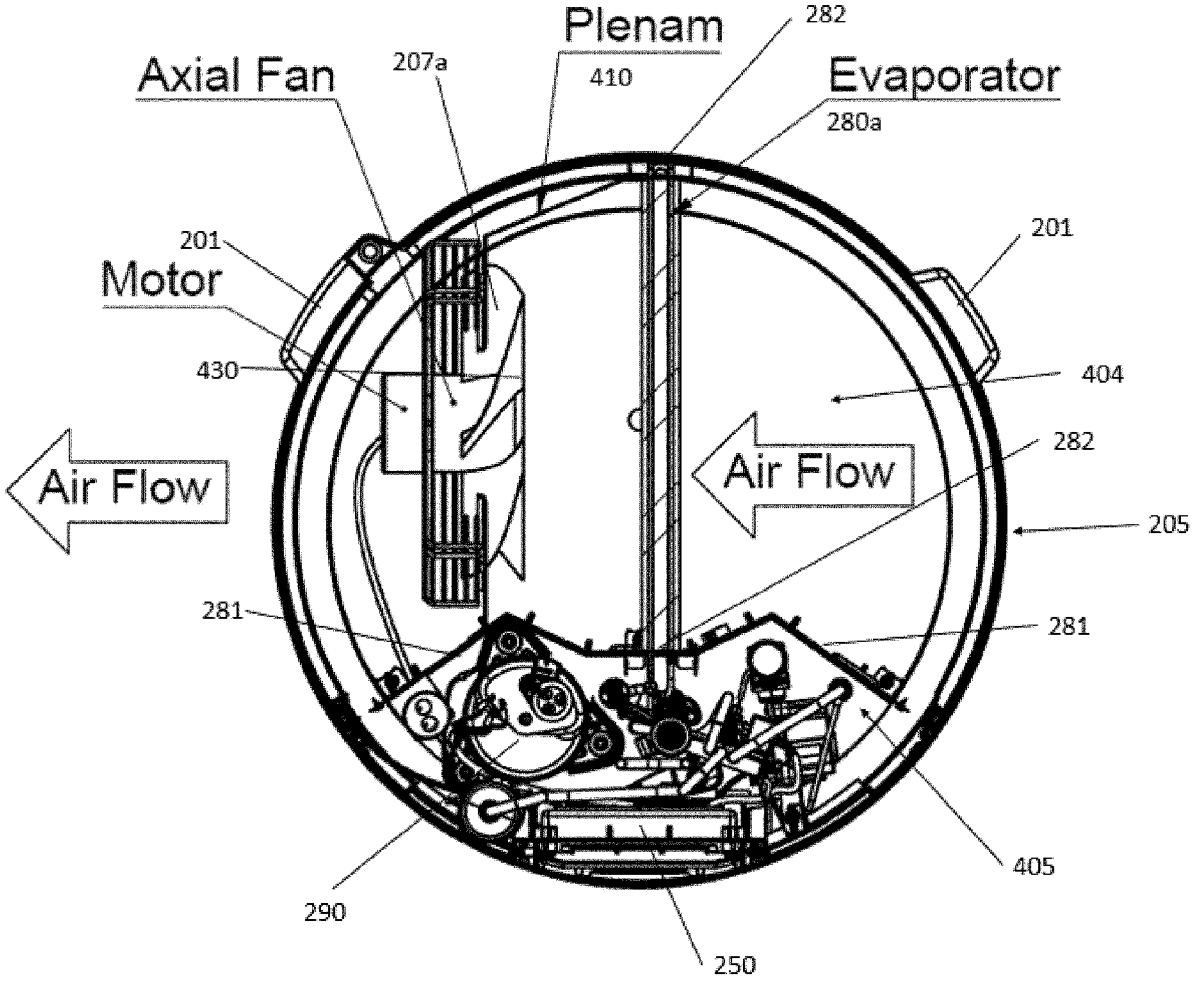

[Fig. 20b]

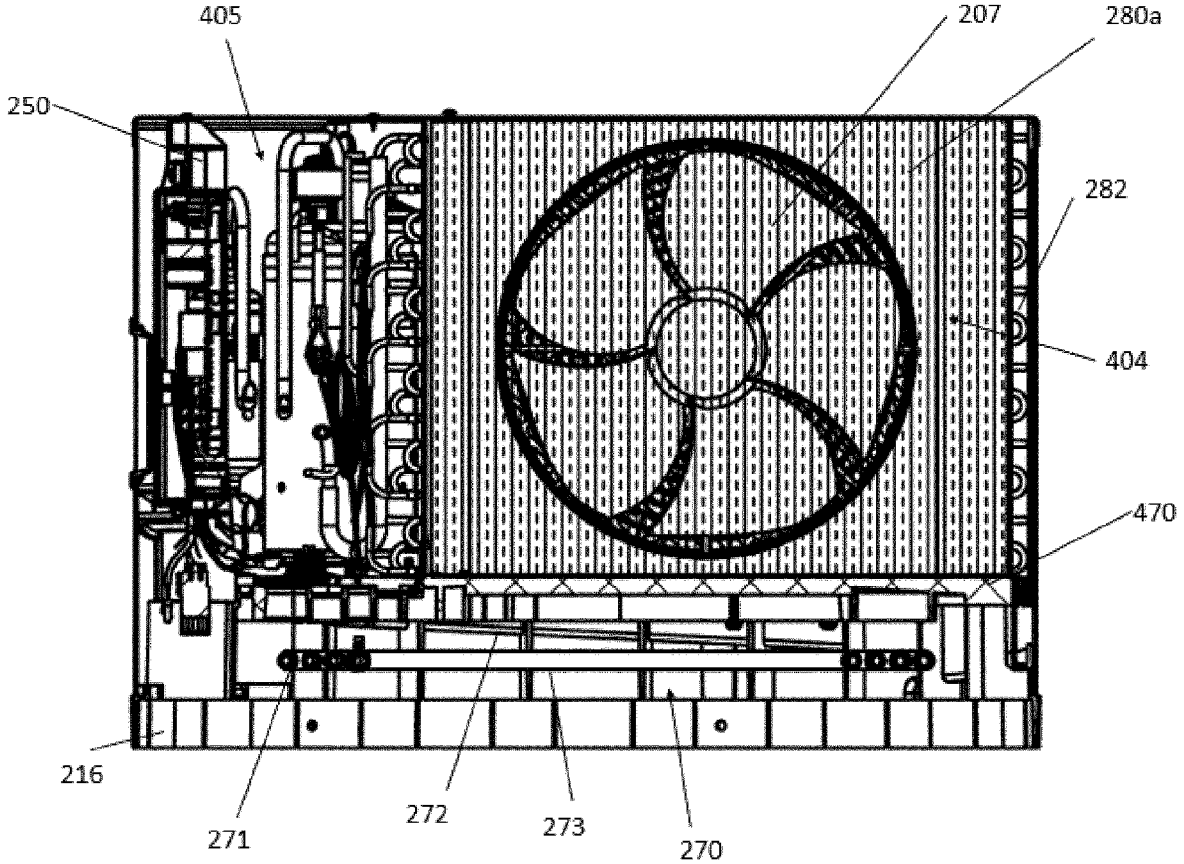

[Fig. 21a]

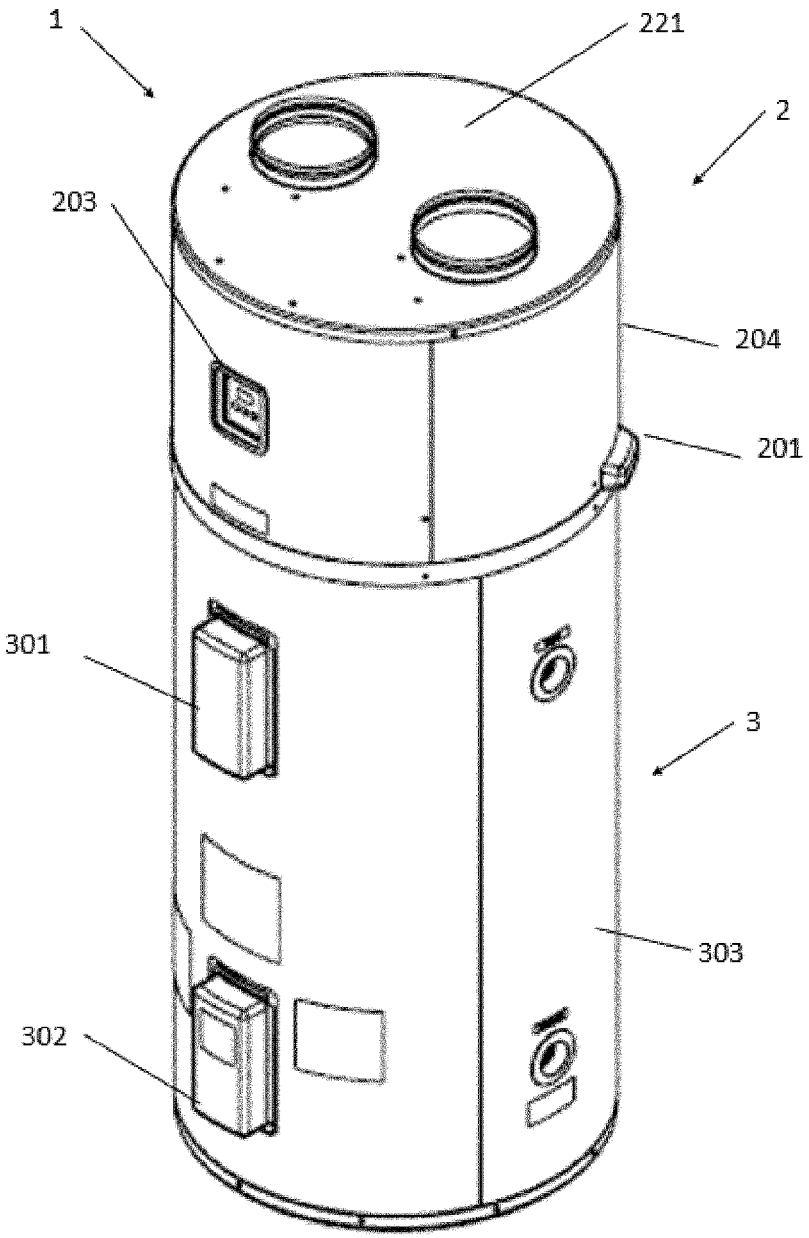

[Fig. 21b]

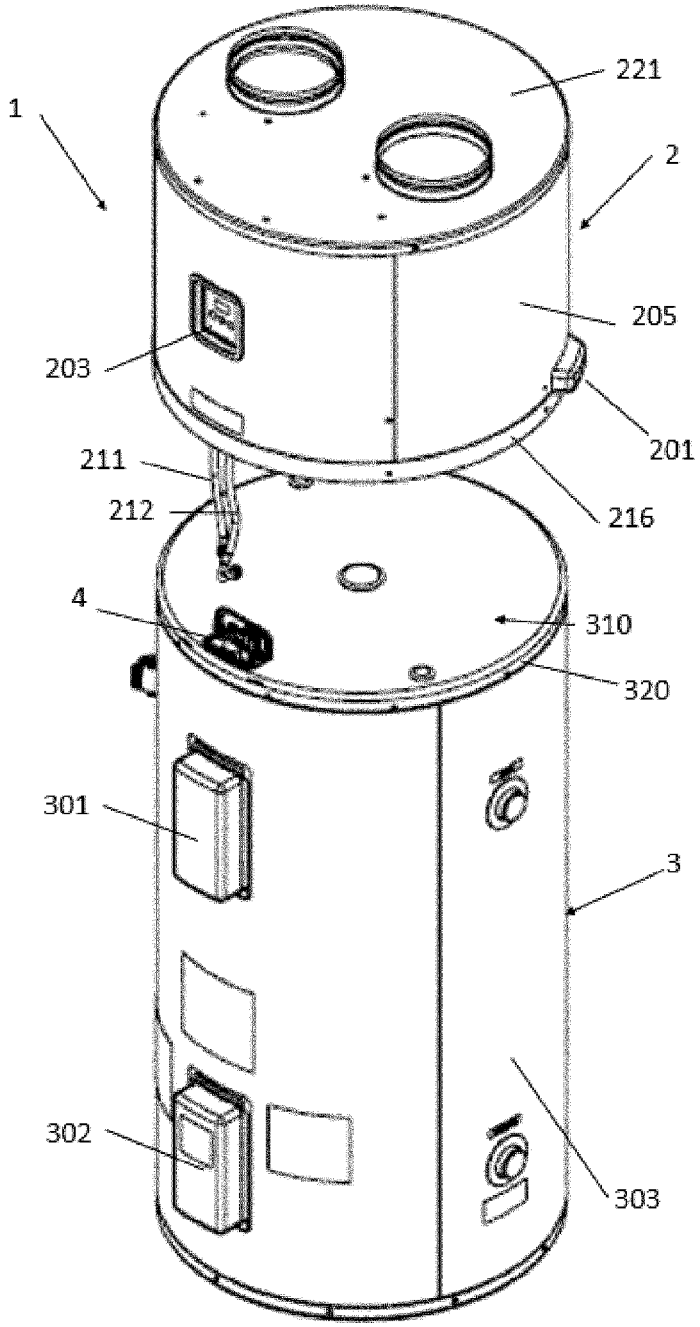

[Fig. 22a]

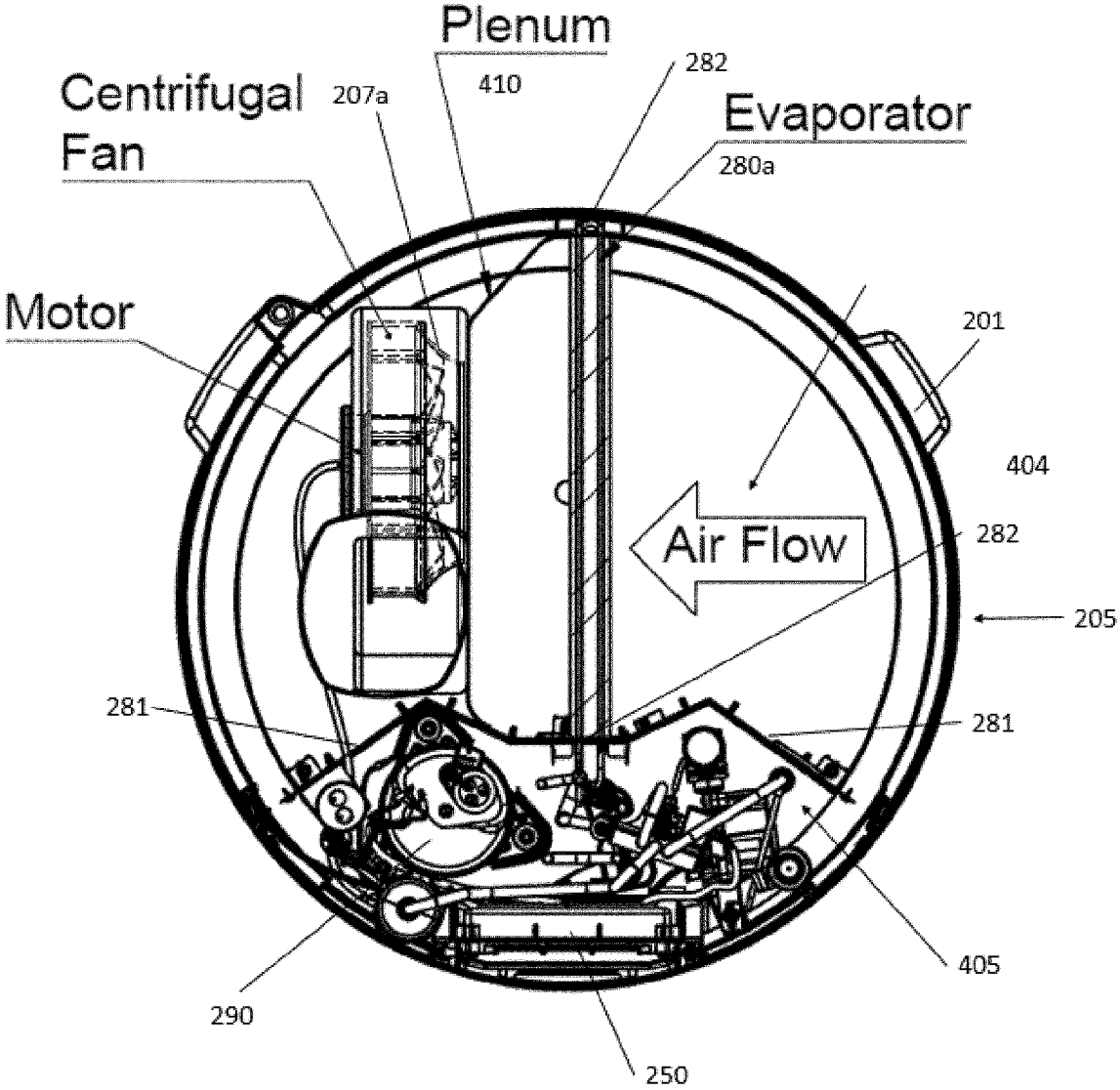
Plenum
410
282
Centrifugal Fan
207a
Evaporator
280a
Motor
201
404
Air Flow
282
205
281
281
405
290
250

[Fig. 22b]

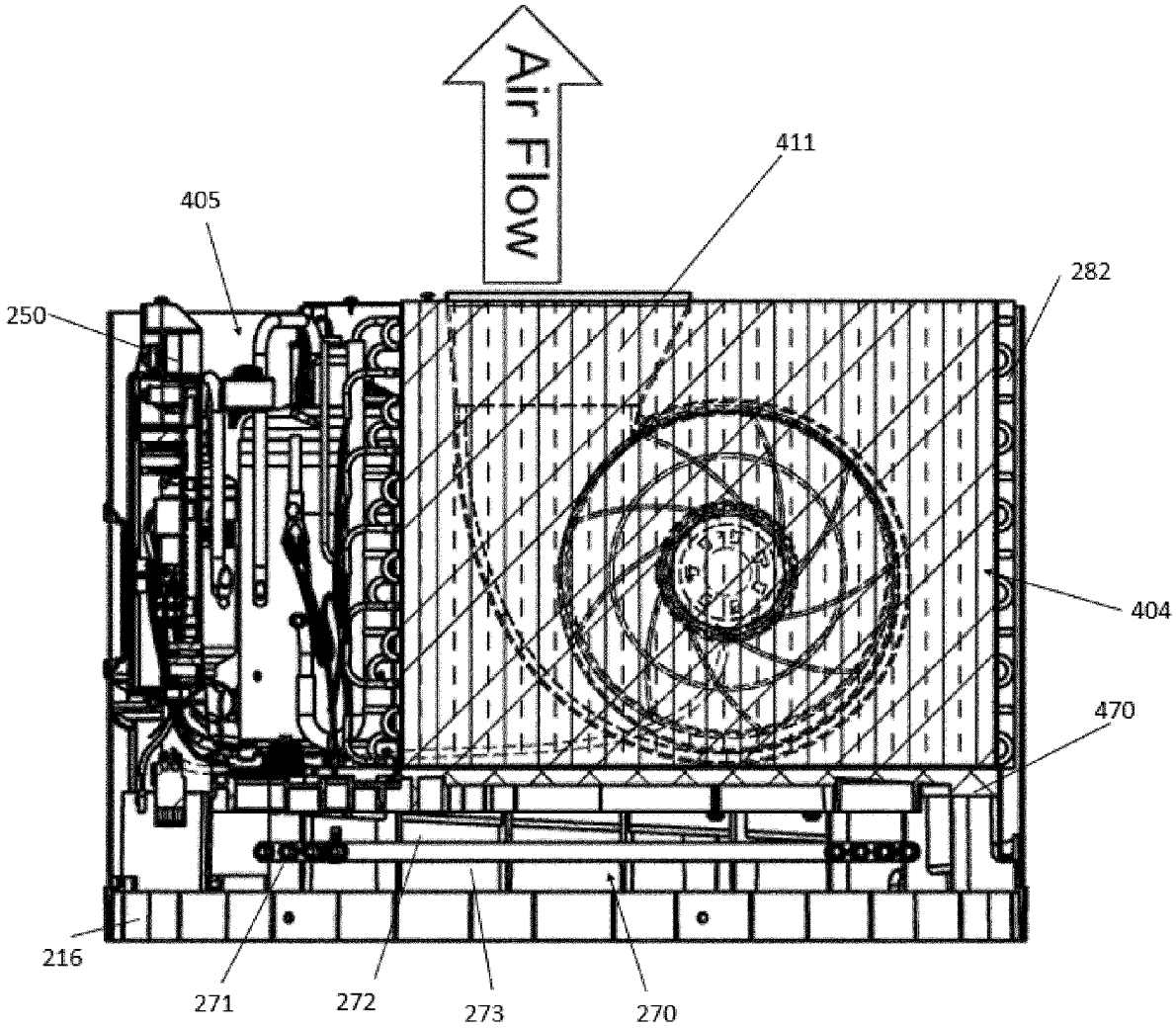

[Fig. 23a]

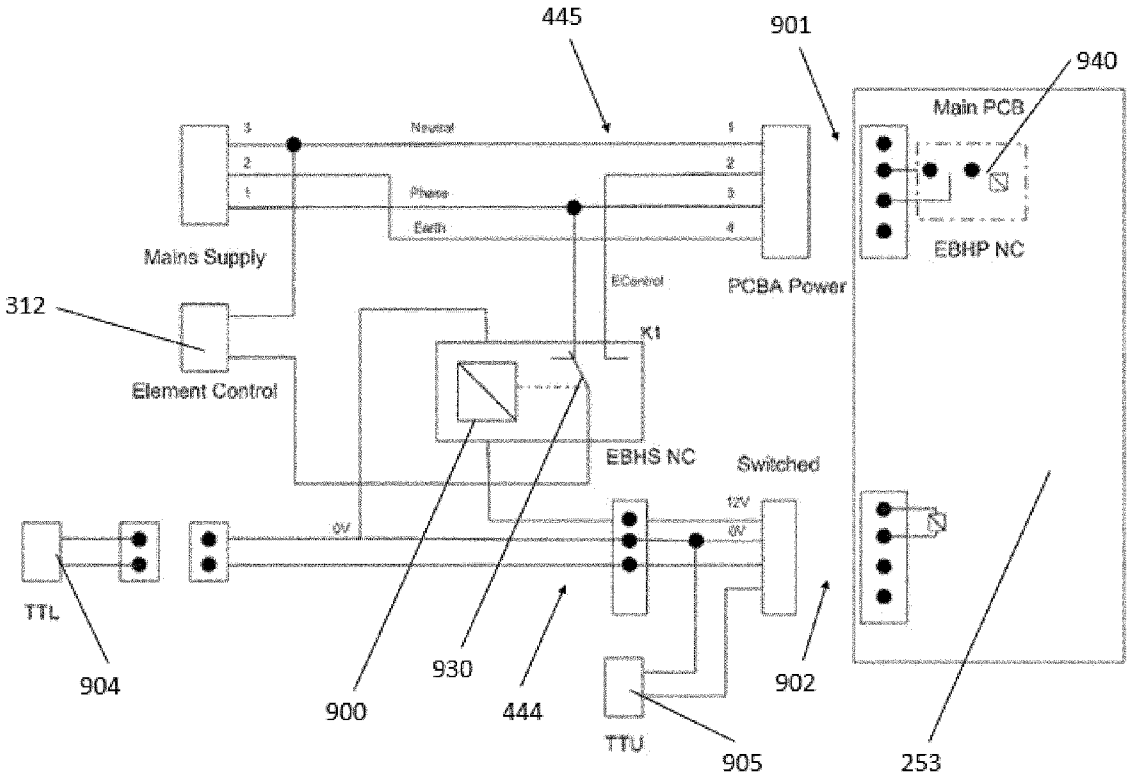

[Fig. 23b]

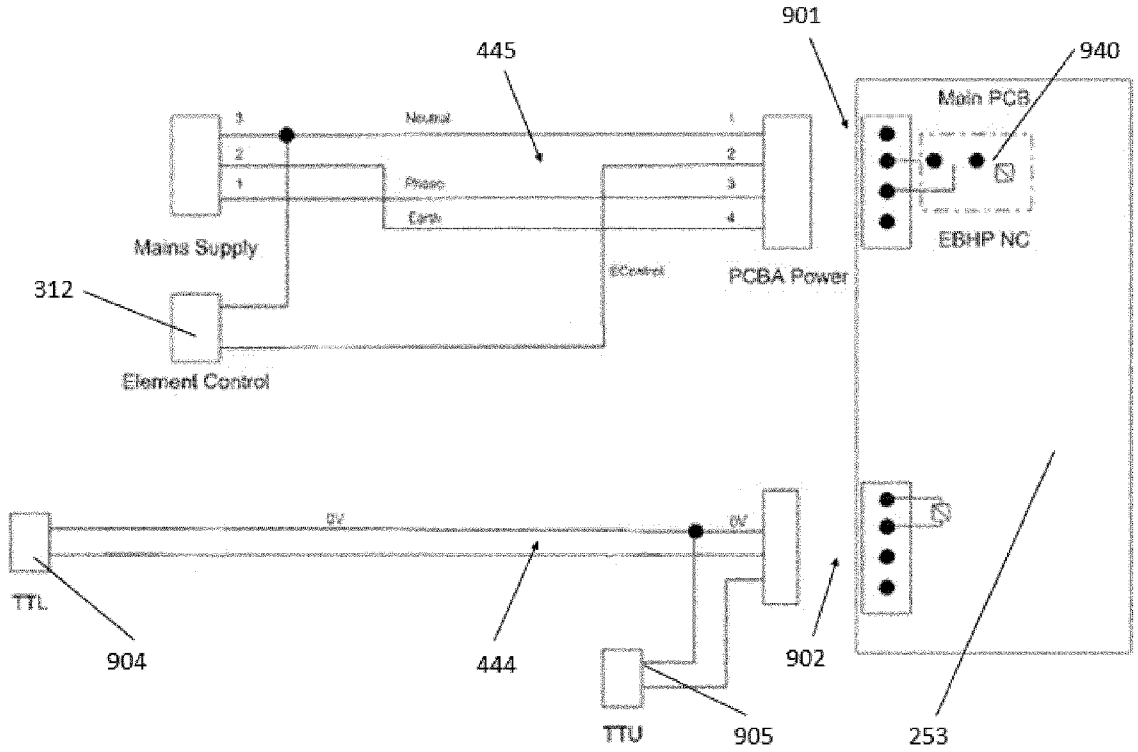
901
445
940
Main PCB
Neutral
Phase
Earth
Mains Supply
EBHP NC
PCBA Power
312
Element Control
0V
0V
TTL
904
444
902
TTU
905
253

INTERNATIONAL SEARCH REPORT

International application No
PCT/JP2024/018078

A. CLASSIFICATION OF SUBJECT MATTER

INV. F24H1/20 F24H4/04 F24H9/02 F24H9/14 F24H9/20
F25B30/02

ADD.

According to International Patent Classification (IPC) or to both national classification and IPC

B. FIELDS SEARCHED

Minimum documentation searched (classification system followed by classification symbols)

F24H F25B

Documentation searched other than minimum documentation to the extent that such documents are included in the fields searched

Electronic data base consulted during the international search (name of data base and, where practicable, search terms used)

EPO-Internal, WPI Data

C. DOCUMENTS CONSIDERED TO BE RELEVANT

Category*	Citation of document, with indication, where appropriate, of the relevant passages	Relevant to claim No.
X	US 2012/222631 A1 (LESAGE CLAUDE [CA] ET AL) 6 September 2012 (2012-09-06) paragraph [0015] - paragraph [0046]; figures 1-4c	1-18
X	WO 2022/183815 A1 (HEFEI MIDEA HEATING & VENTILATING EQUIPMENT CO LTD [CN] ET AL.) 9 September 2022 (2022-09-09) page 2 - page 7; figures 1-8	1,16
X	US 8 385 729 B2 (RHEEM MFG CO [US]; KLEMAN KELVIN W [US] ET AL.) 26 February 2013 (2013-02-26) column 3, line 45 - column 7, line 47; figures 1-2	1,16

-/--

[x] Further documents are listed in the continuation of Box C.

[x] See patent family annex.

* Special categories of cited documents :

"A" document defining the general state of the art which is not considered to be of particular relevance

"E" earlier application or patent but published on or after the international filing date

"L" document which may throw doubts on priority claim(s) or which is cited to establish the publication date of another citation or other special reason (as specified)

"O" document referring to an oral disclosure, use, exhibition or other means

"P" document published prior to the international filing date but later than the priority date claimed

"T" later document published after the international filing date or priority date and not in conflict with the application but cited to understand the principle or theory underlying the invention

"X" document of particular relevance;; the claimed invention cannot be considered novel or cannot be considered to involve an inventive step when the document is taken alone

"Y" document of particular relevance;; the claimed invention cannot be considered to involve an inventive step when the document is combined with one or more other such documents, such combination being obvious to a person skilled in the art

"&" document member of the same patent family

Date of the actual completion of the international search	Date of mailing of the international search report
2 September 2024	10/09/2024

Name and mailing address of the ISA/	Authorized officer
European Patent Office, P.B. 5818 Patentlaan 2 NL - 2280 HV Rijswijk Tel. (+31-70) 340-2040, Fax: (+31-70) 340-3016	Ast, Gabor

2

Form PCT/ISA/210 (second sheet) (April 2005)

INTERNATIONAL SEARCH REPORT

International application No
PCT/JP2024/018078

C(Continuation). DOCUMENTS CONSIDERED TO BE RELEVANT

Category*	Citation of document, with indication, where appropriate, of the relevant passages	Relevant to claim No.
A	US 11 506 420 B2 (RHEEM MFG CO [US]) 22 November 2022 (2022-11-22) column 3, line 44 - column 11, line 32; figures 1-10 -----	11,12
A	EP 3 907 440 A1 (PANASONIC IP MAN CO LTD [JP]) 10 November 2021 (2021-11-10) the whole document -----	1,16

2

INTERNATIONAL SEARCH REPORT

Information on patent family members

International application No
PCT/JP2024/018078

Patent document cited in search report	Publication date	Patent family member(s)	Publication date
US 2012222631 A1	06-09-2012	US 2012222631 A1	06-09-2012
		US 2015241087 A1	27-08-2015
WO 2022183815 A1	09-09-2022	CN 215260045 U	21-12-2021
		EP 4290142 A1	13-12-2023
		WO 2022183815 A1	09-09-2022
US 8385729 B2	26-02-2013	CA 2709062 A1	08-03-2011
		US 2011058795 A1	10-03-2011
		WO 2011031339 A1	17-03-2011
US 11506420 B2	22-11-2022	NONE	
EP 3907440 A1	10-11-2021	EP 3907440 A1	10-11-2021
		JP 7442044 B2	04-03-2024
		JP 2021177105 A	11-11-2021