(No Model.)

4 Sheets—Sheet 1.

J. IRISH.

EMBROIDERING MACHINE.

No. 456,573. Patented July 28, 1891.

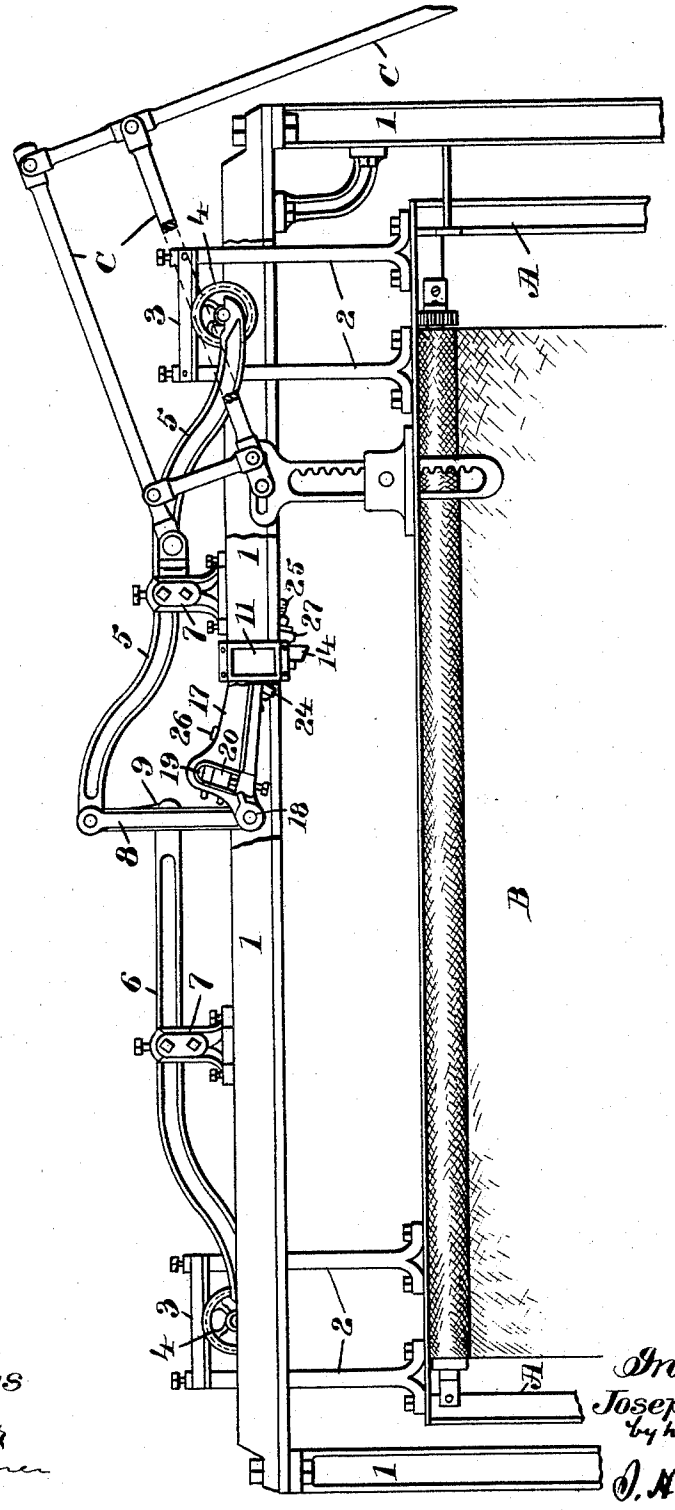

Fig. 1.

Witnesses
Wm. J. Tanner
N. J. Tanner

Inventor
Joseph Irish
by his attorney
D. A. Hubbard

THE NORRIS PETERS CO., PHOTO-LITHO., WASHINGTON, D. C.

(No Model.) 4 Sheets—Sheet 2.

J. IRISH.

EMBROIDERING MACHINE.

No. 456,573. Patented July 28, 1891.

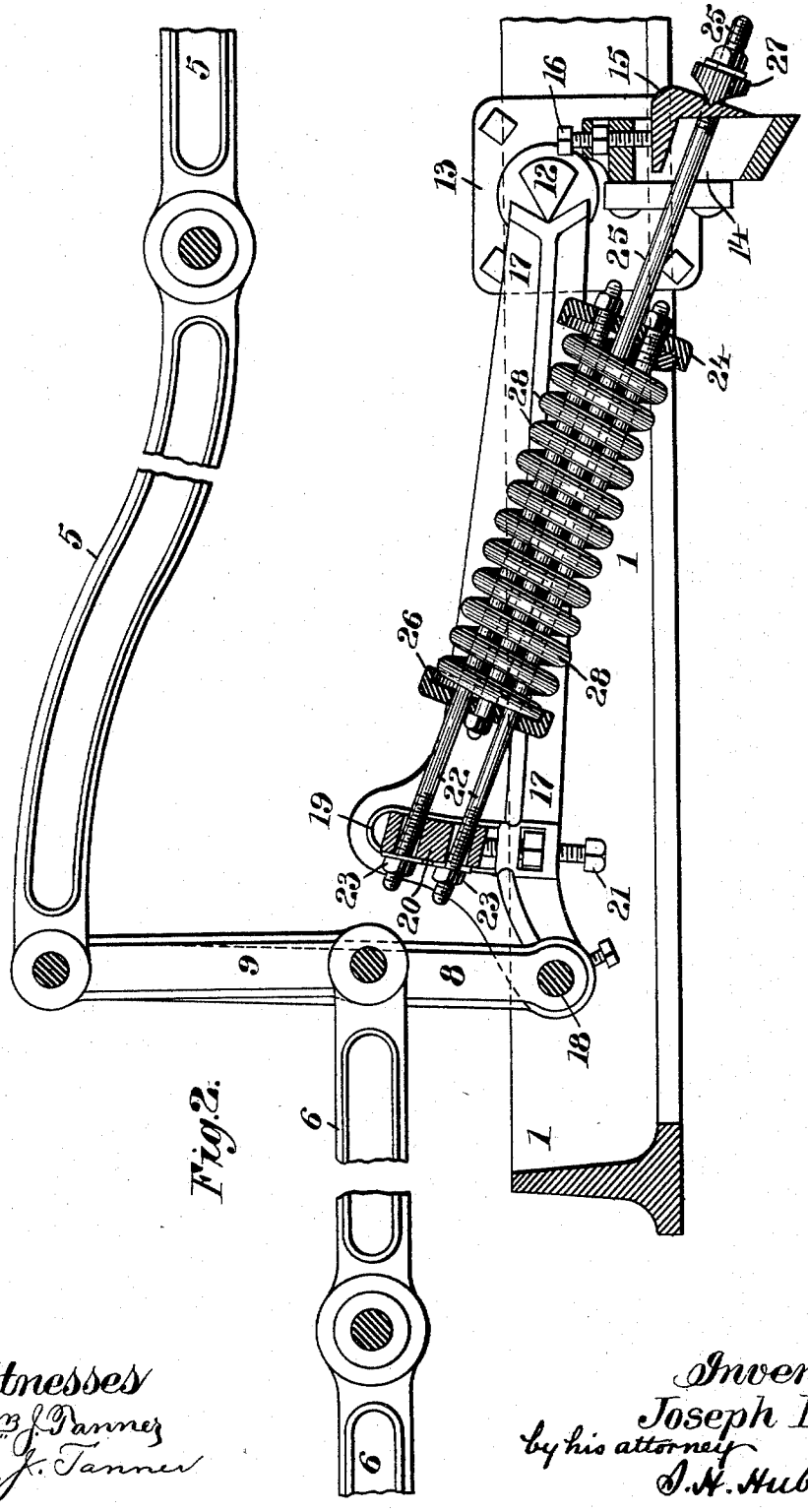

Fig. 2.

Witnesses
Wm. J. Tanner
A. J. Tanner

Inventor
Joseph Irish.
by his attorney
S. N. Hubbard

THE NORRIS PETERS CO., PHOTO-LITHO., WASHINGTON, D. C.

(No Model.) 4 Sheets—Sheet 3.

J. IRISH.

EMBROIDERING MACHINE.

No. 456,573. Patented July 28, 1891.

Fig. 3.

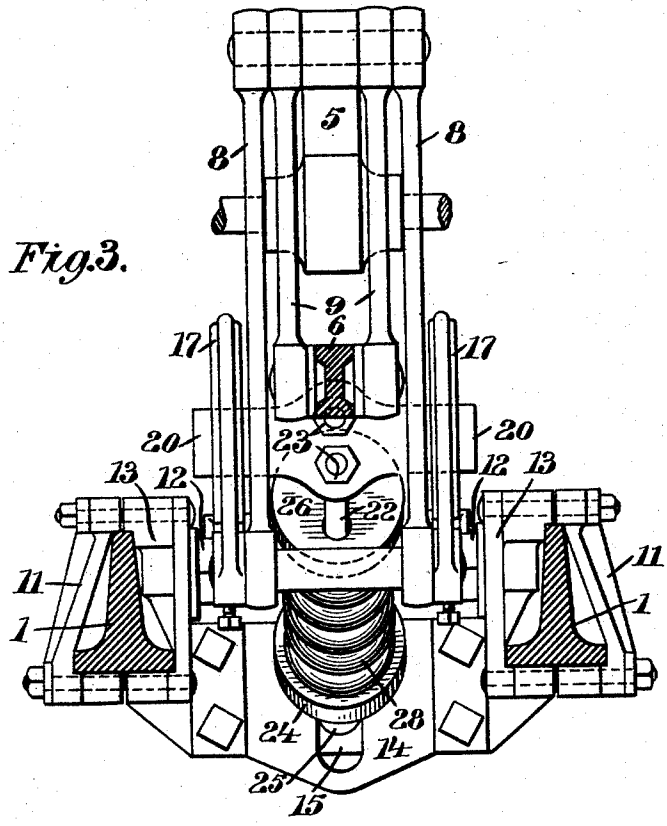

Fig. 4.

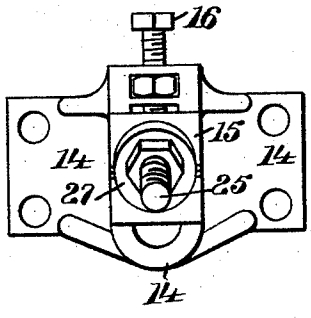

Witnesses
Wm. J. Tanner
A. J. Tanner.

Inventor
Joseph Irish.
by his attorney
D. H. Hubbard

THE NORRIS PETERS CO., PHOTO-LITHO., WASHINGTON, D. C.

(No Model.) 4 Sheets—Sheet 4.

J. IRISH.

EMBROIDERING MACHINE.

No. 456,573. Patented July 28, 1891.

Fig. 5.

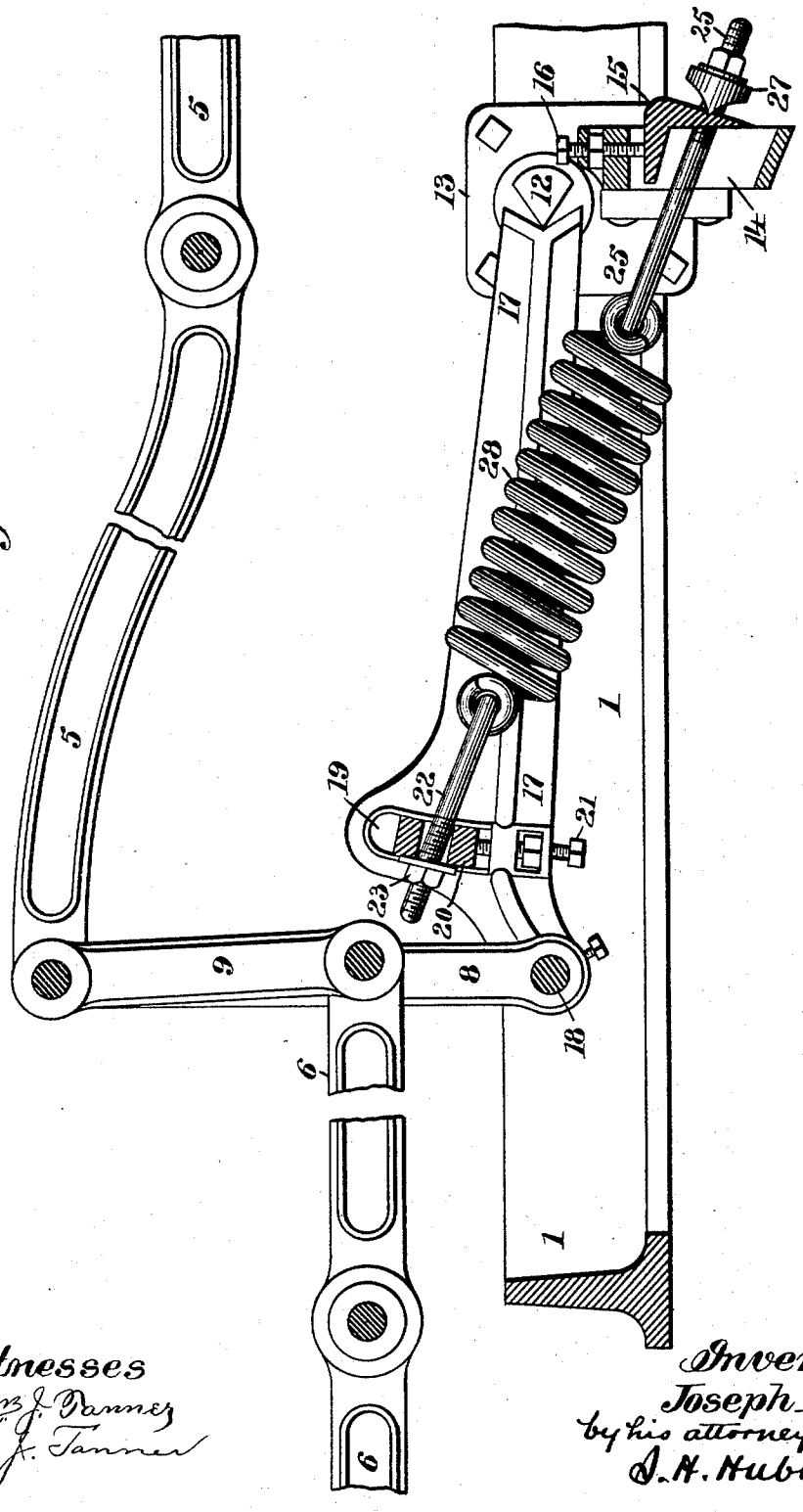

Witnesses
Wm. J. Tanner
A. J. Tanner

Inventor
Joseph Irish
by his attorney
D. H. Hubbard

THE NORRIS PETERS CO., PHOTO-LITHO., WASHINGTON, D. C.

UNITED STATES PATENT OFFICE.

JOSEPH IRISH, OF BRIDGEPORT, CONNECTICUT.

EMBROIDERING-MACHINE.

SPECIFICATION forming part of Letters Patent No. 456,573, dated July 28, 1891.

Application filed November 1, 1890. Serial No. 370,046. (No model.)

To all whom it may concern:

Be it known that I, JOSEPH IRISH, a citizen of the United States, residing at Bridgeport, in the county of Fairfield and State of Connecticut, have invented certain new and useful Improvements in Embroidering-Machines; and I do hereby declare the following to be a full, clear, and exact description of the invention, such as will enable others skilled in the art to which it appertains to make and use the same.

This invention relates to certain novel and useful improvements in embroidering-machines of which the well-known Swiss and Hamburg machines are types. In these machines a frame for the support of the fabric to be embroidered is so hung as to be freely movable in any direction within certain limits, and it has been usual in such machines to so counterbalance the frame by means of one or more weights that the operative may move it freely as the pattern requires without the exercise of undue strength. The weights heretofore employed are found disadvantageous for several reasons, but particularly because of the fact that when the frame is started their acquired inertia is apt to carry the frame beyond the point at which it is desired to stop it and when checked in its movement said weight imparts a slight vibratory or shaking movement to the frame.

It is the object of my present invention to dispense with the weight and to substitute in place thereof a spring counter-balance, which, while effectively taking up the weight of the frame, shall be free from the objections heretofore recited.

It is furthermore an object of my invention to arrange for the adjustment and regulation of the spring so as to vary its action and power according to the load imposed thereon; and with these ends in view my invention consists in the construction and combination of co-operative elements hereinafter fully explained and set forth, and then recited in the claims.

In order that such persons as are skilled in the art to which my invention appertains may fully understand its construction and method of operation, I will describe the same in detail, reference being had to the accompanying drawings, which form a part of this specification, and in which—

Figure 1 is a front elevation showing a part of an embroidery-machine equipped in accordance with my invention, the front girder being partially broken away; Fig. 2, a detail section taken longitudinally through the counter-balance, certain parts being shown in elevation; Fig. 3, a transverse section through the girders, showing the counter-balance in end elevation; Fig. 4, a detail end elevation of the bearing shown at the right of Fig. 2; Fig. 5, a modification of the construction shown at the preceding figures.

Like numerals and letters of reference denote the same parts in all the figures of the drawings.

Referring now more particularly to Fig. 1, A represents the embroidery-frame, upon which a roll of cloth is shown as stretched and denoted by the letter B. This frame is adapted to be raised and lowered and carried either to the right or left or moved in any direction within certain limits by means of a system of pantographic levers lettered C, and arranged and adapted to be operated in any ordinary or usual manner.

As the frame and the means for giving thereto the appropriate movements form no part of my present invention, it is thought unnecessary to enter into any detailed description of them in this specification.

1 represents longitudinally-extended girders, which are part of the supporting framework of the machine. These are two in number and are parallel.

2 are rectangular open hangers bolted or otherwise secured to the frame A and extending upward between the girders. The cross-bar 3 at the top of each of these hangers constitutes a track, which is supported and may move upon a wheel 4, whereby the limited longitudinal movement of the frame relative to these wheels may be had. This is the ordinary construction in machines of this class.

5 and 6 denote the counterbalance-levers, each carrying one of the wheels 4 upon its outer end. Said levers are fulcrumed near their centers upon brackets 7, supported upon the girders. From the extremity of the lever 5 depend a pair of links 8 of considerable length, and between these links, links 9 con-

nect the inner extremity of the lever 6 with the outer extremity of the lever 5. This construction appears at Fig. 3.

The base for the support of the counterbalancing device consists, as shown at Figs. 2 and 3, of a pair of clamps 11, which encircle and are firmly held upon the girders 1. Projecting inward from the side plates 13 of this base are two wedge-shaped fulcrums 12, and below these and supported between said plates is a slotted bearing-plate 14. (Shown at Figs. 2, 3, and 4.) An open housing 15 abuts against the rear surface of the plate 14, and is vertically adjustable relative thereto by means of a set-screw 16, as shown at Figs. 2 and 3.

17 denotes a pair of levers (although so secured together as to form a single element) whose outer extremities are pivoted, as at 18, to the lower ends of the links 8, and whose inner ends are dovetailed, as shown at Fig. 2, and rest against the edge of the wedge-shaped bearing-bar 12. Both of these levers are transversely slotted near one end, as shown at 19, and a block 20 extends across through the slots of both levers. By means of an adjusting-screw 21 this block may be held in any desired position in these slots.

22 are rods whose outer ends pass through the block 20 and are held as against longitudinal movement by nuts 23, and whose inner ends carry a head 24.

25 is a rod extending inward between the rods 22 from the opposite direction. It passes loosely through the head 24 and carries a head 26 upon its inner end, through which in like manner the rods 22 pass freely. The outer end of this rod 25 extends through the bearing-plate 14 and housing 15 and carries a wedge-shaped rocker 27, whose edge is seated in a transverse notch formed in the rear face of the housing.

28 is a spiral spring, which is compressed lengthwise between the heads 24 and 26 and surrounds the three rods 22 25.

From the foregoing description it will be observed that when the frame is lowered and the inner ends of the levers 5 6 raised the two levers 17 will be raised as to their outer ends upon their fulcrum-point against the bearing 12. As such a movement necessarily increases the distance between the rocker 27 and the block 20, it follows that whenever the fabric-frame is lowered the spring 28 will be compressed between the heads 24 26 in proportion to the distance traversed by the frame. When the direction of movement of the frame is reversed and it is raised, the expanding action of the spring in its effort to return to its normal position will assist the the attendant in raising the frame. In practice the strength of the spring is so adjusted relative to the weight of the frame as to practically counterbalance the latter; but in order that any slight differences between the strength of the spring and the weight of the frame may be equalized I have provided the adjustments at each end of the spring—namely, the screws 16 21—by means of which either the housing 15 may be raised and lowered at the rear of the plate 14 or the block 20 may be moved in the slots of lever 17, wherein it is seated. In addition to these adjustments the spring may be further varied in strength by means of the nuts which are shown upon the ends of the rods.

In Fig. 5 I have shown a modification of the construction in the preceding figures. This consists simply in the substitution for the compression-spring of a spring adapted to operate by extension. Its mode of action being simply a reversal of that of the spring shown in the other views, it is thought that no further description thereof is needed.

In this my invention I do not wish to be confined to the precise details of construction herein shown and described, since these may be freely changed and widely varied without departing from the essentials of my invention which I deem to be commensurate with the terms of the clauses of claims here following.

I claim—

1. In an embroidering-machine, the combination, with the counterbalance-levers, of a spring interposed between said levers and some fixed parts of the machine, and means for effecting the compression and for regulating the expansion of said spring in direct proportion to the movement of said counterbalance-levers, substantially as described.

2. In a machine of the character described, the combination, with the fixed frame-work, the movable cloth-holding frame, and the counterbalance-levers, of the compressible and expansible spring interposed between the fixed frame-work and the counterbalance-levers, and means, as described, whereby said spring is acted upon by said levers and in turn acts upon said levers, substantially as described.

3. The combination, in a machine of the character described, with the fixed frame-work, the movable fabric-holding frame, and the counterbalance-levers, of a spiral spring, a fixed bearing for one end of the spring, and a movable lever connected to the counterbalance-levers and provided with a bearing for the other end of the spring, substantially as described.

4. The combination, in a machine of the character described, with the fixed frame-work, the counterbalance-levers, and the movable frame, of the compressible spring having a fulcrum bearing in the fixed frame for one end thereof, a lever also fulcrumed to the fixed frame and provided with a bearing for the other end of the spring, and suitable connections between said lever and the counterbalance-levers, substantially as described.

5. In a machine of the character described, the combination, with the fixed frame-work, the movable frame for holding the fabric, and the counterbalance-levers, of the spiral spring,

the compressing-rods extending through said spring in opposite directions, a rocking fulcrum for one of said rods on the fixed frame, a lever fulcrumed to the frame and having a seat for the other compressing-rods, and a connection between said lever and the counterbalance-levers, all arranged as described, and for the purpose specified.

6. In a machine of the character described, the combination, with the movable frame and the counterbalance-levers, of a lever having a bearing on the frame and connected to said counterbalance-levers, and a compression-spring connected to and acted upon by said lever in one direction and adapted in turn to act upon said lever by expansion, substantially as described.

7. The combination, with the girders forming part of the permanent frame-work, of the base supported between said girders, the levers 17, fulcrumed to the base, suitable connections between the levers 17 and the counterbalance-levers, and the spring and rods interposed between the base and levers, substantially as and for the purpose specified.

8. The combination, with the counterbalance-levers, of the levers 17, fulcrumed to a fixed base, and the spring connected by a rocking fulcrum to the fixed base as to one end and to the levers as to the other end, whereby the length between the spring-bearings is determined and varied by the position of the levers 17, substantially as described.

In testimony whereof I affix my signature in presence of two witnesses.

JOSEPH IRISH.

Witnesses:

SHERMAN HARTWELL HUBBARD,

M. C. HINCHCLIFFE.